u-blox Cellular Modules

Data and Voice Modules

AT Commands Manual

Abstract
Description of standard and proprietary AT commands used with u-blox cellular modules.

www.u-blox.com
UBX-13002752 - R61

Document Information		
Title	u-blox Cellular Modules	
Subtitle	Data and Voice Modules	
Document type	AT Commands Manual	
Document number	UBX-13002752	
Revision and date	R61	15-Feb-2019
Disclosure restriction		

u-blox reserves all rights to this document and the information contained herein. Products, names, logos and designs described herein may in whole or in part be subject to intellectual property rights. Reproduction, use, modification or disclosure to third parties of this document or any part thereof without the express permission of u-blox is strictly prohibited.
The information contained herein is provided “as is” and u-blox assumes no liability for the use of the information. No warranty, either express or implied, is given, including but not limited, with respect to the accuracy, correctness, reliability and fitness for a particular purpose of the information. This document may be revised by u-blox at any time. For most recent documents, visit www.u-blox.com.
Copyright © 2018, u-blox AG
u-blox is a registered trademark of u-blox Holding AG in the EU and other countries.

Preface

Applicable products

This document applies to the following products:

Name	Type number	Modem version	Application version	PCN reference
LARA-R202	LARA-R202-02B-00	30.42	A01.00	UBX-17057959
	LARA-R202-02B-01	30.42	A01.01	UBX-18018067
LARA-R203	LARA-R203-02B-00	30.39	A01.00	UBX-17048311
	LARA-R203-02B-01	30.39	A01.02	UBX-18018067
LARA-R204	LARA-R204-02B-00	31.34	A01.00	UBX-17012269
	LARA-R204-02B-01	31.35	A01.03	UBX-18013471
	LARA-R204-02B-02	31.37	A01.00	UBX-18046834
LARA-R211	LARA-R211-02B-00	30.31	A01.00	UBX-17012270
	LARA-R211-02B-01	30.49	A01.01	UBX-17054295
	LARA-R211-02B-02	30.49	A01.02	UBX-18057549
LARA-R220	LARA-R220-62B-00	30.44	A01.03	UBX-17061668
	LARA-R220-62B-01	30.44	A01.04	UBX-18050698
LARA-R280	LARA-R280-02B-00	30.43	A01.01	UBX-17063950
	LARA-R280-02B-01	30.43	A01.02	UBX-18018067
	LARA-R280-02B-02	30.43	A01.03	UBX-18052020
LEON-G100	LEON-G100-06S-02	07.60.17		UBX-13005361
	LEON-G100-07S-01	07.92		UBX-13005361
	LEON-G100-08S-01	07.92		UBX-13005361
LISA-U100	LISA-U100-01S-00	11.40		UBX-TN-12008
LISA-U110	LISA-U110-01S-00	11.40		UBX-TN-12008
	LISA-U110-50S-00	11.46		UBX-TN-12081
	LISA-U110-60S-00	11.43		UBX-TN-12050
LISA-U120	LISA-U120-01S-00	11.40		UBX-TN-12008
	LISA-U120-01S-01	11.50		UBX-13002821
LISA-U130	LISA-U130-01S-00	11.40		UBX-TN-12008
	LISA-U130-60S-00	11.43		UBX-TN-12050
LISA-U200	LISA-U200-00S-00	21.21	-	UBX-TN-12009
	LISA-U200-01S-00	22.40	-	UBX-TN-12040
	LISA-U200-01S-01	22.40	A01.00	UBX-14005764
	LISA-U200-01S-02	22.40	A01.02	UBX-17048820
	LISA-U200-01S-03	22.40	A01.03	UBX-18055867
	LISA-U200-02S-01	22.90	A01.01	UBX-14005768
	LISA-U200-02S-02	22.90	A01.03	UBX-17048820
	LISA-U200-03S-00	23.41	A01.01	UBX-15020745
	LISA-U200-03S-01	23.41	A01.04	UBX-17048820
	LISA-U200-03S-02	23.41	A01.05	UBX-18055867
	LISA-U200-52S-01	22.86	A01.01	UBX-14005768
	LISA-U200-52S-02	22.86	A01.03	UBX-17048820
	LISA-U200-52S-03	22.86	A01.04	UBX-18055867
	LISA-U200-62S-01	22.90	A01.01	UBX-14005768
	LISA-U200-62S-02	22.90	A01.02	UBX-16017712

Name	Type number	Modem version	Application version	PCN reference
	LISA-U200-62S-03	22.90	A01.03	UBX-17048820
	LISA-U200-62S-04	22.90	A01.04	UBX-18055867
LISA-U200 FOTA	LISA-U200-83S-00	23.41	A01.01	UBX-15020745
LISA-U201	LISA-U201-03A-00	23.41	A01.01	UBX-16010501
	LISA-U201-03A-01	23.41	A01.02	UBX-17010533
	LISA-U201-03A-02	23.41	A01.04	UBX-17046899
	LISA-U201-03S-00	23.41	A01.01	UBX-15020745
	LISA-U201-03S-01	23.41	A01.04	UBX-17048820
LISA-U201 FOTA	LISA-U201-83S-00	23.41	A01.02	UBX-16006079
	LISA-U201-83S-01	23.41	A01.04	UBX-17048820
LISA-U230	LISA-U230-01S-01	22.40	A01.00	UBX-TN-12040
	LISA-U230-01S-02	22.40	A01.02	UBX-17048820
	LISA-U230-01S-03	22.40	A01.03	UBX-18055867
LISA-U260	LISA-U260-01S-02	22.61	A01.02	UBX-14042086
	LISA-U260-01S-03	22.61	A01.05	UBX-17048820
	LISA-U260-02S-02	22.90	A01.02	UBX-14042086
	LISA-U260-02S-03	22.90	A01.04	UBX-17048820
LISA-U270	LISA-U270-01S-02	22.61	A01.02	UBX-TN-12061
	LISA-U270-02S-02	22.90	A01.02	UBX-13003492
	LISA-U270-02S-03	22.90	A01.04	UBX-17048820
	LISA-U270-62S-04	22.93	A01.02	UBX-13003492
	LISA-U270-62S-05	22.93	A01.04	UBX-15029938
	LISA-U270-62S-06	22.93	A01.05	UBX-16009934
	LISA-U270-62S-07	22.93	A01.07	UBX-17048820
	LISA-U270-63S-00	22.93	A01.06	UBX-16010383
	LISA-U270-63S-01	22.93	A01.07	UBX-17048820
	LISA-U270-63S-02	22.93	A01.08	UBX-18055867
	LISA-U270-68S-00	22.93	A01.03	UBX-15019240
	LISA-U270-68S-01	22.93	A01.07	UBX-17048820
MPCI-L200	MPCI-L200-00S-00	09.71	A01.15	UBX-14044437
	MPCI-L200-00S-01	09.71	A01.30	UBX-16026448
	MPCI-L200-02S-00	15.90	A01.00	UBX-15029946
	MPCI-L200-02S-01	15.90	A01.10	UBX-16031212
	MPCI-L280-03S-00	15.90	A01.50	UBX-17022983
MPCI-L201	MPCI-L201-01S-00	09.93	A01.07	UBX-15031360
	MPCI-L201-02S-00	For AT&T: 09.93 For VZW: 09.94	For AT&T: A02.50 For VZW: A01.02	UBX-17013932 UBX-17013932
	MPCI-L201-02S-01	For AT&T: 20.02 For VZW: 20.02	For AT&T: A01.00 For VZW: A01.00	UBX-19004176 UBX-19004176
MPCI-L210	MPCI-L210-00S-00	09.71	A01.15	UBX-14044437
	MPCI-L210-02S-00	15.63	A01.03	UBX-15029946
	MPCI-L210-02S-01	15.63	A01.10	UBX-16031212
	MPCI-L210-03S-00	15.63	A01.50	UBX-17022983
	MPCI-L210-60S-00	09.94	A01.00	UBX-15021694
	MPCI-L210-60S-01	09.94	A01.01	UBX-16005471
MPCI-L220	MPCI-L220-02S-00	15.93	A01.00	UBX-16025501
	MPCI-L220-62S-00	16.04	A01.00	UBX-17013073

Name	Type number	Modem version	Application version	PCN reference
MPCI-L280	MPCI-L280-02S-00	15.63	A01.03	UBX-15029946
	MPCI-L280-02S-01	15.63	A01.10	UBX-16031212
	MPCI-L280-03S-00	15.63	A01.50	UBX-17022983
SARA-G300	SARA-G300-00S-00	08.58	-	GSM.G2-TN-13007
	SARA-G300-00S-01	08.58	A01.01	UBX-16010060
SARA-G310	SARA-G310-00S-00	08.58	-	GSM.G2-TN-13007
	SARA-G310-00S-01	08.58	A01.01	UBX-16010060
SARA-G340	SARA-G340-00S-00	08.49	-	UBX-14000382
	SARA-G340-01S-00	08.70	-	UBX-14039634
	SARA-G340-02S-00	08.90	A00.02	UBX-16001074
	SARA-G340-02S-01	08.90	A01.13	UBX-18008871
SARA-G340 ATEX	SARA-G340-02X-00	08.90	A00.02	UBX-16017766
	SARA-G340-02X-01	08.90	A01.13	UBX-18008871
SARA-G350	SARA-G350-00S-00	08.49	-	GSM.G2-TN-13002
	SARA-G350-01S-00	08.70	-	UBX-14039634
	SARA-G350-02A-01	08.90	A00.06	UBX-17002293
	SARA-G350-02S-00	08.90	A00.02	UBX-16001074
	SARA-G350-02S-01	08.90	A01.13	UBX-18008871
	SARA-G350-01B-00	TBD	-	TBD
SARA-G350 ATEX	SARA-G350-00X-00	08.49	-	GSM.G2-TN-13002
	SARA-G350-02X-00	08.90	A00.02	UBX-16001074
	SARA-G350-02X-01	08.90	A01.13	UBX-18008871
SARA-G450	SARA-G450-00C-00	09.02	A02.01	UBX-18067098
SARA-U201	SARA-U201-03A-00	23.60	A01.02	UBX-17012748
	SARA-U201-03B-00	23.60	A01.01	UBX-16018086
	SARA-U201-63B-00	23.62	A01.01	UBX-17053345
	SARA-U201-63B-01	23.63	A01.02	UBX-18005738
	SARA-U201-63B-02	23.63	A01.03	UBX-18071209
	SARA-U201-04A-00	23.60	A01.06	UBX-17058162
	SARA-U201-04B-00	23.60	A01.06	UBX-17058162
SARA-U201 ATEX	SARA-U201-03X-00	23.60	A01.01	UBX-16030157
	SARA-U201-04X-00	23.60	A01.06	UBX-17058162
SARA-U260	SARA-U260-00S-01	23.20	A01.01	UBX-15013844
	SARA-U260-00S-02	23.20	A01.02	UBX-17061316
	SARA-U260-03S-00	23.41	A01.01	UBX-15020745
	SARA-U260-03S-01	23.41	A01.02	UBX-17061316
SARA-U270	SARA-U270-00S-00	23.20	A01.00	UBX-14015739
	SARA-U270-00S-01	23.20	A01.01	UBX-16006754
	SARA-U270-00S-02	23.20	A01.02	UBX-17061316
	SARA-U270-03A-00	23.41	A01.01	UBX-17004455
	SARA-U270-03A-01	23.41	A01.02	UBX-17064001
	SARA-U270-03S-00	23.41	A01.01	UBX-15020745
	SARA-U270-03S-01	23.41	A01.02	UBX-17061316
	SARA-U270-04B-00	23.41	A01.03	TBD
	SARA-U270-53S-00	23.41	A01.03	UBX-16008757
	SARA-U270-53S-01	23.41	A01.04	UBX-17011151
	SARA-U270-53S-02	23.41	A01.05	UBX-17061316

Name	Type number	Modem version	Application version	PCN reference
	SARA-U270-73S-00	23.41	A01.02	UBX-16028821
	SARA-U270-73S-01	23.41	A01.03	UBX-17061316
SARA-U270 ATEX	SARA-U270-00X-00	23.20	A01.00	UBX-14015739
	SARA-U270-00X-01	23.20	A01.02	UBX-17061316
SARA-U280	SARA-U280-00S-00	23.28	A01.00	UBX-15013708
	SARA-U280-00S-01	23.28	A01.01	UBX-17061316
	SARA-U280-03S-00	23.41	A01.01	UBX-15020745
	SARA-U280-03S-01	23.41	A01.02	UBX-17061316
TOBY-L200	TOBY-L200-00S-00	09.71	A01.15	UBX-14044437
	TOBY-L200-00S-01	09.71	A01.30	UBX-16026448
	TOBY-L200-02S-00	15.90	A01.00	UBX-15029946
	TOBY-L200-02S-01	15.90	A01.10	UBX-16031212
	TOBY-L200-03S-00	15.90	A01.50	UBX-17022983
	TOBY-L200-03S-01	16.18	A01.00	UBX-19004176
	TOBY-L200-03A-01	16.18	A01.00	UBX-19004188
TOBY-L201	TOBY-L201-01S-00	09.93	A01.07	UBX-15021135
	TOBY-L201-02S-00 TOBY-L201-02S-01	For AT&T: 09.93 For VZW: 09.94	For AT&T: A02.50 For VZW: A01.02	UBX-17013932 UBX-17013932
		For AT&T: 20.02 For VZW: 20.02	For AT&T: A01.00 For VZW: A01.00	UBX-19004176 UBX-19004176
TOBY-L210	TOBY-L210-00S-00	09.71	A01.15	UBX-14044437
	TOBY-L210-02S-00	15.63	A01.03	UBX-15029946
	TOBY-L210-02S-01	15.63	A01.10	UBX-16031212
	TOBY-L210-03S-00	15.63	A01.50	UBX-17022983
	TOBY-L210-03S-01	16.18	A01.00	UBX-19004176
	TOBY-L210-03A-00	15.63	A01.60	UBX-18010749
	TOBY-L210-03A-01	16.18	A01.00	UBX-19004188
	TOBY-L210-60S-00	09.94	A01.00	UBX-15021694
	TOBY-L210-60S-01	09.94	A01.01	UBX-16005471
	TOBY-L210-62S-00	16.05	A01.02	UBX-17003573
TOBY-L220	TOBY-L220-02S-00	15.93	A01.00	UBX-16025501
	TOBY-L220-62S-00	16.04	A01.00	UBX-17013073
TOBY-L280	TOBY-L280-02S-00	15.63	A01.03	UBX-15029946
	TOBY-L280-02S-01	15.63	A01.10	UBX-16031212
	TOBY-L280-03S-00	15.63	A01.50	UBX-17022983
	TOBY-L280-03S-01	16.18	A01.00	UBX-19004176
	TOBY-L280-03A-01	16.18	A01.00	UBX-19004188
TOBY-L4006	TOBY-L4006-01A-00	40.35	A10.01	UBX-18047576
	TOBY-L4006-51A-00	40.35	A00.01	UBX-18047576
TOBY-L4106	TOBY-L4106-01A-00	40.35	A10.01	UBX-18047576
	TOBY-L4106-51A-00	40.35	A00.01	UBX-18047576
TOBY-L4206	TOBY-L4206-01A-00	TBD	TBD	TBD
	TOBY-L4206-51A-00	TBD	TBD	TBD
TOBY-L4906	TOBY-L4906-01A-00	40.35	A10.01	UBX-18047576
	TOBY-L4906-50A-00	40.25	A00.09	UBX-18053603
	TOBY-L4906-50A-01	40.25	A00.12	UBX-18069505
	TOBY-L4906-51A-00	40.35	A00.01	UBX-18047576

Name	Type number	Modem version	Application version	PCN reference
TOBY-R200	TOBY-R200-02B-00	30.31	A01.01	UBX-17006265
	TOBY-R200-02B-01	30.31	A02.00	UBX-17048314
	TOBY-R200-02B-02	30.31	A02.01	UBX-18018067
TOBY-R202	TOBY-R202-02B-00	30.31	A01.01	UBX-17006265
	TOBY-R202-02B-01	30.31	A02.00	UBX-17048314
	TOBY-R202-02B-02	30.31	A02.01	UBX-18018067

How to use this Manual

The u-blox Cellular Modules AT Commands Manual provides the necessary information to successfully design in and configure the applicable u-blox cellular modules.

This manual has a modular structure. It is not necessary to read it from the beginning to the end.

The following symbols are used to highlight important information within the manual:

☞ An index finger points out key information pertaining to module integration and performance.

⚠ A warning symbol indicates actions that could negatively impact or damage the module.

Summary table

The summary table on the top of each command section is a quick reference for the user.

command_name						
Modules	TOBY-L2 MPCI-L2					
	LISA-U110 LISA-U120 LISA-U130 LISA-U2					
	LEON-G1 SARA-G3					
Attributes	**Syntax**	**PIN required**	**Settings saved**	**Can be aborted**	**Response time**	**Error reference**
	full	No	No	No	-	-

It is composed of two sections:

- **Modules**: lists all the modules that support the command. The modules are grouped in rows by cellular standard (i.e. L for LTE high data rate (Cat 3 and above), R for LTE low data rate (Cat 1 and below), U for UMTS/HSPA, G for GSM/GPRS, N for NB-IoT (LTE Cat NB1 / LTE Cat NB2)). In each row the modules are grouped by: form factor (i.e. SARA, LISA), platform technology (e.g. SARA-G), platform generation (e.g. SARA-G3), product name (e.g. SARA-G350) and ordering code (e.g. SARA-G350-00S). In example: if 'LISA-U2' is reported, the command applies to all the modules having LISA form factor, second chipset version provided with any release of firmware.
- **Attributes**
  - **Syntax**
    - **full**: the command syntax is fully compatible among all the products listed in the "Modules" section
    - **partial**: the products support different syntaxes (usually backward compatible with respect to previous cellular standards)
  - **PIN required**
    - **Yes**: it is necessary to insert the PIN before the set and/or read command execution
    - **No**: the PIN insertion is not needed to execute the command
  - **Settings saved**
    - **Profile**: the command setting can be saved in a personal profile as specified in Chapter 1.2
    - **NVM**: the command setting is saved in the non-volatile memory as specified in Chapter 1.2
    - **No**: the current command setting is volatile and cannot be saved
  - **Can be aborted**
    - **Yes**: the command execution can be aborted if a character is sent to the DCE during the command execution
    - **No**: the command cannot be aborted during the command execution
  - **Response time**: estimated maximum time to get the final result code for the AT command execution.

More precisely, the command response time measures the time from the complete acquisition of the command line to the issuing of the command result code. This kind of response time is generally lower than the time measured by the application on the DTE, because the issuing of the command on the DTE is influenced by the AT interface characteristics (e.g. the synchronous/asynchronous transfer type, the selected baudrate, etc.), by power saving and flow control, which introduce a variable latency in the command acquisition by the DCE.

For example, the maximum expected response time shall be extended if the communication with the module is carried out on a MUX virtual port, because in this case the command line and the result code are transferred via a specific protocol running on the physical port, that might introduce additional communication delay due to framing and retransmissions.

Similarly, the maximum expected response time of AT commands accessing the SIM shall be extended if the module is using a remote SIM card via SAP instead of the local SIM card.

If the response time for a command is left blank (actually "-"), it is an "immediate" response. It means that the command is executed without asynchronous requests to the protocol stack or the internal applications, which usually require time to be answered: the command execution is synchronous (implying that no long blocking processing is done) and lasts a negligible time (the command response is issued by the module in typically less than 10 ms, and in any case less than 1 s).

The response time shall be extended if the issued AT command triggers a service that cannot be served immediately due to concurrent access to the same service or resource via AT commands issued on a different communication port or from internal applications; typical examples are registration commands and SIM access, that can be also autonomously triggered by the module (e.g. auto-COPS) and can therefore postpone the execution of the AT commands issued by the user.

- **Error reference**: reference to the error result codes listed in the Appendix A

The attributes listed in the summary table apply by default to all u-blox modules supporting the specific AT command. If a u-blox module or module series does not comply to the default behavior, the exception is highlighted in Chapter 1.2 for the saving of settings, in Chapter 1.1.6 for the abortability, and in a product specific note in the AT command description for the PIN check.

u-blox Technical Documentation

As part of our commitment to customer support, u-blox maintains an extensive volume of technical documentation for our products. In addition to our product-specific technical data sheets, the following manuals are available to assist u-blox customers in product design and development.

AT Commands Manual: This document provides the description of the AT commands supported by u-blox cellular modules.

System Integration Manual: This document describes u-blox cellular modules from the hardware and the software point of view. It provides hardware design guidelines for the optimal integration of the cellular module in the application device and it provides information on how to set up production and final product tests on application devices integrating the cellular module.

Application Notes: These documents provide guidelines and information on specific u-blox cellular module hardware or software topics. See Related documents for application notes related to your cellular module.

Questions

If you have any questions about u-blox Cellular Hardware Integration, please:

- Read this manual carefully
- Contact our information service on our homepage www.u-blox.com
- Read the questions and answers on our FAQ database

Technical Support

Worldwide Web

Our website (www.u-blox.com) is a rich pool of information. Product information, technical documents and helpful FAQ can be accessed 24h a day.

By E-mail
If you have technical problems or cannot find the required information in the provided documents, contact the nearest of the Technical Support offices by email. Use our service pool email addresses rather than any personal email address of our staff. This makes sure that your request is processed as soon as possible. You will find the contact details at the end of the document.

Helpful Information when Contacting Technical Support
When contacting Technical Support please have the following information ready:

- Module type (e.g. SARA-G350-00S-00) and firmware version (e.g. 08.49)
- Module configuration
- Clear description of your question or the problem
- A short description of the application
- Your complete contact details

Contents

1 AT command settings ... 22
1.1 Definitions ... 22
1.2 Storing of AT commands setting ... 27
1.3 S-parameters ... 27

2 General operation ... 28
2.1 Start up and initialization ... 28
2.2 AT commands types ... 29

3 IPC - Inter Processor Communication ... 31
3.1 Multiplexing mode +CMUX ... 31

4 General ... 34
4.1 Manufacturer identification +CGMI ... 34
4.2 Manufacturer identification +GMI ... 34
4.3 Model identification +CGMM ... 34
4.4 Model identification +GMM ... 35
4.5 Firmware version identification +CGMR ... 35
4.6 Firmware version identification +GMR ... 36
4.7 IMEI identification +CGSN ... 36
4.8 IMEI identification +GSN ... 37
4.9 Identification information I ... 37
4.10 TE character set configuration +CSCS ... 38
4.11 International mobile subscriber identification +CIMI ... 38
4.12 Card identification +CCID ... 39
4.13 Request complete capabilities list +GCAP ... 39
4.14 Repeat last command A/ ... 40
4.15 List all available AT commands +CLAC ... 40
4.16 Help displaying all commands &H ... 41

5 Mobile equipment control and status ... 43
5.1 Phone activity status +CPAS ... 43
5.2 Module switch off +CPWROFF ... 43
5.3 Set module functionality +CFUN ... 44
5.4 Indicator control +CIND ... 46
5.5 Configuration of indicator control +UCIND ... 48
5.6 Mobile termination event reporting +CMER ... 49
5.7 Clock +CCLK ... 51
5.8 Alarm +CALA ... 52
5.9 Delete alarm +CALD ... 53
5.10 Alert sound mode +CALM ... 54
5.11 Ringer sound level +CRSL ... 55
5.12 Loudspeaker volume level +CLVL ... 56
5.13 Mute control +CMUT ... 57
5.14 Set greeting text +CSGT ... 57
5.15 Automatic time zone update +CTZU ... 58
5.16 Time zone reporting +CTZR ... 59
5.17 List current calls +CLCC ... 60
5.18 IMS single radio voice call continuity +CISRVCC ... 61
5.19 Report mobile termination error +CMEE ... 62
5.20 Extended error report +CEER ... 63
5.21 Proprietary extended error report +UCEER ... 64

6 Call control ... 66
6.1 Select type of address +CSTA ... 66

6.2 Dial command D.... 66
6.3 Direct calling from phonebooks D>.... 69
6.4 Select tone dialling T.... 69
6.5 Select pulse dialling P.... 70
6.6 Call answer A.... 70
6.7 Hook control H.... 71
6.8 Monitor speaker loudness L.... 71
6.9 Monitor speaker mode M.... 72
6.10 Call mode +CMOD.... 72
6.11 Hang up call +CHUP.... 73
6.12 Single numbering scheme +CSNS.... 73
6.13 Set reporting call status +UCALLSTAT.... 74
6.14 Information to in-band-tones availability +UPROGRESS.... 75
6.15 Tone duration +VTD.... 76
6.16 DTMF and tone generation +VTS.... 77
6.17 Start and stop tone generation +UVTS.... 78
6.18 Redial last telephone number DL.... 79
6.19 Automatic answer S0.... 79
6.20 Set voice mail number +CSVM.... 80
6.21 Emergency call reporting configuration +UEMC.... 81
6.22 Emergency number verification +UEMN.... 81

7 Network service.... 83

7.1 Subscriber number +CNUM.... 83
7.2 Signal quality +CSQ.... 83
7.3 Extended signal quality +CESQ.... 86
7.4 Operator selection +COPS.... 87
7.5 MCC update table +UNVMMCC.... 94
7.6 PLMN information list +UNVMPLMN.... 96
7.7 Radio Access Technology (RAT) selection +URAT.... 99
7.8 Display EONS names +UEONS.... 102
7.9 Display operator name +UDOPN.... 102
7.10 Preferred PLMN list selection +CPLS.... 104
7.11 PS operator selection +UCGOPS.... 104
7.12 Network registration status +CREG.... 106
7.13 HSDPA/HSUPA mode configuration +UHSDUPA.... 109
7.14 Preferred operator list +CPOL.... 110
7.15 Read operator names +COPN.... 112
7.16 Network emergency bearer services support +CNEM.... 112
7.17 Steering of Roaming configuration +UDCONF=20.... 113
7.18 Fast Dormancy activation +UFDAC.... 114
7.19 Fast Dormancy configuration +UDCONF=61.... 115
7.20 Network selection control +PACSP.... 116
7.21 Integrity check on test networks configuration +UDCONF=81.... 117
7.22 Select band +UBANDSEL.... 118
7.23 Select band +UACT.... 119
7.24 Cell environment description +CGED.... 122
7.25 Neighbour cells configuration +UDCONF=83.... 133
7.26 Channel and network environment description +UCGED.... 134
7.27 Provide cell information +UCELLINFO.... 139
7.28 Lock on a specific cell +UCELLLOCK.... 141
7.29 Wireless service selection +WS46.... 146
7.30 Service specific access control restriction status +CSSAC.... 147
7.31 Home zone reporting +UHOMEZR.... 149
7.32 Jamming detection +UCD.... 149
7.33 Smart jamming detection +UJAD.... 152
7.34 IMSI detach +UCSDETACH.... 154
7.35 MNO configuration +UMNOCONF.... 154
7.36 PLMN list extensions +UMNOPLMN.... 158
7.37 LTE category configuration +ULTECAT.... 159
7.38 Edit Verizon wireless APN table +VZWAPNE.... 160

7.39 Read RSRP values +VZWRSRP....161
7.40 Read RSRQ values +VZWRSRQ....162
7.41 Closed Subscriber Group +UCSG....162
7.42 Network Friendly Mode (NFM) activation +UNFM....164
7.43 Network Friendly Mode (NFM) configuration +UNFMCONF....165
7.44 Radio Policy Manager (RPM) activation +URPM....167
7.45 Radio Policy Manager (RPM) configuration +URPMCONF....168
7.46 Device Aggresion Management configuration +UDAMCFG....169
7.47 PLMN search configuration in Out Of Coverage +UDCONF=55....169
7.48 Purging of temporary mobile identities after SIM refresh +UDCONF=56....170
7.49 Smart radio coverage manager configuration +UDCONF=57....171

8 IP Multimedia Subsystem (IMS)....173

8.1 Introduction....173
8.2 Domain configuration for supplementary services +UISS....173
8.3 IMS client configuration +UIMSCFG....173
8.4 IMS client registration / deregistration in network +UIMSREG....177
8.5 IMS configuration setting +UIMSCONF....178
8.6 Read IMS configuration +UIMSRCONF....182
8.7 IMS registration information +CIREG....183
8.8 IMS network reporting +CIREP....184
8.9 Availability for SMS using IMS +CASIMS....185
8.10 Availability for voice calls with IMS +CAVIMS....185
8.11 UE's Mobility Management IMS Voice Termination +CMMIVT....186
8.12 UE's voice domain preference UTRAN +CVDP....186
8.13 UE's voice domain preference E-UTRAN +CEVDP....187
8.14 Domain configuration for MO SMS messages +UISMS....188
8.15 MO SMS mode configuration +UICMGSMODE....188
8.16 Send 3GPP2 SMS message +UCMGS3GPP2....189
8.17 Enable/disable the 3GPP2 SMS URC +UCMT3GPP2....189

9 Security....192

9.1 Enter PIN +CPIN....192
9.2 Read remaining SIM PIN attempts +UPINCNT....193
9.3 Facility lock +CLCK....194
9.4 Change password +CPWD....196
9.5 Custom SIM lock +USIMLCK....196

10 Phonebook....199

10.1 Select phonebook memory storage +CPBS....199
10.2 Read phonebook entries +CPBR....200
10.3 Find phonebook entries +CPBF....201
10.4 Write phonebook entry +CPBW....203
10.5 Read/rename phonebook group +UPBGR....205

11 Short Messages Service....206

11.1 Introduction....206
11.2 Select message service +CSMS....207
11.3 Preferred message storage +CPMS....208
11.4 Preferred message format +CMGF....210
11.5 Save settings +CSAS....210
11.6 Restore settings +CRES....211
11.7 Show text mode parameters +CSDH....211
11.8 New message indication +CNMI....212
11.9 Incoming SMS/CBM indication via different AT interfaces +UDCONF=82....216
11.10 Select service for MO SMS messages +CGSMS....216
11.11 Read message +CMGR....217
11.12 New message acknowledgement to MT +CNMA....220
11.13 List message +CMGL....221
11.14 Send message (+CMGS/+CMSS) set commands conclusion configuration +UDCONF=13....223
11.15 Send message +CMGS....224

11.16 Write message to memory +CMGW....225
11.17 Send message from storage +CMSS....226
11.18 Set text mode parameters +CSMP....227
11.19 Delete message +CMGD....228
11.20 Primary notification event reporting +CPNER....228
11.21 Service center address +CSCA....229
11.22 Select cell broadcast message types +CSCB....230
11.23 Read concatenated message +UCMGR....231
11.24 List concatenated message +UCMGL....233
11.25 Send concatenated message +UCMGS....236
11.26 Write concatenated message to memory +UCMGW....237
11.27 More messages to send +CMMS....238
11.28 Peek message +UCMGP....239
11.29 Message waiting indication +UMWI....240
11.30 Earthquake and Tsunami Warning System configuration +UETWCFG....241
11.31 Start ETWS notifications +UETWNTFYSTART....242
11.32 Stop ETWS notifications +UETWNTFYSTOP....244

12 Supplementary services....245

12.1 Introduction....245
12.2 Call forwarding +CCFC....245
12.3 Call waiting +CCWA....247
12.4 Calling line identification restriction +CLIR....249
12.5 Calling line identification presentation +CLIP....250
12.6 Connected line identification presentation +COLP....251
12.7 Connected line identification restriction +COLR....252
12.8 Advice of charge +CAOC....252
12.9 Accumulated call meter +CACM....253
12.10 Call meter maximum event +CCWE....254
12.11 Accumulated call meter maximum +CAMM....254
12.12 Price per unit and currency table +CPUC....255
12.13 Call related supplementary services +CHLD....256
12.14 Call deflection +CTFR....257
12.15 Supplementary service notifications +CSSN....257
12.16 User to user signalling service 1 +CUUS1....259
12.17 Unstructured supplementary service data +CUSD....260
12.18 Closed user group +CCUG....261
12.19 Calling name presentation +CNAP....262
12.20 eMLPP priority registration and interrogation +CAEMLPP....263
12.21 eMLPP subscriptions +CPPS....264
12.22 Automatic answer for eMLPP service +CAAP....264

13 Circuit switched data services....266

13.1 Introduction....266
13.2 Select bearer service type +CBST....266
13.3 Connection type groups configuration +UDCONF=32....268
13.4 Circuit switched data (CSD) configuration +UCSD....269
13.5 Circuit switched data (CSD) action +UCSDA....270
13.6 Circuit switched network-assigned data +UCSND....271
13.7 Service class selection and identification +FCLASS....272
13.8 Service reporting control +CR....273
13.9 Cellular result codes +CRC....273
13.10 Radio link protocol +CRLP....275

14 FAX class 2....276

14.1 Introduction....276
14.2 Adaptive answer +FAA....276
14.3 Address & polling capabilities +FAP....276
14.4 Buffer size +FBS....277
14.5 Data bit order +FBO....277
14.6 HDLC frame reporting +FBU....278

14.7 DS capabilities parameters +FCC....278
14.8 Copy quality checking +FCQ....279
14.9 Capability to receive data +FCR....280
14.10 Current session results +FCS....280
14.11 DTE phase C response timeout +FCT....281
14.12 Receive data +FDR....281
14.13 Transmit Data +FDT....281
14.14 Phase C received EOL alignment +FEA....282
14.15 Format conversion +FFC....282
14.16 Report file transfer diagnostic frame +FFD....283
14.17 Call termination status +FHS....283
14.18 Procedure interrupt enable +FIE....284
14.19 Initialize facsimile parameters +FIP....284
14.20 Current session parameters +FIS....285
14.21 Inactivity timeout +FIT....286
14.22 Session termination +FKS, +FK....286
14.23 Local ID string +FLI....286
14.24 Set flow control +FLO....287
14.25 Indicate document to poll +FLP....287
14.26 Request manufacturer identification +FMI....288
14.27 Request model identification +FMM....288
14.28 Request revision identification +FMR....289
14.29 Minimum phase C speed +FMS....289
14.30 Negotiation reporting +FNR....290
14.31 Non-standard frame FIF octet string +FNS....290
14.32 NSF message data indication +FND....291
14.33 Selective polling address +FPA....291
14.34 Local polling ID string +FPI....292
14.35 Packet protocol control +FPP....292
14.36 Page status +FPS....293
14.37 Password parameter +FPW....293
14.38 Receive quality thresholds +FRQ....294
14.39 Error correction mode retry count +FRY....294
14.40 SubAddress parameter +FSA....295
14.41 Request to poll +FSP....295
14.42 Fax intermediate result codes....295

15 V24 control and V25ter....297

15.1 Introduction....297
15.2 Circuit 109 behavior &C....297
15.3 Circuit 108/2 behavior &D....298
15.4 DSR override &S....299
15.5 Flow control &K....300
15.6 DTE-DCE character framing +ICF....302
15.7 DTE-DCE local flow control +IFC....304
15.8 Set flow control \Q....306
15.9 UART data rate configuration +IPR....307
15.10 Return to on-line data state O....311
15.11 Escape character S2....312
15.12 Command line termination character S3....313
15.13 Response formatting character S4....313
15.14 Command line editing character S5....314
15.15 Pause before blind dialling S6....315
15.16 Connection completion timeout S7....315
15.17 Command dial modifier time S8....316
15.18 Automatic disconnect delay S10....317
15.19 Escape prompt delay (EPD) S12....317
15.20 Command echo E....318
15.21 Result code suppression Q....318
15.22 DCE response format V....319
15.23 Result code selection and call progress monitoring control X....319

15.24 Reset to default configuration Z....320
15.25 Set to factory defined configuration &F....320
15.26 Store current configuration &W....321
15.27 Display current configuration &V....322
15.28 Designate a default reset profile &Y....323
15.29 Parity bit transmission over the air +UTPB....323

16 SIM management....327

16.1 Generic SIM access +CSIM....327
16.2 Restricted SIM access +CRSM....327
16.3 Read the SIM language +CLAN....329
16.4 Check for UICC card +UUICC....329
16.5 Customer service profile +UCSP....330
16.6 SIM hot insertion configuration +UDCONF=50....330
16.7 UICC application discovery +CUAD....332
16.8 Open logical channel +CCHO....333
16.9 Close logical channel +CCHC....333
16.10 Generic UICC logical channel access +CGLA....334
16.11 Restricted UICC logical channel access +CRLA....335
16.12 SIM states reporting +USIMSTAT....336
16.13 Answer To Reset contents +USIMATR....337
16.14 Perform SIM switch +XSIMSWITCH....338

17 SIM toolkit....339

17.1 Introduction....339
17.2 Terminal profile +STKPROF....339
17.3 Proactive command in dedicated mode +STKPRO....340
17.4 Terminal response in dedicated mode +STKTR....343
17.5 Proactive session status in dedicated mode +STKCNF....346
17.6 Bearer Independent Protocol status indication +UBIP....347
17.7 Default BIP APN configuration +UBIPAPN....348
17.8 Envelope in dedicated mode +STKENV....348
17.9 Call and short message control in dedicated mode +STKCC....349
17.10 Proactive command indication in raw mode +SATI....350
17.11 Proactive command notification in raw mode +SATN....350
17.12 Send terminal response in raw mode +SATR....351
17.13 Terminal response confirmation in raw mode +SATF....351
17.14 User confirmation for setup call in raw mode +SATD....352
17.15 Envelope download in raw mode +SATE....352
17.16 Call and Short Message Control in Raw Mode +STKCTRLIND....353
17.17 Terminal profile +UCATPROF....354
17.18 Proactive command indication in dedicated mode +UCATPROI....354
17.19 Proactive command notification in dedicated mode +UCATPRON....356
17.20 Terminal response in dedicated mode +UCATTR....356
17.21 Proactive Session Status in Dedicated Mode +UCATCNF....358
17.22 Envelope in Dedicated Mode +UCATENV....358
17.23 Call and Short Message Control in Dedicated Mode +UCATCC....358
17.24 Proactive Command Indication in Raw Mode +URCATI....359
17.25 Proactive Command Notification in Raw Mode +URCATN....359
17.26 Terminal response in Raw Mode +URCATR....360
17.27 Proactive Session Status in Raw Mode +URCATF....360
17.28 Envelope in Raw Mode +URCATE....360
17.29 Call and Short Message Control in Raw Mode +URCATCC....361
17.30 User setting for proactive DTMF tone generation +UDTMF....362
17.31 Refresh delay events management +UDCONF=54....362

18 Packet switched data services....364

18.1 PDP contexts and parameter definition....364
18.2 PPP LCP handshake behaviour....367
18.3 Printing IP address format +CGPIAF....368
18.4 PDP context definition +CGDCONT....369

18.5 Protocol configuration options configuration +UPCO ... 373
18.6 IPv6 configuration +UDCONF=66 ... 376
18.7 Packet switched data configuration +UPSD ... 377
18.8 Packet switched data action +UPSDA ... 383
18.9 Packet switched network-assigned data +UPSND ... 385
18.10 Read PDP context DNS information +UDCONF=11 ... 386
18.11 Dynamic DNS request +UDNS ... 387
18.12 Quality of service profile (requested) +CGQREQ ... 388
18.13 Quality of service profile (minimum acceptable) +CGQMIN ... 389
18.14 GPRS attach or detach +CGATT ... 390
18.15 Configure the auto attach to PS domain on power on +UCGATT ... 391
18.16 PDP context activate or deactivate +CGACT ... 392
18.17 Control ESM cause 52 handling +UDCONF=12 ... 395
18.18 Manual response to a network request for PDP context activation +CGANS ... 396
18.19 Automatic response to a network request for PDP context activation +CGAUTO ... 397
18.20 Enter data state +CGDATA ... 398
18.21 Enter PPP state/GPRS dial-up D* ... 400
18.22 Show PDP address +CGPADDR ... 402
18.23 GPRS MS class configuration +CGCLASS ... 402
18.24 GPRS MS class configuration at start up +UCGCLASS ... 403
18.25 Device class setting +UCLASS ... 404
18.26 GPRS event reporting +CGEREP ... 406
18.27 GPRS network registration status +CGREG ... 410
18.28 Extended Packet Switched network registration status +UREG ... 412
18.29 Manual deactivation of a PDP context H ... 413
18.30 PDP context modify +CGCMOD ... 413
18.31 3G Quality of service profile (requested) +CGEQREQ ... 414
18.32 3G Quality of service profile (minimum acceptable) +CGEQMIN ... 418
18.33 3G Quality of Service Profile (negotiated) +CGEQNEG ... 422
18.34 Define secondary PDP context +CGDSCONT ... 424
18.35 UE modes of operation for EPS +CEMODE ... 426
18.36 EPS network registration status +CEREG ... 427
18.37 Delete non-active PDP contexts +CGDEL ... 429
18.38 Traffic flow template read dynamic parameters +CGTFTRDP ... 430
18.39 Configure the authentication parameters of a PDP/EPS bearer +UAUTHREQ ... 432
18.40 Send custom packets over a context +UTGSINK ... 433
18.41 Define EPS quality of service +CGEQOS ... 434
18.42 EPS quality of service read dynamic parameters +CGEQOSRDP ... 435
18.43 Secondary PDP context read dynamic parameters +CGSCONTRDP ... 436
18.44 UE's usage setting for EPS +CEUS ... 437
18.45 PDP Context Read Dynamic Parameters +CGCONTRDP ... 437
18.46 Configure the initial EPS bearer / PDP context +UCGDFLT ... 439
18.47 Always-On mode parameters settings +CGPERMSET ... 441
18.48 Always-On mode settings +CGPERMACT ... 442
18.49 Always-On mode check state +CGPERMSTATE ... 443
18.50 Traffic Flow Template +CGTFT ... 443
18.51 Read counters of sent or received PSD data +UGCNTRD ... 446
18.52 Set/reset counter of sent or received PSD data +UGCNTSET ... 447
18.53 Uplink user data plane configuration +UDCONF=9 ... 448
18.54 Feature Group Indicators (FGI) settings +UFGI ... 449

19 System features ... 450

19.1 Firmware installation +UFWINSTALL ... 450
19.2 Firmware update Over AT (FOAT) +UFWUPD ... 453
19.3 Firmware installation with signature verification +UFWSINSTALL ... 456
19.4 Antenna detection +UANTR ... 458
19.5 RX antenna selection +UANT ... 459
19.6 Rx diversity +URXDIV ... 460
19.7 ADC read command +UADC ... 461
19.8 Power saving control (Power SaVing) +UPSV ... 461
19.9 End user test +UTEST ... 466

19.10 Smart temperature supervisor +USTS....475
19.11 MSPR profile handling configuration +UDCONF=40....477
19.12 Data channel configuration +UDATACHANNEL....478
19.13 RING line handling +URING....479
19.14 CTS line state in case of disabled HW flow control +UCTS....480
19.15 PPP/LCP silent mode configuration +UDCONF=0....481
19.16 F-DPCH/enhanced F-DPCH configuration +UDCONF=60....481
19.17 USB profiles configuration +UUSBCONF....482
19.18 Serial interfaces configuration selection +USIO....484
19.19 Establish ECM data connection +UCEDATA....487
19.20 Start, stop and configure the OMA-DM client +UOMADM....488
19.21 OMA-DM alert +UOMADMALERT....489
19.22 OMA-DM repository access +UOMADMREP....490
19.23 Enable/disable OMA-DM unsolicited status messages +UOMASTAT....492
19.24 Internal temperature monitor +UTEMP....492
19.25 Restore factory configuration +UFACTORY....494
19.26 KT remote reset KTCFUN....495
19.27 KT reading quality information KTDEVSTAT....496
19.28 KT configuration command KTUBXCONF....497
19.29 Reject international calls KTUCALLREJ....498
19.30 Request KT OTA opening *KTF*OPENING....499
19.31 Display the current UMTS environment KTUUMTSENV....499
19.32 Last gasp configuration +ULGASP....500

20 GPIO....503
20.1 Introduction....503
20.2 GPIO select configuration command +UGPIOC....512
20.3 GPIO read command +UGPIOR....514
20.4 GPIO set command +UGPIOW....515

21 File System....517
21.1 File tags....517
21.2 Download file +UDWNFILE....518
21.3 List files information +ULSTFILE....520
21.4 Read file +URDFILE....521
21.5 Partial download file +URDBLOCK....522
21.6 Delete file +UDELFILE....523
21.7 File system limits....524

22 Audio interface....526
22.1 Audio path mode setting +USPM....526
22.2 I^2S digital interface mode +UI2S....532
22.3 Play audio resource +UPAR....541
22.4 Stop audio resource +USAR....543
22.5 Play audio file +UPLAYFILE....544
22.6 Record audio file +URECFILE....547
22.7 Stop audio file +USTOPFILE....549
22.8 Play audio file +UAPLAY....549
22.9 Record audio file +UAREC....551
22.10 Tone generator +UTGN....554
22.11 Ringing tone selection +URNG....555
22.12 SMS alert sound mode (Message Sound Muting) +UMSM....556
22.13 Master clock control +UMCLK....557
22.14 External device configuration +UEXTDCONF....558
22.15 Speech codec information +USPEECHINFO....561
22.16 Speech codec configuration +UDCONF=30....562
22.17 Waiting call tone configuration +UDCONF=33....564
22.18 Hardware audio path test +UMAAT....564

23 Audio parameters tuning....566
23.1 Introduction....566

23.2 Microphone gain (Microphone Gain Control) +UMGC ... 577
23.3 Speaker Gain (Speaker Gain Control) +USGC ... 579
23.4 Sidetone configuration +USTN ... 581
23.5 Uplink Digital Filters (Uplink Biquad Filters) +UUBF ... 582
23.6 Downlink Digital Filters (Downlink Biquad Filters) +UDBF ... 585
23.7 Hands-Free Parameters (Hands-Free Parameters) +UHFP ... 588
23.8 Audio parameters tuning +UAPT ... 597
23.9 Audio parameters tuning +UTI ... 600
23.10 Volume gain control +UVGC ... 600
23.11 Microphone analog and digital gains +UMAFE ... 602
23.12 Speaker analog and digital gains +USAFE ... 603
23.13 Microphone select +UMSEL ... 603

24 DNS ... 605
24.1 Resolve name / IP number through DNS +UDNSRN ... 605
24.2 Dynamic DNS update +UDYNDNS ... 607

25 Internet protocol transport layer ... 610
25.1 Introduction ... 610
25.2 IPv4/IPv6 addressing ... 610
25.3 Create Socket +USOCR ... 612
25.4 SSL/TLS mode configuration on TCP socket +USOSEC ... 613
25.5 Set socket option +USOSO ... 614
25.6 Get Socket Option +USOGO ... 616
25.7 Close Socket +USOCL ... 617
25.8 Get Socket Error +USOER ... 618
25.9 Connect Socket +USOCO ... 619
25.10 Write socket data +USOWR ... 620
25.11 SendTo command (UDP only) +USOST ... 622
25.12 Read Socket Data +USORD ... 624
25.13 Receive From command (UDP only) +USORF ... 626
25.14 Set Listening Socket +USOLI ... 627
25.15 Firewall control +UFRW ... 628
25.16 HEX mode configuration +UDCONF=1 ... 629
25.17 Set socket in Direct Link mode +USODL ... 630
25.18 UDP Direct Link Packet Size configuration +UDCONF=2 ... 632
25.19 UDP Direct Link Sending timer configuration +UDCONF=3 ... 633
25.20 Timer Trigger configuration for Direct Link +UDCONF=5 ... 633
25.21 Data Length Trigger configuration for Direct Link +UDCONF=6 ... 634
25.22 Character trigger configuration for Direct Link +UDCONF=7 ... 635
25.23 Congestion timer configuration for Direct Link +UDCONF=8 ... 635
25.24 Direct Link disconnect DSR line handling +UDCONF=10 ... 636
25.25 Socket control +USOCTL ... 637
25.26 IP Change Notification +UIPCHGN ... 638
25.27 Socket Always On +USOAO ... 642

26 SSL/TLS ... 647
26.1 Introduction ... 647
26.2 SSL/TLS certificates and private keys manager +USECMNG ... 647
26.3 SSL/TLS security layer profile manager +USECPRF ... 651
26.4 Data encryption configuration +USECCFG ... 657
26.5 AT+USECMNG command example ... 658
26.6 Notes ... 659

27 FTP ... 660
27.1 FTP service configuration +UFTP ... 660
27.2 FTP command +UFTPC ... 663
27.3 FTP error +UFTPER ... 666

28 HTTP ... 668
28.1 HTTP control +UHTTP ... 668

28.2 HTTP advanced control+UHTTPAC....671
28.3 HTTP command +UHTTPC....673
28.4 HTTP protocol error +UHTTPER....676

29 SMTP....677
29.1 SMTP control +USMTP....677
29.2 SMTP mail control +USMTPM....679
29.3 SMTP command +USMTPC....681
29.4 SMTP error +USMTPER....681

30 Ping....683
30.1 Ping command +UPING....683
30.2 ICMP echo reply configuration +UDCONF=4....685

31 GNSS....686
31.1 NMEA....686
31.2 GNSS power management +UGPS....686
31.3 Assisted GNSS unsolicited indication +UGIND....688
31.4 GNSS profile configuration +UGPRF....690
31.5 AssistNow Online configuration +UGAOP....692
31.6 AssistNow Offline configuration +UGAOF....693
31.7 Aiding server configuration +UGSRV....694
31.8 GNSS aiding request command +UGAOS....696
31.9 Send of UBX string +UGUBX....697
31.10 GNSS indications timer +UGTMR....698
31.11 Get GNSS time and date +UGZDA....699
31.12 Get GNSS fix data +UGGGA....699
31.13 Get geographic position +UGGLL....700
31.14 Get number of GNSS satellites in view +UGGSV....701
31.15 Get recommended minimum GNSS data +UGRMC....702
31.16 Get course over ground and ground speed +UGVTG....703
31.17 Get satellite information +UGGSA....703
31.18 Ask for localization information +ULOC....704
31.19 Ask for time information +UTIME....707
31.20 Localization information request status unsolicited indication +ULOCIND....709
31.21 Specify the device autonomous solution +ULOCAID....710
31.22 GNSS sensor configuration +ULOCGNSS....711
31.23 Configure cellular location sensor (CellLocate®) +ULOCCELL....713

32 Location Services....715
32.1 LCS positioning capabilities configuration +UDCONF=70....715
32.2 Mobile originated location request +CMOLR....716
32.3 Mobile terminated location request notification +CMTLR....718
32.4 Mobile terminated location request disclosure allowance +CMTLRA....719
32.5 Report mobile originated location request error +CMOLRE....720
32.6 LCS event notification +ULCSEVT....721

33 DTMF....722
33.1 DTMF detection +UDTMFD....722
33.2 Local and in-band DTMF tone generation configuration +UDCONF=31....724

34 eCall....725
34.1 Introduction....725
34.2 eIM sends and receives data +UECALLDATA....726
34.3 IVS eIM voice control +UECALLVOICE....729
34.4 eCall configuration +UECALLSTAT....734
34.5 eCall and InBM test configuration +UDCONF=90....735
34.6 eCall type +UECALLTYPE....737
34.7 Initiate eCall +CECALL....738
34.8 eCall audio path mode setting +UECALLCFG....739

35 I^2C....741

35.1 Introduction....741
35.2 I²C open logical channel +UI2CO....741
35.3 I²C write to peripheral +UI2CW....742
35.4 I²C read from peripheral +UI2CR....743
35.5 I²C read from peripheral register +UI2CREGR....744
35.6 I²C close logical channel +UI2CC....744

36 SAP....746
36.1 Introduction....746
36.2 SAP mode activation +USAPMODE....746
36.3 SAP mode indications +USAPIND....748

37 Networking....749
37.1 Introduction....749
37.2 Change the boot mode configuration +UBMCONF....750
37.3 Configure the Ethernet over USB IP network +UIPCONF....751
37.4 Interface configuration +UIFCONF....752
37.5 Get the USB IP configuration +UIPADDR....755
37.6 IP routing configuration +UIPROUTE....757
37.7 IP tables configuration +UIPTABLES....758
37.8 Configure PDP/EPS bearer connection type over USB +UDPDP....760
37.9 RNDIS driver optimization configuration +UDCONF=67....761
37.10 Automatic default gateway route handling mechanism control +UDCONF=64....762

38 Wi-Fi....763
38.1 Introduction....763
38.2 Web User Interface (WebUI)....766
38.3 Wi-Fi module power mode, connection manager and Cellular / Wi-Fi conflict detection +UWCFG....767
38.4 Wi-Fi access point physical layer configuration +UWAPCFG....768
38.5 Wi-Fi access point network layer configuration +UWAPIPCFG....770
38.6 Wi-Fi station physical layer configuration +UWSTACFG....771
38.7 Wi-Fi station network layer configuration +UWSTAIPCFG....773
38.8 Wi-Fi station signal level indicator +UWSTACSQ....774
38.9 Wi-Fi access point connected stations list +UWAPSTALIST....775
38.10 Wi-Fi access point MAC address +UWAPMACADDR....775
38.11 Web user interface configuration +UWWEBUI....776
38.12 Web user interface customization through FTP service +UWWEBUIFTP....776
38.13 Wi-Fi module firmware reset +UWFWRESET....777
38.14 Wi-Fi network scan +UWSCAN....778
38.15 Maximum allowed output power configuration +UWMP....779
38.16 Wi-Fi regulatory domains block configuration +UWREGBLOCK....780
38.17 Wi-Fi test mode +UWTEST....781

A Appendix: Error result codes....783
A.1 Mobile termination error result codes +CME ERROR....783
A.2 Message service error result codes +CMS ERROR....787
A.3 +CEER error result codes....791
A.4 Firmware install final result codes....803
A.5 Firmware install with signature verification final result codes....805
A.6 FOAT error result codes....805
A.7 Dynamic DNS unsolicited indication codes....806
A.8 Internal TCP/UDP/IP stack class error codes....807
A.9 Internet suite error classes....809
A.10 IP change notification error result codes....814
A.11 Ping error result codes....814
A.12 Mobile termination error result codes....815

B Appendix: AT Commands List....816
B.1 Parameters stored in profiles....890
B.2 Parameters stored in non volatile memory....896

B.3 Saving AT commands configuration....906
B.4 Estimated command response time....906
B.5 Multiple AT command interfaces....907

C Appendix: UDP Direct Link workflow....909

C.1 Data from the IP network to the external port....909
C.2 Data from the external port to the IP network....909

D Appendix: Glossary....911

Related documents....914

Revision history....919

Contact....930

1 AT command settings

u-blox cellular modules provide at least one physical serial interface that is compliant to V.24 [26]. When the module is powered on, it enters the command mode. For more details on command mode, see Chapter 1.1.

For module and hyper terminal connection and settings see the corresponding evaluation kit user guide.

1.1 Definitions

In this document the following naming conventions are used:

- MT (Mobile Terminal) or DCE (Data Communications Equipment): u-blox cellular module
- TE (Terminal Equipment) or DTE (Data Terminal Equipment): terminal that issues the command to the module
- TA (Terminal Adaptor): the function, integrated in the MT, of supporting AT command interface according to the applicable standards
- ME (Mobile Equipment): equivalent to MT, it is used to refer to the device itself regardless of the inserted SIM card

The terms DCE and DTE are used in the serial interface context.

☞ TOBY-L4 / TOBY-L2 / MPCI-L2 / LARA-R2 / TOBY-R2 / SARA-U2 / LISA-U2 / LISA-U1 / SARA-G4 / SARA-G3 / LEON-G1
u-blox cellular modules can implement more than one interface between the DTE and the DCE, either virtual interfaces (multiplexer channels) or physical interfaces (UART, USB, SPI, etc., when available). Each interface works as specified by the followings definitions. If not differently stated, all the subsequent descriptions are applicable to each interface. Appendix B.5 describes the different behaviour among the interfaces in reference to the AT command interface.

☞ See the corresponding module data sheet for the list of available AT command interfaces.

☞ SARA-U201-04A / SARA-U201-04B / SARA-U201-04X / SARA-U270-04B / SARA-G340-02S / SARA-G340-02X / SARA-G350-02A / SARA-G350-02S / SARA-G350-02X
Two UART AT interfaces can be used at the same time (it is not the default behaviour).
See +USIO command description for details on how to set such behaviour.
According to the terminology used in the data sheet, UART is the 9-wire asynchronous serial interface, while AUX UART is the 3-wire auxiliary asynchronous interface.
The same naming will be used in the rest of the document (when not clearly specified, the description shall be considered applicable to both the interfaces).

The DCE/MT interface can operate in these modes:

- **Command mode**: the DCE waits for AT command instructions. The DCE interprets all the characters received as commands to execute. The DCE may send responses back to the DTE indicating the outcome of the command or further information without having received any commands by the DTE (e.g. unsolicited response code - URC). Any communication in the command mode (in both directions) is terminated by the command line termination character.
- **Data mode**: the DCE transfers data after having sent the "CONNECT" string; all the characters sent to the DCE are intended to be transmitted to the remote party. Any further characters received over the serial link are deemed to be from the remote party, and any characters sent are transmitted to the remote party. The DCE enters data mode immediately after it makes a Circuit Switched Data (CSD) or Packet Switched Data (PSD) connection.
- **Online command mode**: the DCE has a data connection established with a remote party, but treats signals from the DTE as command lines and sends back responses and unsolicited indications to the DTE.
- **AT commands over an IP connection**: the DCE is accepting a TCP connection on a specific TCP port. The DTE can connect via TCP protocol to the port and can send commands over this TCP connection. The DCE may send responses back to the DTE via the same TCP connection. The communication over IP connection is denoted by a set of two ports: 1) AT command port; 2) binary data port. The binary data port is used for the exchange of binary data between the DCE and DTE. For more details, on the configuration of the TCP ports see +UIFCONF.

☞ TOBY-L2 / MPCI-L2 / LARA-R2 / TOBY-R2 / SARA-U2 / LISA-U2 / LISA-U1 / SARA-G4 / SARA-G3 / LEON-G1
The AT commands over IP connection is not supported.

☞ TOBY-L2 / MPCI-L2 / LARA-R2 / TOBY-R2 / SARA-U2 / LISA-U2 / LISA-U1 / SARA-G4 / SARA-G3 / LEON-G1
For more details on PSD connection see the +UPSD, +UPSDA and +UPSND commands description.

☞ SARA-G3 / LEON-G1
For more details on CSD connection see the +UCSD, +UCSDA and +UCSND commands description.

☞ SARA-U201-04A / SARA-U201-04B / SARA-U201-04X / SARA-U270-04B / SARA-G340-02S / SARA-G340-02X / SARA-G350-02A / SARA-G350-02S / SARA-G350-02X
The AUX UART only supports the command mode. CSD or PSD connection are not allowed.

☞ TOBY-L4
The online command mode is not supported.

1.1.1 Switch from data mode to online command mode

It is possible to switch from data mode to online command mode (when a data connection is established) in the following ways:

- with the escape sequence: for more details see the S2 command description
- via a DTR transition: during data mode, the current DTR state is not important, but only its transition. Furthermore, only the DTR transition from ON to OFF is detected; it can be used to control the switch to online command mode, or to command mode (the data connection is released). For more details see the Table 18 and the Table 19

To switch back to data mode from online command mode the O command is used. For more details see also the &D command.

1.1.2 Command description

The AT commands configure and enable the cellular module functionalities according to 3GPP normative and u-blox specifications. The AT commands are issued to the module via a hyper terminal through a command line and are described in the following sections. A general description of each command is provided including the functionalities, the correct syntax to be provided by the TE/DTE, the allowed responses and an example. The command description defines each named parameter with its type, its range (valid / acceptable values), the default value (when available) and the factory-programmed value (when applicable).

For default value it is intended the value automatically set if the parameter is omitted and at the module power-on (if the command setting is not stored in NVM/profile). For factory-programmed value it is intended the value set at the module power-on when the setting is not modified respect with the manufacturer setting; it is valid for the commands that store the setting in NVM/profile.

The summary table on the top of each command section and the Appendix B lists all the u-blox cellular modules that support that command.

☞ The example provided in the command description refers only to the handling provided by the command. It may be not valid for all the products which the document is applied to. The list of allowed values for a specific product is provided in the corresponding "Defined values" section.

☞ In this document <CR><LF> are intentionally omitted in the command syntax.

☞ If a parameter is omitted, no value will be inserted between the two commas indicating the interested parameter in the command line sent by the DTE.

1.1.3 Default values

If the command parameters are optional, they can be left out in the command line. If not otherwise specified, the default values are assumed as follows:

- For parameters of type Number, the default value is 0
- For parameters of type String, the default value is an empty string

1.1.4 Command line

The AT commands are typically issued to the cellular modules using a command line with the following generic syntax:

```
"AT"<command_name><string><S3_character>
```

Where:

- "AT": prefix to be set at the beginning of each command line
- <command_name>: command name string; it can have a "+" character as prefix
- <string>: string consisting of the parameters value following the syntax provided in this manual
  The following rules are used when describing the command syntax:
  - <...>: the name in angle brackets is a parameter. The brackets themselves do not appear in the command line
  - [...]: the square brackets represent the optional parameters of a command or an optional part of the DCE information text response. Brackets themselves do not appear in the command line. When a parameter is not given, the value will be set to the default value provided in the command description

  Parameter types:
  - Number: positive and negative counting numbers, as well as zero {..., -2, -1, 0, 1, 2,...}.
  - String: sequence of characters enclosed within quotation marks (" ").
- <S3_character>: command line termination character; the factory-programmed termination character is <CR>

☞ The maximum length of the command line is the maximum number of characters which can be accepted on a single command line (including the command line termination character).

☞ TOBY-L4 / TOBY-L2 / MPCI-L2 / LARA-R2 / TOBY-R2 / SARA-U2 / LISA-U2 / LISA-U1 / SARA-G3 / LEON-G1
The command line is not case sensitive unless autobauding is enabled; in this case the prefix "AT" must be typed either as "AT" or "at"; other combinations ("aT" or "Ta") are not allowed.

☞ SARA-G4
In order to synchronyze the UART interface, issue the first AT command with the "AT" string in uppercase.

☞ When writing or sending an SMS, Ctrl-Z or ESC terminates the command; <CR> is used between the two parts of the SMS (address and text).

The serial interface driver generally does not allow a new command until the previous one has been terminated by "OK" final result code or by an error result code. In specific cases (see the abortability attribute), the command execution may be aborted if a character is sent to DCE before the command has ended.

☞ TOBY-L4
The command execution is aborted only if an AT command (the "AT" string suffices) is issued before the command has ended.

1.1.4.1 Concatenation of AT commands

☞ TOBY-L4
It is not possible to concatenate the AT commands.

More than one AT command can be entered on the same command line. The "AT" prefix must be provided only at the beginning of the command line. Each command must be separated by using a semicolon as delimiter only if the command has a "+" character as prefix.

```
Example: ATI;+CGATT?;+COPS?<CR>
```

If a command in the command line causes an error, or is not recognized as a valid command, then the execution is terminated, the remaining commands in the command line are ignored and an error result code is returned.

If all the commands are correctly executed, only the "OK" final result code of the last command is returned.

☞ TOBY-L2 / MPCI-L2 / LARA-R2 / TOBY-R2 / SARA-U2 / LISA-U2 / LISA-U1 / SARA-G4 / SARA-G3 / LEON-G1
Not all the commands can be entered with other commands on the same command line: +CMGW, +CMGS, +USOWR, +USOST, +UDWNFILE must be used by themselves.

1.1.5 Notes

TOBY-L2 / MPCI-L2

- Any character entered at the end of the command line (e.g. after the <CR> has been entered) will not be discarded but will be processed at the end of the current command execution, namely after the result code has been issued. This usage is deprecated; it is warmly recommended to always wait for the command to end before entering new commands.
- The maximum length of the command line is 1024 characters.
- String parameter type limitations - The following characters are not allowed in the parameter string:

- From 0x00 to 0x1F (from NUL to US)
- 0x22 (")
- 0x5C (\)
- 0xA2 (¢)
- 0xDC (Ü)
- From 0x80 to 0x9F (From ? to Y)

TOBY-L4 / LARA-R2 / TOBY-R2

- The maximum length of the command line is 1024 characters.
- String parameter type limitations - The following characters are not allowed in the parameter string:
  - 0x00 (NUL)
  - 0x0D (CR)
  - 0x15 (NAK)
  - 0x22 (")
  - 0x2C (,)

SARA-U2 / LISA-U2 / LISA-U1

- The maximum length of the command line is 1024 characters.
- String parameter type limitations - The following characters are not allowed in the parameter string:
  - 0x00 (NUL)
  - 0x0D (CR)
  - 0x15 (NAK)
  - 0x22 (")

SARA-G4 / SARA-G3 / LEON-G1

- The maximum length of the command line is 544 characters.
- String parameter type limitations - The following characters are not allowed in the parameter string:
  - 0x00 (NUL)
  - 0x0D (CR)
  - 0x15 (NAK)
  - 0x22 (")

1.1.6 Information text responses and result codes

The AT command response comprises an optional information text string and a final result code that can assume the format as follows:

- **Verbose format:**
  Information text response(s): <S3_character><S4_character><text><S3_character><S4_character>
  Final result code: <S3_character><S4_character><verbose code><S3_character><S4_character>
- **Numerical format:**
  Information text response(s): <text><S3_character><S4_character>
  Final result code: <numerical_code><S3_character>

where

- <S3_character> is the command line termination character
- <S4_character> is the linefeed character

☞ TOBY-L4
The V AT command configures the result code in numeric or verbose format.

☞ TOBY-L2 / MPCI-L2 / LARA-R2 / TOBY-R2 / SARA-U2 / LISA-U2 / LISA-U1 / SARA-G4 / SARA-G3 / LEON-G1
The V AT command configures the result code in numeric or verbose format.
The command line termination character can be set with S3 AT command.
The linefeed character can be set with S4 AT command.

Table 1 lists the allowed result codes.

Verbose	Numeric	Result code type	Description
OK	0	Final	Command line successfully processed and the command is correctly executed
CONNECT	1	Intermediate	Data connection established

Verbose	Numeric	Result code type	Description
RING	2	Unsolicited	Incoming call signal from the network
NO CARRIER	3	Final	Connection terminated from the remote part or attempt to establish a connection failed
ERROR	4	Final	General failure. The AT+CMEE command configures the error result format
NO DIALTONE	6	Final	No dialtone detected
BUSY	7	Final	Engaged signal detected (the called number is busy)
NO ANSWER	8	Final	No hang up detected after a fixed network timeout
CONNECT<data rate>	9	Intermediate	Same as CONNECT including also the data rate (data call). ☞ In case of data/fax call, see Circuit 108/2, +++ behaviour for the different &D: summarizing table to return in command mode and disconnect the call.
Command aborted	3000	Final	Command execution aborted issuing a character to the DCE

Table 1: Allowed result codes

☞ LARA-R2 / TOBY-R2
In case of a VoLTE call redirected to CS plane the `NO CARRIER` final result code will be printed when the CSFB call is terminated from the remote part or the CSFB call establishment fails.
In case of a VoLTE call experiencing entrance into out of coverage area, if service coverage cannot be regained within 10 s the call will be locally dropped and `NO CARRIER` will be printed; if the call is a VoLTE emergency call, `NO CARRIER` will not be printed and no local call release will be performed because the emergency call shall be maintained despite the speech interruption.

☞ TOBY-L2 / MPCI-L2
The AT commands can not be aborted, except if explicitly stated in the corresponding AT command description.

☞ LARA-R2 / TOBY-R2 / SARA-U2 / LISA-U2 / LISA-U1
When a command is aborted the `ABORTED` final result code (numeric result code: 18) is displayed.

☞ SARA-G4 / SARA-G3 / LEON-G1
When a command is aborted the OK result code (numeric result code: 0) is displayed.

Intermediate outputs as well as descriptive outputs of a command are formatted as information text responses; if more than one string has to be printed out (see for example the +CGDCONT command description), additional command line termination and linefeed characters may be inserted for sake of readability.

If the command is not accepted by the MT an error result code will be displayed. The AT+CMEE command configures the error result code format as follows:

- "+CMS ERROR: <err>" for SMS-related AT commands
- "+CME ERROR: <err>" for any other AT commands

where <err> represents the verbose or numeric error result code depending on the +CMEE AT command setting.

The most typical error result codes are the following:

- If the command is not supported or unknown, either "+CME ERROR: unknown" or "+CME ERROR: operation not supported" is sent
- If the command syntax is wrong, "+CME ERROR: operation not supported" is sent ("+CMS ERROR: operation not supported" for SMS related commands)

☞ TOBY-L2 / MPCI-L2
The AT command parser accepts optional commas at the end of the command line, as well as String parameters not delimited by "".

The list of all the possible error result codes is available in Appendix A.1 and Appendix A.2. For some commands only the "ERROR" final result code is displayed and is documented in the command description.

☞ The proprietary AT commands supporting the following features implement a different error management and provide different error result codes:

- Firmware update Over The Air: see the Appendix A.4
- Firmware update Over AT command: see the Appendix A.6

- DNS: see the Appendix A.7 and Appendix A.8
- TCP and UDP connections, FTP, HTTP and SMTP: see the Appendix A.8, Appendix A.9, Appendix A.9.1, Appendix A.9.2, Appendix A.9.3
- TCP and UDP connections, FTP and HTTP: see the Appendix A.8, Appendix A.9, Appendix A.9.1, Appendix A.9.2
- IP change notification: see the Appendix A.10
- Ping: see the Appendix A.11

The corresponding sections provide more details for retrieving the error result codes for these operations.

1.2 Storing of AT commands setting

Several user settings may be stored in the cellular module's memory. Some are directly stored in the non volatile memory (NVM), while the others are organized into two personal profiles. The first profile is the default profile, whose data is by default loaded during the module's power on.

Appendix B.2 lists the complete settings that can be directly stored in NVM and the corresponding commands.

Appendix B.1 lists the complete settings stored in the profiles and the corresponding commands.

☞ TOBY-L2 / MPCI-L2 / LARA-R2 / TOBY-R2 / SARA-U2 / LISA-U2 / LISA-U1 / SARA-G4 / SARA-G3 / LEON-G1
More details about loading, storing and updating profiles can be found in the command descriptions for: ATZ, AT&F, AT&W, AT&V, and AT&Y.

☞ TOBY-L4
The module allows to store +COPS and S0 settings in the single profile it supports: since only one profile is available, AT&Y command is not supported; more details about updating such profile on TOBY-L4 series can be found in the command description of AT&W.

1.3 S-parameters

The S-parameters, as specified in ITU-T recommendation V250 [20], constitute a group of commands that begin with the string "ATS". They are generally indicated as S registers and are used to configure the way the module operates. Their syntax is:

```
ATS<parameter_number>?
```

```
ATS<parameter_number>=<value>
```

The number following the "ATS" is the referenced S parameter.

u-blox cellular modules support the following set of S-parameters (<parameter_number>):

AT command	S Number	Description
S0	0	Automatic answer setting
S2	2	Escape character setting
S3	3	Command line termination character setting
S4	4	Response formatting character setting
S5	5	Command line editing character setting
S6	6	Pause before blind dialling setting
S7	7	Connection completion timeout setting
S8	8	Command dial modifier time setting
S10	10	Automatic disconnect delay setting
S12	12	Escape prompt delay setting

☞ If a <parameter_number> other than those listed above is introduced, the S command returns an error result code (+CME ERROR: operation not supported).

2 General operation

2.1 Start up and initialization

The characteristics of the boot of the cellular device vary from module to module and are described in the corresponding System Integration Manual; during this phase the module might be not responsive on the AT interface until all necessary SW modules have been installed (e.g. USB drivers); monitoring of the greeting text, where supported, can help in detecting the successful end of the boot phase.

☞ TOBY-L4
After a successful boot and successful AT command interface initialization, if the USB cable is already inserted, an +AT: READY URC is sent to the AT command interface. AT commands can be issued only after +AT: READY URC is received. In case of USB cable detach/attach the +AT: READY URC is received only after at least a byte has been sent to the module.

A complete start up to be able to operate on the cellular network can take place only with a SIM card.

If the SIM card has enabled the PIN check, some commands answer with "+CME ERROR: SIM PIN required" and most cellular functionalities are not started. After entering the required PIN via the +CPIN command, or if booting with a SIM with disabled PIN check, SIM initialization is carried out and a lot of SIM files are read: it is possible that some commands (e.g. phonebook AT commands) are affected by this preliminary phase, resulting in a temporary error response.

2.1.1 Auto-registration

If the +COPS <mode> parameter in the profiles or in NVM is left to its factory-programmed value 0 or set to 1, after SIM initialization, all u-blox modules will automatically perform PLMN selection and registration for circuit switched/non EPS services as well as packet switched/EPS services. Auto-registration (sometimes called also "auto-COPS", not to be confused with automatic <mode>=0) will be triggered also at SIM insertion, for modules supporting SIM hot insertion, or at SIM driver recovery, occurring when the communication with the SIM card is re-established by the module after an unrecoverable error, caused e.g. by mechanical vibrations or electrical interference. If no SIM is inserted in the module, the module will anyway select a cell of the cellular network and try to maintain synchronization with it in limited service.

The radio access technology selected by the module at start up is defined by the <PreferredAct> parameter of the +URAT command; afterwards the module will reselect the RAT based on the requirements of the cellular standards it complies with and it is not possible to force it to remain in a given RAT unless it is locked on it via +URAT or on a specific cell via +UCELLLOCK (if supported).

The user can retrieve the result of the auto-registration by polling the registration status commands (e.g. +CREG/+CGREG/+CEREG/+CIREG) or enabling their unsolicited notifications. If auto-COPS is running, at boot time or at SIM insertion, network service commands issued by the user might have a longer response time than expected; this is particularly visible when the module is switched on in a jammed condition, or with a roaming SIM card that shall perform several registration attempts before gaining access to a VPLMN. In case of failures of the automatic registration whose cause cannot be retrieved via +CEER, it is suggested to disable auto-COPS starting the module in +COPS:2 or in airplane mode +CFUN:4 and trigger registration with AT commands.

2.1.2 Operational restrictions

Operational restrictions may derive from several settings: PIN required, SIM lock, invalidation of the IMEI or SIM credentials by the Mobile Network Operator (MNO) during the registration procedure, FDN enabled. Restrictions to access the network are also applied by the module in any one of these conditions:

- In eCall only state (for all modules supporting the eCall feature)
- In minimum functionality power modes (+CFUN: 0, +CFUN: 4, +CFUN: 19, +CFUN: 127), and even if the module is restarted in +CFUN: 4 or +CFUN: 19 modes, because they are persistent
- MPCI-L2 only - when the W_DISABLE# line is asserted
- TOBY-L2 / SARA-U2 / LISA-U2 - The Radio Policy Manager has reached the maximum number of registrations or PDP contexts activation per hour (only with AT&T SIM cards [61])

In case the module is in operational restricted state, it may reject all or specific service requests (e.g. operator selection, connection establishment).

☞ MPCI-L2
When the W_DISABLE# line is asserted, to SW reset the module, AT+CFUN=0,1 or AT+CFUN=4,1 may be used as they refer to minimum functionality power modes.

☞ TOBY-L2 / MPCI-L2
If the SIM is not inserted or the PIN is required and not inserted, the network scan (+COPS=?) is not allowed.

2.2 AT commands types

2.2.1 Action command

An action command forces the DCE to print information text or execute a specific action for the command. A typical example of this command type is the provision of the factory-programmed settings of the DCE like manufacturer name, firmware version, etc.

2.2.2 Set command

A set command configures the preferred settings for the specified command. The set command is the only way to set the preferred settings in the DCE. For some commands it is possible to store the current settings in the profile or in the non volatile memory and retrieve them in another connection.

☞ TOBY-L2 / MPCI-L2
The set command without parameters (e.g. AT+CGEQREQ=) is syntactically equivalent to the action command (e.g. AT+CGEQREQ).

2.2.3 Read command

A read command provides the current setting of the command parameters. It is used to find out the current command configuration.

2.2.4 Test command

A test command provides the list of the values allowed by each parameter of the command.

2.2.5 Unsolicited Result Code (URC)

An unsolicited result code is a string message (provided by the DCE) that is not triggered as a information text response to a previous AT command and can be output, when enabled, at any time to inform the DTE of a specific event or status change.

The URC can have the same name of the command that enables it (e.g. +CREG) or can be enabled by another command (e.g. the +CMTI URC must be enabled by AT+CNMI AT command).

2.2.5.1 URCs presentation deferring

Since the URCs are text responses issued by the DCE without being requested by the DTE, their occurrence is completely uncorrelated to an AT command execution. Therefore, a collision between a URC and an AT command response might occur and it may lead the DTE to misunderstand the URC as part of the AT command's text response or viceversa.

The module avoids this collision by delaying the URCs presentation in case the AT command interface is busy. The AT command interface can be busy in the following cases:

- During a data call (data mode)
- During the execution of an AT command in command or online command mode

The command execution starts when the command line is completed by the command line termination character and the AT interpreter in the module accepts it; the command execution ends when the final result code for the command is sent out. Inside this period, the module is not allowed to send the not buffered URCs. For most of the messages, the DCE needs to be configured whether or not to send a URC. After enabling, for most of the URCs, if the AT command interface is busy, the pending URCs are buffered and their sending to the DCE is deferred. The RING indication is always generated as an unsolicited result code. The NO CARRIER indication is generated as an unsolicited result code when it has not to be considered the final response for the executing command (e.g.: ATH); in case it is handled as an unsolicited result code, it follows the rule of the other URCs.

Generally, the buffered URCs are sent to the terminal as soon as the terminal exits the data mode or the command execution is terminated. An exception to this behavior is implemented for the following URCs classes:

Class	AT command to configure the class
Reception of a new SMS related URCs	AT+CNMI AT command
+CIEV URCs	AT+CMER AT command
+CGEV URCs	AT+CGEREP AT command

For the above classes, it is possible to select the presentation strategy in case of AT interface busy according the 3GPP TS 27.007 [2]; the buffering or discarding are the two possible choices (URCs are lost in the latter case). This is done by means of the corresponding AT command (see the AT command listed in the table above). If the URCs are enabled or for the three described classes of URCs, the buffered URCs are sent out only when the AT interface is in idle again; this occurs as soon as:

- The data mode is released (the data call is disconnected)
- The final result code for an AT command is issued

☞ LARA-R204
The presentation of +UCMT3GPP2 URCs is not deferred and is always routed to the AT interface.

☞ LEON-G1
The modules does not support the full URCs buffering/deferring capability: only the presentation deferring of the three above specified URCs classes is supported.

☞ The DTE should wait some time (the recommended value is at least 20 ms) after the reception of an AT command final result code or URC before issuing a new AT command to give the DCE the opportunity to transmit the buffered URCs. Otherwise the collision of the URCs with the subsequent AT command is still possible.

☞ In case multiple AT interfaces are available, it should be advisable to use one of the different AT interfaces to manage all the user enabled URCs, while use the others ones to send AT commands and receive their responses.
Anyway URCs related to external causes (e.g. RING) are issued on all interfaces.

2.2.6 Intermediate Result Code (IRC)

An intermediate result code is a string message (provided by the DCE) which provides to the DTE some information about the processing status of the pending AT command.

3 IPC - Inter Processor Communication

3.1 Multiplexing mode +CMUX

+CMUX						
Modules	TOBY-L200-02S TOBY-L200-03A TOBY-L200-03S TOBY-L201 TOBY-L210-02S TOBY-L210-03A TOBY-L210-03S TOBY-L210-60S TOBY-L210-62S TOBY-L220 TOBY-L280					
	LARA-R2 TOBY-R2					
	SARA-U2 LISA-U2 LISA-U1					
	SARA-G4 SARA-G3 LEON-G1					
Attributes	**Syntax**	**PIN required**	**Settings saved**	**Can be aborted**	**Response time**	**Error reference**
	partial	No	No	No	-	+CME Error

3.1.1 Description

Enables the multiplexing protocol control channel as defined in 3GPP TS 27.010 [46]. The command sets the parameters for the control channel. The result code is returned using the old interface speed. The parameters become active only after sending the OK result code.

The usage of +CMUX command during the multiplexing is not allowed.

The multiplexer configuration is as follows:

Channel	Control channel	AT commands / data connection	GNSS tunneling	SAP (SIM Access Profile)
TOBY-L2	Channel 0	Channel 1 - 5		
TOBY-R2	Channel 0	Channel 1 - 5	Channel 6[1]	
LARA-R202 / LARA-R203 / LARA-R220 / LARA-R280	Channel 0	Channel 1 - 5	Channel 6	
LARA-R204 / LARA-R211	Channel 0	Channel 1 - 5		
SARA-U2	Channel 0	Channel 1 - 5	Channel 6	Channel 7
LISA-U2	Channel 0	Channel 1 - 5	Channel 6	Channel 7
LISA-U200-00S	Channel 0	Channel 1 - 5	Channel 6	
LISA-U1	Channel 0	Channel 1 - 5	Channel 6	
SARA-G340 SARA-G350	Channel 0	Channel 1 - 5	Channel 6	
SARA-G450-00C	Channel 0	Channel 1 - 5		
SARA-G300 SARA-G310	Channel 0	Channel 1 - 2		
LEON-G1	Channel 0	Channel 1 - 5	Channel 6	

Table 2: Multiplexer configuration

3.1.2 Syntax

Type	Syntax	Response	Example
Set	AT+CMUX=<mode>[,<subset>[,<port_speed>[,<N1>[,<T1>[,<N2>[,<T2>[,<T3>[,<k>]]]]]]]	OK	AT+CMUX=0,0,,1500,50,3,90 OK
Read	AT+CMUX?	+CMUX: <mode>,[<subset>],<port_speed>,<N1>,<T1>,<N2>,<T2>,<T3>[,<k>] OK	+CMUX: 0,0,0,1500,253,3,254,0,0 OK
Test	AT+CMUX=?	+CMUX: (list of supported <mode>s),(list of supported <subset>s),(list of supported <port_speed>s),(list of supported <N1>s),(list of supported <T1>s),(list of supported <N2>s),(list of supported	+CMUX: (0),(0),,(1-1509),(1-255),(0-5),(2-255),, OK

[1] Not supported by TOBY-R200-02B-00 and TOBY-R202-02B-00

Type	Syntax	Response	Example
		<T2>s),(list of supported <T3>s), (list of supported <k>s) OK	

3.1.3 Defined values

Parameter	Type	Description
<mode>	Number	Multiplexer transparency mechanism: • 0: basic option
<subset>	Number	The way in which the multiplexer control channel is set up: • 0 (default value): UIH frames used only • 1: UI frames used only See Notes for the parameter applicability.
<port_speed>	Number	Transmission rate. The allowed range is 0-7. This parameter is ignored and the value 0 is always displayed in case of read command.
<N1>	Number	Maximum frame size: • Allowed range is 1-1509. • The default value is 31.
<T1>	Number	Acknowledgement timer in units of ten milliseconds. The allowed range is 1-255. This parameter is ignored and the value 253 is always set.
<N2>	Number	Maximum number of re-transmissions: • Allowed range is 0-5. • The default value is 3.
<T2>	Number	Response timer for the multiplexer control channel in units of ten milliseconds. The allowed range is 2-255. This parameter is ignored and the value 254 is always set.
<T3>	Number	Wake up response timer. The allowed range is 0-255. This parameter is ignored and the value 0 is always displayed in case of the read command.
<k>	Number	Window size, for advanced operation with Error Recovery options. The allowed range is 0-255. This parameter is ignored and the value 0 is always displayed in case of the read command.

3.1.4 Notes

- If the multiplexer protocol is not started (the +CMUX set command has not been issued or returned an error result code) and AT+CMEE is set to 2, the +CMUX read command returns the following error result code: +CME ERROR: operation not allowed.
- For complete compatibility between u-blox products, leave the unsupported/unused parameters blank (which are reported as blank by the +CMUX test command).
- <T1> must be lower than or equal to <T2>.

TOBY-L2

- <subset> can only assume the value 0.

LARA-R2 / TOBY-R2 / SARA-U2 / LISA-U2 / LISA-U1

- <subset> can only assume the value 0.
- <T1>, <T2>, <N2> values are ignored, since the related timers are not implemented.

SARA-U201-04A / SARA-U201-04B / SARA-U201-04X / SARA-U270-04B

- On the AUX UART interface, the multiplexer protocol is not supported.

SARA-G4 / SARA-G3

- <subset> can assume the value 0 and 1.
- The range of <T2> is 0-255 (0 means that the timer is ignored).

SARA-G300 / SARA-G310 / SARA-G340-00S / SARA-G340-01S / SARA-G350-00S / SARA-G350-00X / SARA-G350-01B / SARA-G350-01S

- <subset> can only assume the value 0.

SARA-G340-02S / SARA-G340-02X / SARA-G350-02A / SARA-G350-02S / SARA-G350-02X

- On the AUX UART interface, the multiplexer protocol is not supported.

LEON-G1

- <subset> can only assume the value 0.
- The requested <N1> value is correctly set, but the +CMUX read command returns a value higher (<N1>+6 or <N1>+7), since it returns the maximum multiplexer protocol frame size (including the 6 or 7 bytes of the frame header). This does not affect the multiplexer protocol behavior, which uses the requested value.
- The range of <T2> is 0-255 (0 means that the timer is ignored).

LEON-G100-06S

- <port_speed>, <T3> and <k> can only assume the value 0.

4 General

4.1 Manufacturer identification +CGMI

+CGMI						
Modules	All products					
Attributes	**Syntax**	**PIN required**	**Settings saved**	**Can be aborted**	**Response time**	**Error reference**
	full	No	No	No	-	+CME Error

4.1.1 Description

Text string identifying the manufacturer.

4.1.2 Syntax

Type	Syntax	Response	Example
Action	AT+CGMI	<manufacturer> OK	u-blox OK
Test	AT+CGMI=?	OK	

4.1.3 Defined values

Parameter	Type	Description
<manufacturer>	String	Manufacturer name

4.2 Manufacturer identification +GMI

+GMI						
Modules	All products					
Attributes	**Syntax**	**PIN required**	**Settings saved**	**Can be aborted**	**Response time**	**Error reference**
	full	No	No	No	-	+CME Error

4.2.1 Description

Text string identifying the manufacturer.

4.2.2 Syntax

Type	Syntax	Response	Example
Action	AT+GMI	<manufacturer> OK	u-blox OK

4.2.3 Defined values

Parameter	Type	Description
<manufacturer>	String	Manufacturer name

4.3 Model identification +CGMM

+CGMM						
Modules	All products					
Attributes	**Syntax**	**PIN required**	**Settings saved**	**Can be aborted**	**Response time**	**Error reference**
	full	No	No	No	-	+CME Error

4.3.1 Description

Text string identifying the model identification.

4.3.2 Syntax

Type	Syntax	Response	Example
Action	AT+CGMM	<model> OK	LISA-U200 OK
Test	AT+CGMM=?	OK	

4.3.3 Defined values

Parameter	Type	Description
<model>	String	Name of model

4.4 Model identification +GMM

+GMM						
Modules	All products					
Attributes	**Syntax**	**PIN required**	**Settings saved**	**Can be aborted**	**Response time**	**Error reference**
	full	No	No	No	-	+CME Error

4.4.1 Description

Text string identifying the model identification.

4.4.2 Syntax

Type	Syntax	Response	Example
Action	AT+GMM	<model> OK	LISA-U120 OK

4.4.3 Defined values

Parameter	Type	Description
<model>	String	Name of model

4.5 Firmware version identification +CGMR

+CGMR						
Modules	All products					
Attributes	**Syntax**	**PIN required**	**Settings saved**	**Can be aborted**	**Response time**	**Error reference**
	full	No	No	No	-	+CME Error

4.5.1 Description

Returns the firmware version of the module.

4.5.2 Syntax

Type	Syntax	Response	Example
Action	AT+CGMR	<version> OK	11.40 OK
Test	AT+CGMR=?	OK	

4.5.3 Defined values

Parameter	Type	Description
<version>	String	Firmware version

4.6 Firmware version identification +GMR

+GMR						
Modules	All products					
Attributes	**Syntax**	**PIN required**	**Settings saved**	**Can be aborted**	**Response time**	**Error reference**
	full	No	No	No	-	+CME Error

4.6.1 Description

Returns the firmware version of the module.

4.6.2 Syntax

Type	Syntax	Response	Example
Action	AT+GMR	<version>	11.40
		OK	OK

4.6.3 Defined values

Parameter	Type	Description
<version>	String	Firmware version

4.7 IMEI identification +CGSN

+CGSN						
Modules	All products					
Attributes	**Syntax**	**PIN required**	**Settings saved**	**Can be aborted**	**Response time**	**Error reference**
	partial	No	No	No	-	+CME Error

4.7.1 Description

Returns the product serial number, the International Mobile Equipment Identity (IMEI) of the MT.

4.7.2 Syntax

Type	Syntax	Response	Example
Action	AT+CGSN[=<snt>]	<sn>	004999010640000
		OK	OK
Test	AT+CGSN=?	+CGSN: (list of supported <snt>s)	+CGSN: (0-3,255)
		OK	OK

4.7.3 Defined values

Parameter	Type	Description
<sn>	String	Serial number, by default the IMEI
<snt>	Number	It indicates the requested serial number type. Depending on <snt> value, the <sn> parameter in the information text response provides different information: • 0 (default value): International Mobile station Equipment Identity (IMEI) • 1: International Mobile station Equipment Identity (IMEI) • 2: International Mobile station Equipment Identity and Software Version number (IMEISV) • 3: Software Version Number (SVN) • 255: IMEI (not including the spare digit), the check digit and the SVN

4.7.4 Notes

TOBY-L4906-50A / TOBY-L2 / MPCI-L2 / SARA-U260-00S / SARA-U270-00S / SARA-U270-00X / SARA-U280-00S / LISA-U200-00S / LISA-U200-01S / LISA-U200-02S / LISA-U200-52S / LISA-U200-62S / LISA-U230 / LISA-U260 / LISA-U270 / LISA-U1 / SARA-G4 / SARA-G3 / LEON-G1

- The <snt> parameter is not supported.

- The response to the test command does not provide the information text response.

4.8 IMEI identification +GSN

+GSN						
Modules	All products					
Attributes	**Syntax**	**PIN required**	**Settings saved**	**Can be aborted**	**Response time**	**Error reference**
	full	No	No	No	-	+CME Error

4.8.1 Description

The commands handling is the same of +CGSN.

4.8.2 Syntax

Type	Syntax	Response	Example
Action	AT+GSN[=<snt>]	<sn> OK	004999010640000 OK
Test	AT+GSN=?	OK	

4.8.3 Defined values

See +CGSN AT command.

4.9 Identification information I

I						
Modules	All products					
Attributes	**Syntax**	**PIN required**	**Settings saved**	**Can be aborted**	**Response time**	**Error reference**
	partial	No	No	No	-	+CME Error

4.9.1 Description

Returns some module information as the module type number and some details about the firmware version.

☞ The information text response of ATI9 contains the modem version and the application version of the module where applicable; it returns "Undefined" where not applicable.

4.9.2 TOBY-L4 / TOBY-L2 / MPCI-L2 / LARA-R2 / TOBY-R2 / SARA-U2 / LISA-U2 / LISA-U1 / SARA-G4 / SARA-G3 / LEON-G1 Syntax

Type	Syntax	Response	Example
Action	**Ordering code request** ATI[0]	<type_number> OK	ATI0 SARA-G350-00S-00 OK
	Modem and application version request ATI9	<modem_version>,<applications_version> OK	ATI9 29.90,A01.00 OK

4.9.3 Defined values

Parameter	Type	Description
<manufacturer>	String	Manufacturer name
<type_number>	String	Product type number
<modem_version>	String	Module modem version
<applications_version>	String	Module application version. Where not applicable the module provides "Undefined"
<SVN>	String	Software Version Number
<IMEI>	String	International Mobile Equipment Identity (IMEI) of the MT

4.10 TE character set configuration +CSCS

+CSCS						
Modules	All products					
Attributes	**Syntax**	**PIN required**	**Settings saved**	**Can be aborted**	**Response time**	**Error reference**
	full	No	No	No	-	+CME Error

4.10.1 Description

Selects the TE character set.

☞ The selected character set is actually used for encoding/decoding of only the AT commands' string type parameters whose description explicitly references the +CSCS setting itself.

4.10.2 Syntax

Type	Syntax	Response	Example
Set	AT+CSCS=<chset>	OK	AT+CSCS="IRA" OK
Read	AT+CSCS?	+CSCS: <chset> OK	+CSCS: "IRA" OK
Test	AT+CSCS=?	+CSCS: (list of supported <chset>'s) OK	+CSCS: ("IRA","GSM","PCCP437", "8859-1","UCS2","HEX") OK

4.10.3 Defined values

Parameter	Type	Description
<chset>	String	• "IRA" (factory-programmed value): International Reference Alphabet (ITU-T T.50) • "GSM": GSM default alphabet (3GPP TS 23.038) • "PCCP437": PC character set Code Page 437 • "8859-1": ISO 8859 Latin 1 character set • "UCS2": 16-bit universal multiple-octet coded character set (USO/IEC10646); UCS2 character strings are converted to hexadecimal numbers from 0000 to FFFF; e.g. "004100620063" equals three 16-bit characters with decimal values 65, 98 and 99 • "HEX": character strings consist only of hexadecimal numbers from 00 to FF; e.g. "032FE6" equals three 8-bit characters with decimal values 3, 47 and 230; no conversions to the original MT character set shall be done

4.10.4 Notes

TOBY-L4

- <chset>="PCCP437" and "8859-1" are not supported.

TOBY-L2 / MPCI-L2

- <chset>="PCCP437" is not supported.

4.11 International mobile subscriber identification +CIMI

+CIMI						
Modules	All products					
Attributes	**Syntax**	**PIN required**	**Settings saved**	**Can be aborted**	**Response time**	**Error reference**
	full	Yes	No	No	-	+CME Error

4.11.1 Description

Request the IMSI (International Mobile Subscriber Identity).

4.11.2 Syntax

Type	Syntax	Response	Example
Action	AT+CIMI	<IMSI> OK	222107701772423 OK
Test	AT+CIMI=?	OK	

4.11.3 Defined values

Parameter	Type	Description
<IMSI>	Number	International Mobile Subscriber Identity

4.12 Card identification +CCID

+CCID						
Modules	All products					
Attributes	**Syntax**	**PIN required**	**Settings saved**	**Can be aborted**	**Response time**	**Error reference**
	full	No	No	No	-	+CME Error

4.12.1 Description

Returns the ICCID (Integrated Circuit Card ID) of the SIM-card. ICCID is a serial number identifying the SIM.

4.12.2 Syntax

Type	Syntax	Response	Example
Action	AT+CCID	+CCID: <ICCID> OK	+CCID: 8939107800023416395 OK
Read	AT+CCID?	+CCID: <ICCID> OK	+CCID: 8939107900010087330 OK
Test	AT+CCID=?	OK	

4.12.3 Defined values

Parameter	Type	Description
<ICCID>	String	ICCID of the SIM card

4.12.4 Notes

- The command needs of the SIM to correctly work.

4.13 Request complete capabilities list +GCAP

+GCAP						
Modules	All products					
Attributes	**Syntax**	**PIN required**	**Settings saved**	**Can be aborted**	**Response time**	**Error reference**
	full	No	No	No	-	+CME Error

4.13.1 Description

This command requests the list of capabilities, containing the corresponding command names. The Complete Capabilities List command indicates the major capability areas of the MT. Each area is presented by the selection command name of the specific capability area or some other predefined response.

The first response text (+FCLASS) informs that some fax or voice capabilities are present while the second supported area presented with +CGSM shows that all GSM commands of the present document are supported.

4.13.2 Syntax

Type	Syntax	Response	Example
Action	AT+GCAP	+GCAP: <capability_area 1>[, <capability_area 2>[...]] OK	+GCAP: +FCLASS, +CGSM OK
Test	AT+GCAP=?	OK	

4.13.3 Defined values

Parameter	Type	Description
<capability_area>	String	Command name or predefined response of the specific capability area In the example: +FCLASS response text informs that some fax or voice capabilities are present, while +CGSM response text shows that all GSM commands of the present document are supported by the MT

4.14 Repeat last command A/

A/						
Modules	TOBY-L2 MPCI-L2					
	LARA-R2 TOBY-R2					
	SARA-U2 LISA-U2 LISA-U1					
	SARA-G4 SARA-G3 LEON-G1					
Attributes	**Syntax**	**PIN required**	**Settings saved**	**Can be aborted**	**Response time**	**Error reference**
	full	No	No	No	-	+CME Error

4.14.1 Description

Repeats the previously executed command again. Only the A/ command cannot be repeated.

☞ If autobauding is active, the MT is not able to recognize the command and the command A/ cannot be used.

4.14.2 Syntax

Type	Syntax	Response	Example
Action	A/		

4.15 List all available AT commands +CLAC

+CLAC						
Modules	TOBY-L2 MPCI-L2					
	LARA-R2 TOBY-R2					
	SARA-U2 LISA-U2 LISA-U1					
	SARA-G3 LEON-G1					
Attributes	**Syntax**	**PIN required**	**Settings saved**	**Can be aborted**	**Response time**	**Error reference**
	full	No	No	No	-	+CME Error

4.15.1 Description

Causes the MT to return one or more lines of AT commands that are available for the DTE user. Each line contains one AT command.

4.15.2 Syntax

Type	Syntax	Response	Example
Action	AT+CLAC	<AT command 1> [<AT command 2> [...]] OK	

Type	Syntax	Response	Example
Test	AT+CLAC=?	OK	

4.15.3 Defined values

Parameter	Type	Description
<AT command>	String	AT command name

4.16 Help displaying all commands &H

&H						
Modules	TOBY-L2 MPCI-L2					
	LARA-R2 TOBY-R2					
	SARA-U2 LISA-U2 LISA-U1					
	SARA-G3 LEON-G1					
Attributes	**Syntax**	**PIN required**	**Settings saved**	**Can be aborted**	**Response time**	**Error reference**
	partial	No	No	No	-	+CME Error

4.16.1 Description

Lists all the supported commands.

4.16.2 Syntax

Type	Syntax	Response	Example
Action	AT&H	<AT command 1> : <AT command 1 title>[<CR><LF><AT command 2> : <AT command 2 title> [...]] OK	ATA : Answer an Incoming Call ATE : Echo ATH : Hook Control ATV : Enable/Disable verbose response ... AT+UTEST : End User Test ATS : Query or Set an S-register ATD : Dial OK

4.16.3 Defined values

Parameter	Type	Description
<AT command n>	String	AT command name
<AT command n title>	String	AT command title

4.16.4 Notes

TOBY-L2 / MPCI-L2 / SARA-G4 / SARA-G3 / LEON-G1

- The response is:
  <AT command 1>, <AT command 2>, ..., <AT command n>[,<CR><LF><AT command n+1>, ..., <AT command n+m>

  [...]]

  OK

  Example:

  &W, &Y, A, B, E, H, I, L, M, O, P, Q, S0, S10, S12,

  S2, S3, S4, S5, S6, S7, S8, T, V, X, Z, \Q,

  ...

+USORD, +USORF, +USOSO, +USOST, +USOWR, +USPM, +USTN,
+USTOPFILE, +USTS, +UTEST, +UTGN, +UUBF
OK

5 Mobile equipment control and status

5.1 Phone activity status +CPAS

+CPAS						
Modules	TOBY-L4 TOBY-L2 MPCI-L2					
	LARA-R2 TOBY-R2					
	SARA-U2 LISA-U2 LISA-U1					
	SARA-G3 LEON-G1					
Attributes	**Syntax**	**PIN required**	**Settings saved**	**Can be aborted**	**Response time**	**Error reference**
	full	No	No	No	-	+CME Error

5.1.1 Description

Returns the activity status <pas> of the MT.

5.1.2 Syntax

Type	Syntax	Response	Example
Action	AT+CPAS	+CPAS: <pas> OK	+CPAS: 0 OK
Test	AT+CPAS=?	+CPAS: (list of supported <pas>s) OK	+CPAS: (0-5) OK

5.1.3 Defined values

Parameter	Type	Description
<pas>	Number	• 0: ready (MT allows commands from DTE) • 1: unavailable (MT does not allow commands from DTE) • 2: unknown (MT is not guaranteed to respond to instructions) • 3: ringing (MT is ready for commands from DTE, but the ringer is active) • 4: call in progress (MT is ready for commands from DTE, but a call is in progress, e.g. call active, hold, disconnecting) • 5: asleep (ME is unable to process commands from DTE because it is in a low functionality state)

5.1.4 Notes

TOBY-L2 / MPCI-L2

- During a MO call the information text response of the action command returns 4 (call in progress).
- The reported status <pas> of the MT is tied to network status registration.

5.2 Module switch off +CPWROFF

+CPWROFF						
Modules	All products					
Attributes	**Syntax**	**PIN required**	**Settings saved**	**Can be aborted**	**Response time**	**Error reference**
	full	No	No	No	< 40 s	+CME Error

5.2.1 Description

Switches off the MT. During shut-down current settings are saved in module's non-volatile memory.

☞ Using this command can result in the following command line being ignored.

☞ See the corresponding System Integration Manual for the timing and the electrical details of the module power-off sequence via the +CPWROFF command.

☞ MPCI-L2

The command does not switch off the PCIe module but it causes a reset (reboot). The current parameter settings are stored in the NVM performing a network detach, with a subsequent module reset (reboot).

5.2.2 Syntax

Type	Syntax	Response	Example
Action	AT+CPWROFF	OK	
Test	AT+CPWROFF=?	OK	

5.3 Set module functionality +CFUN

+CFUN						
Modules	All products					
Attributes	**Syntax**	**PIN required**	**Settings saved**	**Can be aborted**	**Response time**	**Error reference**
	partial	No	No	No	Up to 3 min	+CME Error

5.3.1 Description

Selects the level of functionality <fun> in the MT.

☞ TOBY-L4 / TOBY-L2 / MPCI-L2 / LARA-R2 / TOBY-R2 / SARA-U2 / LISA-U2 / LISA-U1 / SARA-G4 / SARA-G3 / LEON-G1
If the syntax +CFUN=15 or +CFUN=16 (resets) or +CFUN=127 is used, the rest of the command line, placed after that will be ignored.

☞ TOBY-L4 / TOBY-L2 / MPCI-L2 / LARA-R2 / TOBY-R2 / SARA-U2 / LISA-U2 / LISA-U1 / SARA-G4 / SARA-G3 / LEON-G1
A SW reset started via AT+CFUN=x,1 or AT+CFUN=16 triggers signalling attempts whose number is internally counted by the FW and limited based on mobile network operators' thresholds. The AT&T RPM feature (see also the +URPM AT command) limits the number of SW resets per hour, and might cause the AT command to return an error result code.

5.3.2 TOBY-L4 / TOBY-L2 / MPCI-L2 / LARA-R2 / TOBY-R2 / SARA-U2 / LISA-U2 / LISA-U1 / SARA-G4 / SARA-G3 / LEON-G1 syntax

Type	Syntax	Response	Example
Set	AT+CFUN=<fun>[,<rst>]	OK	AT+CFUN=1 OK
Read	AT+CFUN?	+CFUN: <power_mode>,<STK_mode> OK	+CFUN: 1,0 OK
Test	AT+CFUN=?	+CFUN: (list of supported <fun>'s), (list of supported <rst>'s) OK	+CFUN: (0,1,4,6,7,8,15,16),(0-1) OK

5.3.3 TOBY-L4 / TOBY-L2 / MPCI-L2 / LARA-R2 / TOBY-R2 / SARA-U2 / LISA-U2 / LISA-U1 / SARA-G4 / SARA-G3 / LEON-G1 defined values

Parameter	Type	Description
<fun>	Number	Selected functionality: • 0: sets the MT to minimum functionality (disable both transmit and receive RF circuits by deactivating both CS and PS services) • 1 (factory-programmed value): sets the MT to full functionality, e.g. from airplane mode or minimum functionality • 4: disables both transmit and receive RF circuits by deactivating both CS and PS services and sets the MT into airplane mode. Airplane mode is persistent between power cycles triggered by +CFUN=16 or +CPWROFF (where supported) • 6: enables the SIM-toolkit interface in dedicated mode and fetching of proactive commands by SIM-APPL from the SIM-card

Parameter	Type	Description
		• 7 or 8: disables the SIM-toolkit interface and fetching of proactive commands by SIM-APPL from the SIM-card • 9: enables the SIM-toolkit interface in raw mode and fetching of proactive commands by SIM-APPL from the SIM-card • 15: MT silent reset (with detach from network and saving of NVM parameters), without reset of the SIM card • 16: MT silent reset (with detach from network and saving of NVM parameters), with reset of the SIM card • 19: sets the MT to minimum functionality by deactivating CS and PS services and the SIM card • 127: sets the MT in a deep low power state "HALT" (with detach from the network and saving of the NVM parameters); the only way to wake up the module is a power cycle or a module reset
<rst>	Number	Reset mode. This parameter can be used only when <fun> is 1, 4 or 19. • 0 (default value): do not reset the MT before setting it to the selected <fun> • 1: performs a MT silent reset (with detach from network and saving of NVM parameters) with reset of the SIM card before setting it to the selected <fun>
<power_mode>	Number	• 0: MT is switched on with minimum functionality • 1: MT is switched on • 4: MT is in "airplane mode" • 19: MT is in minimum functionality with SIM deactivated
<STK_mode>	Number	• 6: the SIM-toolkit interface in dedicated mode and fetching of proactive commands by SIM-APPL from the SIM-card are enabled • 0, 7 or 8: the SIM-toolkit interface is disabled; fetching of proactive commands by SIM-APPL from the SIM-card is enabled • 9: the SIM-toolkit interface in raw mode and fetching of proactive commands by SIM-APPL from the SIM-card are enabled

5.3.4 Notes

TOBY-L4

- <fun>=9, 127 are not supported.
- AT+CFUN=19 does not support the <rst> parameter.
- <STK_mode>=9 is not supported.
- The MT silent reset without the SIM card reset (<fun>=15) restarts the protocol stack tasks (without triggering a detach if the module is attached) while retaining the SIM status, i.e. the PIN shall not be inserted again. This mimics a silent reset and sets the module in a known initial state. Drivers and applications are not restarted, therefore if e.g audio was active, it might be negatively affected by the AT+CFUN=15 command. Additionally, most volatile parameters (e.g. URC) are lost and need to be reconfigured.

TOBY-L2 / MPCI-L2

- After enabling the STK interface in raw mode it is not possible to switch to dedicated mode (and vice versa) without performing a reset.
- <fun>=7 and 8 are not supported
- <fun>=15 restarts the protocol stack tasks (without triggering a detach if the module is attached) while retaining the SIM status, i.e. the PIN shall not be inserted again. This mimics a silent reset and sets the module in a known initial state. Drivers and applications are not restarted, therefore if e.g. a MUX port was opened, communication with it is maintained, unless the AT+CFUN=15 interrupts a pending AT command requiring interaction with the protocol stack, in which case communication on MUX channels can be negatively affected. Additionally, most non-volatile parameters are not saved, as this kind of reset does not imply a complete module restart
- <rst> parameter is ignored when entered after a <fun> not supporting reset.
- In case the application needs to interact with the SIM, the AT+CFUN=1 command must be issued after the AT+CFUN=19 command.

TOBY-L200-03A / TOBY-L200-03S / TOBY-L210-03A / TOBY-L210-03S / TOBY-L280-03A / TOBY-L280-03S / MPCI-L200-03S / MPCI-L210-03S / MPCI-L280-03S

- The AT+CFUN=15 command issued in SAP client mode (+USAPMODE: 1) will disable the remote SIM connection and restart the protocol stack on the local SIM card.

TOBY-L200-00S / TOBY-L201 / TOBY-L210-00S / TOBY-L210-60S / MPCI-L200-00S / MPCI-L201 / MPCI-L210-00S / MPCI-L210-60S

- <fun>=15 behaves as <fun>=16: the MT is reset as well as the SIM card.
- <fun>=4 is not persistent between power cycles.

LARA-R2 / TOBY-R2

- A change of module functionality via <fun>=0, 1 or 4 also triggers the reset of the UICC driver, hence can be used to refresh the SIM card status after a SIM insertion or removal.
- <fun>=19 and 127 are not supported.

SARA-U2 / LISA-U2 / LISA-U1

- <fun>=19 and 127 are not supported.
- <power_mode>=19 is not supported.
- The AT+CFUN=15 command shall not be issued in SAP client mode (+USAPMODE: 1).

SARA-G4 / SARA-G3 / LEON-G1

- <fun>=4 is not supported (<fun>=0 can be used instead).
- <fun>=9, 19 and 127 are not supported.
- <fun>=15 behaves as <fun>=16: the MT is reset as well as the SIM card.
- <rst>=1 can be used only if <fun>=1.
- <power_mode>=19 is not supported.
- <STK_mode>=9 is not supported.

5.4 Indicator control +CIND

+CIND						
Modules	All products					
Attributes	**Syntax**	**PIN required**	**Settings saved**	**Can be aborted**	**Response time**	**Error reference**
	partial	No	No	No	-	+CME Error

5.4.1 Description

Provides indication states related to network status, battery information and so on.

The set command does not allow setting the values for those indications which are set according to module state (see <descr> parameter).

The list of indications for set and read commands follows the indexes reported in the <descr> parameter, so that the first <ind> corresponds to "battchg" and so on.

For more details see the 3GPP TS 27.007 [2].

5.4.2 Syntax

Type	Syntax	Response	Example
Set	AT+CIND=[<ind>[,<ind>[,...]]]	OK	AT+CIND= OK
Read	AT+CIND?	+CIND: <ind>[,<ind>[,...]] OK	+CIND: 5,0,0,0,0,0,0,0,0,0,0,0 OK
Test	AT+CIND=?	+CIND: (list of <descr>s) OK	+CIND: ("battchg",(0-5)),("signal",(0-5)),("service",(0,1)),("sounder",(0,1)),("message",(0,1)),("call",(0,1)),("roam",(0,1)),("smsfull",(0,1)),("gprs",(0-2)),("callsetup",(0-3)),("callheld",(0,1)),("simind",(0-2)) OK

5.4.3 Defined values

Parameter	Type	Description
<ind>	Number	Range of corresponding <descr> used to identify the service when an unsolicited indication is provided
<descr>	String	Reserved by the norm and their <ind> ranges; it may have the values: • "battchg": battery charge level (0-5) • "signal": signal quality. See mapping in the note below • "service": network service availability o 0: not registered to any network o 1: registered to the network o 65535: indication not available • "sounder": sounder activity, indicating when the module is generating a sound o 0: no sound o 1: sound is generated • "message": unread message available in <mem1> storage o 0: no messages o 1: unread message available • "call": call in progress o 0: no call in progress o 1: call in progress • "roam": registration on a roaming network o 0: not in roaming or not registered o 1: roaming o 65535: indication not available • "smsfull": indication that an SMS has been rejected with the cause of SMS storage full o 0: SMS storage not full o 1: SMS storage full • "gprs": PS indication status: o 0: no PS available in the network o 1: PS available in the network but not registered o 2: registered to PS o 65535: indication not available • "callsetup": call set-up: o 0: no call set-up o 1: incoming call not accepted or rejected o 2: outgoing call in dialling state o 3: outgoing call in remote party alerting state • "callheld": call on hold: o 0: no calls on hold o 1: at least one call on hold • "simind": SIM detection o 0: no SIM detected o 1: SIM detected o 2: not available

5.4.4 Notes

- If the battery charging is not supported, "battchg" always returns 5 (full charge).
- The <descr> values cannot be changed with +CIND set.
- The following mapping of "signal" value to the power level exists:

"signal" value	Power level
0	(< -105 dBm or unknown)
1	(< -93 dBm)
2	(< -81 dBm)
3	(< -69 dBm)
4	(< -57 dBm)
5	(>= -57 dBm)

TOBY-L4

- <descr>="battchg", "signal", "service", "sounder", "message", "smsfull", "gprs", "callsetup", "callheld" are not supported.
- The value "2" for the "simind" indicator is not supported.
- The set command allows enabling (1) or disabling (0) each indicator (i.e. to enable the SIM indication issue the command AT+CIND=,,1). All indicators are by default enabled.

TOBY-L4906-50A

- All indicators are by default disabled.

TOBY-L2 / MPCI-L2

- The set command is actually a dummy command always returning the "OK" final result code.

TOBY-L200-00S / TOBY-L201-01S / TOBY-L210-00S / TOBY-L210-60S / MPCI-L200-00S / MPCI-L201-01S / MPCI-L210-00S / MPCI-L210-60S

- <descr>="simind" is not supported.
- The "callsetup", "callheld", "sounder" indications are not provided.

TOBY-L201-02S / MPCI-L201-02S

- The "callsetup", "callheld", "sounder" indications are not provided.

SARA-U2 / LISA-U2 / LISA-U1

- To enable the "SIM detection" feature the SIM_DET pin must be properly configured (if not already set); for more details see the GPIO introduction and +UGPIOC command description.

SARA-G340 / SARA-G350

- If the battery charging is not supported, "battchg" always returns 0 (full charge).
- <descr>="sounder" indication is always set to 0, hence the +CIEV: 4,x URC is never displayed.

SARA-G300 / SARA-G310 / LEON-G1

- <descr>="simind" is not supported.
- <descr>="sounder" indication is always set to 0, hence the +CIEV: 4,x URC is never displayed.

5.5 Configuration of indicator control +UCIND

+UCIND						
Modules	TOBY-L2 MPCI-L2					
	LARA-R2 TOBY-R2					
	SARA-U2 LISA-U2 LISA-U1					
Attributes	**Syntax**	**PIN required**	**Settings saved**	**Can be aborted**	**Response time**	**Error reference**
	full	No	No	No	-	+CME Error

5.5.1 Description

Allows the configuration of unsolicited results for indications with +CIEV.

5.5.2 Syntax

Type	Syntax	Response	Example
Set	AT+UCIND=[<conf>]	OK	AT+UCIND=7 OK
Read	AT+UCIND?	+UCIND: <conf> OK	+UCIND: 7 OK
Test	AT+UCIND=?	OK	

5.5.3 Defined values

Parameter	Type	Description
<conf>	Number	The unsigned integer (0 to 4095) is a bitmask representing the list of the indications active for +CIEV URC reporting. The bit position corresponds to the indicator order number (see the <descr> parameter of +CMER). The least significant bit is used for the first indicator.

Parameter	Type	Description
		The bits corresponding to unused indicator order numbers (greater than 13) must be set to 0 (setting a <conf> greater than 4095 causes an error). The default value is 40 95 (all the indications are enabled).

5.6 Mobile termination event reporting +CMER

+CMER						
Modules	All products					
Attributes	**Syntax**	**PIN required**	**Settings saved**	**Can be aborted**	**Response time**	**Error reference**
	partial	No	No	No	-	+CME Error

5.6.1 Description

Configures sending of URCs from MT to DTE for indications. The <mode> parameter controls the processing of URCs specified within this command.

The URC is generated each time an indicator which is defined in +CIND command changes status. The code is actually submitted to MT according to the +CMER settings.

The command +UCIND allows enabling or disabling indicators.

5.6.2 Syntax

Type	Syntax	Response	Example
Set	AT+CMER=[<mode>[,<keyp>[,<disp>[,<ind>[,<bfr>]]]]]	OK	AT+CMER=1,0,0,2,1 OK
Read	AT+CMER?	+CMER: <mode>,<keyp>,<disp>,<ind>,<bfr> OK	+CMER: 1,0,0,0,1 OK
Test	AT+CMER=?	+CMER: (list of supported <mode>'s),(list of supported <keyp>'s),(list of supported <disp>'s),(list of supported <ind>'s),(list of supported <bfr>'s) OK	+CMER: (0-3),(0),(0),(0-2),(0,1) OK
URC		+CIEV: <descr>,<value>	

5.6.3 Defined values

Parameter	Type	Description
<mode>	Number	• 0 (default value): buffer URCs in the MT • 1: discard URCs when the V.24 interface is reserved for data; otherwise directly display them on the DTE • 2: buffer URCs in MT when the V.24 interface is reserved and flush them after reservation; otherwise directly display them on the DTE • 3: same as 1
<keyp>	Number	• 0: no keypad event reporting
<disp>	Number	• 0: no display event reporting
<ind>	Number	• 0: no indicator event reporting • 1: indicator event reporting using the +CIEV URC. Only the indicator events which are not caused by +CIND shall be indicated by the MT to the DTE. • 2: indicator event reporting using the +CIEV URC. All the indicator events shall be directed from MT to DTE.
<bfr>	Number	• 0: MT buffer of URCs defined within this command is cleared when <mode> 1...3 is entered • 1: MT buffer of URCs defined within this command is flushed to the DTE when <mode> 1...3 is entered (the OK final result code shall be given before flushing the codes).
<descr>	Number	Indicates the indicator order number. The name in the brackets indicates the corresponding <descr> parameter of +CIND; <value> is the new value of indicator:

Parameter	Type	Description
		• 1 ("battchg"): <value> provides the battery charge level (0-5) • 2 ("signal"): <value> provides the signal quality o 0: < -105 dBm o 1: < -93 dBm o 2: < -81 dBm o 3: < -69 dBm o 4: < - 57 dBm o 5: >= -57 dBm • 3 ("service"): <value> provides the network service availability: o 0: not registered to the network o 1: registered to the network • 4 ("sounder"): <value> provides the sounder activity: o 0: no sound o 1: sound is generated • 5 ("message"): <value> provides the unread message available in <mem1> storage: o 0: no messages o 1: unread message available • 6 ("call"): <value> provides the call in progress: o 0: no call in progress o 1: call in progress • 7 ("roam"): <value> provides the registration on a roaming network: o 0: not in roaming o 1: roaming • 8 ("smsfull"): <value> provides the SMS storage status: o 0: SMS storage not full o 1: SMS Storage full (an SMS has been rejected with the cause of SMS storage full) • 9 ("gprs"): <value> provides the GPRS indication status: o 0: no GPRS available in the network o 1: GPRS available in the network but not registered o 2: registered to GPRS o 65535: PS service indication is not available • 10 ("callsetup"): <value> provides the call set-up: o 0: no call set-up o 1: incoming call not accepted or rejected o 2: outgoing call in dialing state o 3: outgoing call in remote party alerting state • 11 ("callheld"): <value> provides the call on hold: o 0: no calls on hold o 1: at least one call on hold • 12 ("simind"): <value> provides the SIM detection: o 0: no SIM detected o 1: SIM detected o 2: not available

5.6.4 Notes

TOBY-L4

- <ind>=2 is not supported.
- <descr>=1 ("battchg", battery charge level), 2 ("signal", signal quality), 3 ("service", network service availability), 4 ("sounder", sounder activity), 5 ("message", unread message available in <mem1> storage), 8 ("smsfull", SMS storage status), 9 ("gprs", GPRS indication status), 10 ("callsetup", call set-up), 11 ("callheld", the call on hold) are not supported.

LARA-R2 / TOBY-R2

- During a VOLTE call, the network might implement the alerting phase via early media with forking model. In this scenario no +CIEV: 10,3 URC will be generated and the audio will play the ringback tone provided by the network.

TOBY-L2 / MPCI-L2

- The <mode> parameter cannot be set to 2 and 3.
- The "callsetup", "callheld", "sounder" indications are not provided.

SARA-G300 / SARA-G310 / LEON-G1

- <descr>=12 ("simind", SIM detection) is not supported.

5.7 Clock +CCLK

+CCLK						
Modules	All products					
Attributes	**Syntax**	**PIN required**	**Settings saved**	**Can be aborted**	**Response time**	**Error reference**
	partial	No	NVM	No	-	+CME Error

5.7.1 Description

Sets and reads the real-time clock of the MT.

5.7.2 Syntax

Type	Syntax	Response	Example
Set	AT+CCLK=<time>	OK	AT+CCLK="14/07/01,15:00:00+01" OK
Read	AT+CCLK?	+CCLK: <time> OK	+CCLK: "14/07/01,15:00:00+01" OK
Test	AT+CCLK=?	OK	

5.7.3 Defined values

Parameter	Type	Description
<time>	String	Format is "yy/MM/dd,hh:mm:ss+TZ". Characters indicate year, month, day, hours, minutes, seconds, time zone. The factory-programmed value is "04/01/01,00:00:00+00". Values prior to the factory-programmed value are not allowed.

5.7.4 Notes

- If the parameter value is out of range, then the "+CME ERROR: operation not supported" or "+CME ERROR: 4" will be provided (depending on the +CMEE AT command setting).
- "TZ": The Time Zone information is represented by two digits. The value is updated during the registration procedure when the automatic time zone update is enabled (using +CTZU command) and the network supports the time zone information.
- The Time Zone information is expressed in steps of 15 minutes and it can assume a value in the range that goes from -96 to +96.

SARA-G340 / SARA-G350 / LEON-G1

- The PIN insertion is mandatory before the command execution.

5.8 Alarm +CALA

+CALA						
Modules	TOBY-L2 MPCI-L2					
	LARA-R2 TOBY-R2					
	SARA-U2 LISA-U2 LISA-U1					
	SARA-G4 SARA-G340 SARA-G350 SARA-G350-53S LEON-G1					
Attributes	**Syntax**	**PIN required**	**Settings saved**	**Can be aborted**	**Response time**	**Error reference**
	full	No	NVM	No	-	+CME Error

5.8.1 Description

Sets an alarm time in the MT. There can be an array of different types of alarms. If the setting fails, an error result code is returned. To set up a recurrent alarm for more days in the week, the <recurr> parameter is used. When an alarm time is reached, the alarm actions are executed:

- Sound alarm (if not silent and if the sound is supported)
- URC **+CALV: <n>** is displayed on DTE

5.8.2 Syntax

Type	Syntax	Response	Example
Set	AT+CALA=<time>[,<n>[,<type>[,<text>[,<recurr>[,<silent>]]]]]	OK	AT+CALA="02/07/01,14:56:00+04",1,1,"Alarm" OK
Read	AT+CALA?	[+CALA: <time>,<n1>,<type>,<text>,<recurr>,<silent> [+CALA: <time>,<n2>,<type>,<text>,<recurr>,<silent> [...]]] OK	+CALA: "02/07/01,14:56:00+04",1,1,"Alarm","",1 OK
Test	AT+CALA=?	+CALA: (list of supported <n>s),(list of supported <type>s),<tlength>,<rlength>,(list of supported <silent>'s) OK	+CALA: (1-3),,255,13,(0-1) OK
URC		+CALV: <n>	

5.8.3 Defined values

Parameter	Type	Description
<time>	String	Format is "yy/MM/dd,hh:mm:ss+TZ". Characters indicate year, month, day, hour, minutes, seconds, time zone.
<n>, <n1>, <n2>	Number	Indicates the index of the alarm, the range is 1-3; the default value is 1.
<type>	Number	Type of the alarm
<text>	String	Text to be displayed when the alarm time is reached.
<tlength>	Number	Maximum length of <text>; the maximum length is 255.
<recurr>	String	Maximum string length is 13, it indicates the day of week for the alarm in one of the following formats: • "<1..7>[,<1..7>[...]]": sets a recurrent alarm for one or more days in the week. The digits 1 to 7 corresponds to the days in the week, Monday (1), ..., Sunday (7). Example: the string "1,2,3,4,5" may be used to set an alarm for some weekdays. • "0": sets a recurrent alarm for all days in the week and all following weeks • when the recurrent parameter is set, the time parameter format is "hh:mm:ss +TZ" (hour, minutes, seconds, time zone)
<rlength>	Number	Indicates the maximum length of <recurr>
<silent>	Number	Indicates if the alarm is silent or not: • 0 (default value): the alarm will not be silent • 1: the alarm will be silent and the only result from the alarm is the +CALV URC

5.8.4 Notes

- The alarm is not by default configured.
- The <type> parameter is ignored.
- The <silent> parameter can only be set to 1 when sound is not supported, if the audio interface is available in the interested product version then the silent mode 0 or 1 can be set.
- The module can be switched off after setting the alarm, in which case the module switches on as soon as the alarm time is reached. The following is an example procedure using the alarm setting:
  - Set the RTC clock by AT command: AT+CCLK="06/12/29,11:00:00+00" (the time can be checked with the AT+CCLK read command)
  - Set the RTC alarm by AT command: AT+CALA="06/12/29,11:01:00+00",1,0,"","",0 (the alarm set can be checked by the AT+CALA read command)
  - Switch off the MT with AT+CPWROFF

  Output: the MT switches on as soon as the minute is expired and answers "+CALV: 1". Try to send "AT" on the hyper terminal, the MT replies properly.

TOBY-L2 / MPCI-L2

- The <n> parameter can only be set to 1.
- If <recurr> parameter is used, the <time> parameter must not contain a date (the format "hh:mm:ss+TZ" is used in this case).
- The <silent> default parameter is set to 1.
- Alarm reprogramming is possible only after deletion through +CALD command.

LARA-R2 / TOBY-R2 / SARA-U2 / LISA-U2

- The <text> parameter is ignored.

LARA-R204 / LARA-R220

- The <silent>=0 is not supported.

SARA-G340 / SARA-G350 / LEON-G1

- The <tlength> parameter is ignored.

SARA-G4

- The <tlength> parameter is ignored.
- The <silent> parameter is not supported.

5.9 Delete alarm +CALD

+CALD						
Modules	TOBY-L2 MPCI-L2					
	LARA-R2 TOBY-R2					
	SARA-U2 LISA-U2 LISA-U1					
	SARA-G4 SARA-G340 SARA-G350 SARA-G350-53S LEON-G1					
Attributes	**Syntax**	**PIN required**	**Settings saved**	**Can be aborted**	**Response time**	**Error reference**
	full	No	No	No	-	+CME Error

5.9.1 Description

Deletes an alarm in the MT.

5.9.2 Syntax

Type	Syntax	Response	Example
Set	AT+CALD=<n>	OK	AT+CALD=1 OK
Test	AT+CALD=?	+CALD: (list of <n>s) OK	+CALD: (1-3) OK

5.9.3 Defined values

Parameter	Type	Description
<n>	Number	Indicates the index of the alarm; see the +CALA command description for the allowed range of indexes.

5.9.4 Notes

SARA-G340 / SARA-G350 / LEON-G1

- The PIN insertion is mandatory before the command execution.

5.10 Alert sound mode +CALM

+CALM						
Modules	TOBY-L200-02S TOBY-L200-03A TOBY-L200-03S TOBY-L210-02S TOBY-L210-03A TOBY-L210-03S TOBY-L210-62S TOBY-L220-02S TOBY-L280					
	LARA-R202 LARA-R203 LARA-R211 LARA-R280 TOBY-R2					
	SARA-U2 LISA-U200-01S LISA-U200-02S LISA-U200-03S LISA-U200-52S LISA-U200-62S LISA-U200-83S LISA-U201 LISA-U230 LISA-U260 LISA-U270 LISA-U120 LISA-U130					
	SARA-G340 SARA-G350 SARA-G350-53S LEON-G1					
Attributes	**Syntax**	**PIN required**	**Settings saved**	**Can be aborted**	**Response time**	**Error reference**
	partial	No	NVM	No	-	+CME Error

5.10.1 Description

Selects the general alert sound mode.

5.10.2 Syntax

Type	Syntax	Response	Example
Set	AT+CALM=<mode>	OK	AT+CALM=0 OK
Read	AT+CALM?	+CALM: <mode> OK	+CALM: 0 OK
Test	AT+CALM=?	+CALM: (list of supported <mode>s) OK	+CALM: (0-1) OK

5.10.3 Defined values

Parameter	Type	Description
<mode>	Number	• 0 (factory-programmed value): normal mode • 1: silent mode (ring tones and SMS tones are muted; +UTGN AT command is not supported)

5.10.4 Notes

- If +CALM is set to 1, the +UTGN command returns an error result code (+CME ERROR: operation not supported).
- If an incorrect number of parameters is provided or the parameter value is out of range, then the error result code "+CME ERROR: operation not supported" will be provided (if +CMEE is set to 2).

TOBY-L2 / SARA-G340 / SARA-G350 / LEON-G1

- If +CALM is set to 1, the service tones (e.g.: Call Waiting tone) and alarm tone (see +CALA command) are also muted; furthermore the +UPLAYFILE and +UPAR commands return an error result code (+CME ERROR: operation not supported).

5.11 Ringer sound level +CRSL

+CRSL						
Modules	TOBY-L4 TOBY-L200-02S TOBY-L200-03A TOBY-L200-03S TOBY-L210-02S TOBY-L210-03A TOBY-L210-03S TOBY-L210-62S TOBY-L220-02S TOBY-L280					
	LARA-R202 LARA-R203 LARA-R211 LARA-R280 TOBY-R2					
	SARA-U2 LISA-U200-01S LISA-U200-02S LISA-U200-03S LISA-U200-52S LISA-U200-62S LISA-U200-83S LISA-U201 LISA-U230 LISA-U260 LISA-U270 LISA-U120 LISA-U130					
	SARA-G340 SARA-G350 SARA-G350-53S LEON-G1					
Attributes	**Syntax**	**PIN required**	**Settings saved**	**Can be aborted**	**Response time**	**Error reference**
	partial	No	NVM	No	-	+CME Error

5.11.1 Description

Selects the sound level for the ringer of an incoming call and for the tone generator (see the +UPAR command).

5.11.2 Syntax

Type	Syntax	Response	Example
Set	AT+CRSL=[<level>]	OK	AT+CRSL=2 OK
Read	AT+CRSL?	+CRSL: <level> OK	+CRSL: 2 OK
Test	AT+CRSL=?	+CRSL: (list of supported <level>s) OK	+CRSL: (0-5) OK

5.11.3 Defined values

Parameter	Type	Description
<level>	Number	Range 0-5 (0 means mute). The default value and factory-programmed value is 4 4 means -8 dB; each step corresponds to 18 levels and each level corresponds to 0.5 dB; e.g.: 5 means +1 dB

5.11.4 Notes

- If an incorrect number of parameters is provided or the parameter value is out of range, then the error result code "+CME ERROR: operation not supported" will be provided (if +CMEE is set to 2).

TOBY-L4

- The command controls the volume of the following locally generated supervisory tones: call waiting, ringing tone, subscriber busy, ringer. The tones are generated locally when the in-band tones are not available (see the +UPROGRESS AT command).

LISA-U1

- If +CRSL is set to 0, the AMR player (see the +UPLAYFILE command) is muted.

SARA-G340 / SARA-G350 / LEON-G1

- The <level> parameter is mandatory.
- If +CRSL is set to 0, the +UPLAYFILE command returns an error result code (+CME ERROR: operation not supported).
- The command also selects the volume of the MIDI player (see the +UPAR command), the AMR player (see the +UPLAYFILE command), the service tones (e.g.: Call Waiting tone) and the alarm tone (see the +CALA command).

5.12 Loudspeaker volume level +CLVL

+CLVL						
Modules	TOBY-L4 TOBY-L200-02S TOBY-L200-03A TOBY-L200-03S TOBY-L210-02S TOBY-L210-03A TOBY-L210-03S TOBY-L210-62S TOBY-L220-02S TOBY-L280					
	LARA-R202 LARA-R203 LARA-R211 LARA-R280 TOBY-R2					
	SARA-U2 LISA-U200-01S LISA-U200-02S LISA-U200-03S LISA-U200-52S LISA-U200-62S LISA-U200-83S LISA-U201 LISA-U230 LISA-U260 LISA-U270 LISA-U120 LISA-U130					
	SARA-G340 SARA-G350 SARA-G350-53S LEON-G1					
Attributes	**Syntax**	**PIN required**	**Settings saved**	**Can be aborted**	**Response time**	**Error reference**
	partial	No	NVM	No	-	+CME Error

5.12.1 Description

Selects the speech volume.

5.12.2 Syntax

Type	Syntax	Response	Example
Set	AT+CLVL=[<level>]	OK	AT+CLVL=30 OK
Read	AT+CLVL?	+CLVL: <level> OK	+CLVL: 80 OK
Test	AT+CLVL=?	+CLVL: (list of supported <level>s) OK	+CLVL: (0-100) OK

5.12.3 Defined values

Parameter	Type	Description
<level>	Number	0-100 (0 means mute). The default and factory-programmed value is 80 100 means +6 dB; the step size is 0.5 dB; e.g.: 80 means -4 dB

5.12.4 Notes

- If an incorrect number of parameters is provided or the parameter value is out of range, then the error result code "+CME ERROR: operation not supported" will be provided (if +CMEE is set to 2).
- The command affects only the speech volume during the call. Other players volume and tone generator volume are not affected.

TOBY-L2

- The allowed <level> range is 0-37, where 0 means mute, 37 means 0 dB and the step size is 1 dB (e.g.: 30 means -7 dB). The default and factory-programmed value is 30.

SARA-G340 / SARA-G350 / LEON-G1

- The <level> parameter is mandatory. Moreover <level>= 100 means 0 dB and the step size is 0.25 dB (e.g.: 80 means -5 dB).

5.13 Mute control +CMUT

+CMUT						
Modules	TOBY-L4 TOBY-L200-02S TOBY-L200-03A TOBY-L200-03S TOBY-L210-02S TOBY-L210-03A TOBY-L210-03S TOBY-L210-62S TOBY-L220-02S TOBY-L280					
	LARA-R202 LARA-R203 LARA-R211 LARA-R280 TOBY-R2					
	SARA-U2 LISA-U200-01S LISA-U200-02S LISA-U200-03S LISA-U200-52S LISA-U200-62S LISA-U200-83S LISA-U201 LISA-U230 LISA-U260 LISA-U270 LISA-U120 LISA-U130					
	SARA-G340 SARA-G350 SARA-G350-53S LEON-G1					
Attributes	**Syntax**	**PIN required**	**Settings saved**	**Can be aborted**	**Response time**	**Error reference**
	full	No	No	No	-	+CME Error

5.13.1 Description

Configures the uplink voice muting during all the voice calls.

5.13.2 Syntax

Type	Syntax	Response	Example
Set	AT+CMUT=<n>	OK	AT+CMUT=0 OK
Read	AT+CMUT?	+CMUT: <n> OK	+CMUT: 0 OK
Test	AT+CMUT=?	+CMUT: (list of supported <n>s) OK	+CMUT: (0-1) OK

5.13.3 Defined values

Parameter	Type	Description
<n>	Number	• 0 (default value): mute off • 1: mute on

5.13.4 Notes

- If an incorrect number of parameters is provided or the parameter value is out of range, then the error result code "+CME ERROR: operation not supported" will be provided (if +CMEE is set to 2).

5.14 Set greeting text +CSGT

+CSGT						
Modules	TOBY-L2 MPCI-L2					
	LARA-R2 TOBY-R2					
	SARA-U2 LISA-U2 LISA-U1					
	SARA-G4 SARA-G3 LEON-G1					
Attributes	**Syntax**	**PIN required**	**Settings saved**	**Can be aborted**	**Response time**	**Error reference**
	partial	No	NVM	No	-	+CME Error

5.14.1 Description

Configures and activates/deactivates the greeting text. The greeting text configuration's change will be applied at the subsequent boot. If active, the greeting text is shown at boot once, on any AT interface, the first time the TE sets the DTR line to ON state.

☞ Take care about restrictions related to the baud rate described in the Autobauding description.

5.14.2 Syntax

Type	Syntax	Response	Example
Set	AT+CSGT=<mode>[,<text>]	OK	AT+CSGT=1,"Hello user" OK

Type	Syntax	Response	Example
Read	AT+CSGT?	+CSGT: <text>,<mode> OK	+CSGT: "Hello",0 OK
Test	AT+CSGT=?	+CSGT: (list of supported <mode>s), <ltext> OK	+CSGT: (0-1),49 OK

5.14.3 Defined values

Parameter	Type	Description
<text>	String	Greeting text. The factory-programmed value is the empty string.
<mode>	Number	• 0: turn off the greeting text • 1: turn on the greeting text
<ltext>	Number	Maximum length of the <text> parameter.

5.14.4 Notes

LARA-R2 / TOBY-R2 / SARA-G4 / SARA-G3 / LEON-G1

- The greeting text is shown even if the DTR line is set to OFF state.

5.15 Automatic time zone update +CTZU

+CTZU						
Modules	All products					
Attributes	**Syntax**	**PIN required**	**Settings saved**	**Can be aborted**	**Response time**	**Error reference**
	full	Yes	NVM	No	-	+CME Error

5.15.1 Description

Configures the automatic time zone update via NITZ.

☞ The Time Zone information is provided after the network registration (if the network supports the time zone information).

5.15.2 Syntax

Type	Syntax	Response	Example
Set	AT+CTZU=<on_off>	OK	AT+CTZU=1 OK
Read	AT+CTZU?	+CTZU: <on_off> OK	+CTZU: 0 OK
Test	AT+CTZU=?	+CTZU: (list of supported <on_off>s) OK	+CTZU: (0-1) OK

5.15.3 Defined values

Parameter	Type	Description
<on_off>	Number	Allowed values (see Notes for the factory-programmed value): • 0: automatic time zone via NITZ disabled • 1: automatic time zone update via NITZ enabled; if the network supports the service, the local time of the module is changed (not only time zone)

5.15.4 Notes

TOBY-L4 / TOBY-L201-02S / TOBY-L210-62S / MPCI-L201-02S / LARA-R2 / TOBY-R2

- The factory-programmed value of the <on_off> parameter is 1.

TOBY-L200 / TOBY-L201-01S / TOBY-L210-00S / TOBY-L210-02S / TOBY-L210-03A / TOBY-L210-03S / TOBY-L210-60S / TOBY-L220 / TOBY-L280 / MPCI-L200 / MPCI-L201-01S / MPCI-L210 / MPCI-L220 / MPCI-L280 / SARA-U2 / LISA-U2 / LISA-U1 / SARA-G4 / SARA-G3 / LEON-G1

- The factory-programmed value of the <on_off> parameter is 0.

TOBY-L201-02S / MPCI-L201-02S

- In TOBY-L201-02S-00 and MPCI-L201-02S-00 the factory-programmed value of the <on_off> parameter is 0.

5.16 Time zone reporting +CTZR

+CTZR						
Modules	All products					
Attributes	**Syntax**	**PIN required**	**Settings saved**	**Can be aborted**	**Response time**	**Error reference**
	partial	Yes	No	No	-	+CME Error

5.16.1 Description

Configures the time zone change event reporting. If the reporting is enabled, the MT returns the **+CTZE** URC (if supported) or the **+CTZV** URC whenever the time zone changes or the **+CTZEU** URC whenever the universal time reporting is available and additionally the **+CTZDST** URC (if supported) if the daylight saving time information is available.

5.16.2 Syntax

Type	Syntax	Response	Example
Set	AT+CTZR=<onoff>	OK	AT+CTZR=1 OK
Read	AT+CTZR?	+CTZR: <onoff> OK	+CTZR: 0 OK
Test	AT+CTZR=?	+CTZR: (list of supported <onoff>s) OK	+CTZR: (0-1) OK
URC		+CTZV: <tz>[,<time>]	+CTZV: +04,"12/12/31,23:46:33"
URC		+CTZE: <tz>,<dst>[,<time>]	+CTZE: +04,1,"12/12/31,23:46:33"
URC		+CTZEU: <tz>,<dst>[,<utime>]	+CTZEU: +04,1
URC		+CTZDST: <dst>	+CTZDST: 1

5.16.3 Defined values

Parameter	Type	Description
<onoff>	Number	• 0 (default value): disable the time zone change event reporting • 1: enable the time zone reporting by +CTZV and +CTZDST URCs • 2: enable the time zone reporting by +CTZE URC • 3: enable the time zone reporting and universal time reporting by +CTZEU URC
<tz>	Number	Indicates the time zone. The range goes from -48 to +56.
<time>	String	Current local time in format "yy/MM/dd,hh:mm:ss". The characters indicate year, month, day, hour, minutes, seconds.
<dst>	Number	Indicates the daylight saving time. The allowed values are: • 0: no adjustments • 1: +1 hour adjustment • 2: +2 hours adjustment
<utime>	String	Universal time in format "yyyy/MM/dd,hh:mm:ss". The characters indicate year, month, day, hour, minutes, seconds.

5.16.4 Notes

- The time zone reporting is not affected by the automatic time zone setting command +CTZU.
- The time zone information is expressed in steps of 15 minutes.

- The reported <tz> reflects the <dst> offset: if time zone is +1 hour and the daylight saving time is +1 hour, the reported <tz> is +08.

TOBY-L4 / TOBY-L2 / MPCI-L2 / LARA-R2 / TOBY-R2 / SARA-U2 / LISA-U2 / LISA-U1 / SARA-G4 / SARA-G3 / LEON-G1

- <onoff>=3 and +CTZEU URC are not supported.

TOBY-L2 / MPCI-L2

- +CTZDST URC is not supported.

TOBY-L4 / LARA-R2 / TOBY-R2 / SARA-U2 / LISA-U2 / LISA-U1

- <onoff>=2 and +CTZE URC are not supported.

SARA-G4 / SARA-G3 / LEON-G1

- The <time> parameter is not supported.
- <onoff>=2, +CTZE and +CTZDST +URC are not supported.

5.17 List current calls +CLCC

+CLCC						
Modules	TOBY-L4 TOBY-L200 TOBY-L201 TOBY-L210 TOBY-L220-02S TOBY-L280 MPCI-L200 MPCI-L201 MPCI-L210 MPCI-L220-02S MPCI-L280					
	LARA-R202 LARA-R203 LARA-R211 LARA-R280 TOBY-R2					
	SARA-U2 LISA-U2 LISA-U1					
	SARA-G3 LEON-G1					
Attributes	**Syntax**	**PIN required**	**Settings saved**	**Can be aborted**	**Response time**	**Error reference**
	full	Yes	No	No	-	+CME Error

5.17.1 Description

Returns the list of current calls of MT. If no calls are available, no information text response is sent.

5.17.2 Syntax

Type	Syntax	Response	Example
Action	AT+CLCC	[+CLCC: <id1>,<dir>,<stat>,<mode>,<mpty>[,<number>,<type>[,alpha>[,<priority>[,<CLI_validity>]]]] [+CLCC: <id2>,<dir>,<stat>,<mode>,<mpty>[,<number>,<type>[,<alpha>[,<priority>[,<CLI_validity>]]]] [...]]] OK or OK (if no calls)	+CLCC: 1,0,0,0,0,"0913137880",129 OK
Test	AT+CLCC=?	OK	

5.17.3 Defined values

Parameter	Type	Description
<idx>	Number	Indicates the call identification (see +CHLD x)
<dir>	Number	Direction: • 0: mobile originated (MO) call • 1: mobile terminated (MT) call
<stat>	Number	State of the call: • 0: active • 1: held • 2: dialling (Mobile Originated call) • 3: alerting (Mobile Originated cal)

Parameter	Type	Description
		• 4: incoming (Mobile Terminated call) • 5: waiting (Mobile Terminated call)
<mode>	Number	Teleservice: • 0: voice • 1: data • 2: FAX • 9: unknown
<mpty>	Number	• 0: call is not one of multiparty (conference) call parties • 1: call is one of multiparty call parties
<number>	String	Indicates the phone number in format specified by <type>
<type>	Number	Type of address octet (phone number)
<alpha>	String	Optional string alphanumeric representation of <number> corresponding to the entry found in phonebook; this parameter is not managed
<priority>	Number	Indicates the eMLPP priority level of the call, values specified in 3GPP TS 22.067 [59].
<CLI_validity>	Number	Provide details why <number> does not contain a calling party BCD number (see the 3GPP TS 24.008 [12] subclause 10.5.4.30). The parameter is not present for MO call types: • 0: CLI valid • 1: CLI has been withheld by the originator (see the 3GPP TS 24.008 [12] table 10 .5.135a/3GPP TS 24.008 code "Reject by user") • 2: CLI is not available due to interworking problems or limitations of originating network (see the 3GPP TS 24.008 [12] table 10.5.135a/3GPP TS 24.008 code "Interaction with other service") • 3: CLI is not available due to calling party being of type payphone (see the 3GPP TS 24.008 [12] table 10.5.135a/3GPP TS 24.008 code "Coin line/payphone") • 4: CLI is not available due to other reasons (see the 3GPP TS 24.008 [12] table 10 .5.135a/3GPP TS 24.008 code "Unavailable") When the CLI is not available (<CLI_validity>=2, <CLI_validity>=3 or <CLI_validity>= 4), the <number> parameter shall be an empty string ("") and <type> value will not be significant. Nevertheless, the MT may return the recommended value 128 for <type> (TON/NPI unknown in accordance with 3GPP TS 24.008 [12] subclause 10 .5.4.7). When the CLI has been withheld by the originator, (<CLI_validity>=1) and the CLIP is provisioned with the "override category" option (see the 3GPP TS 22.081 [34] and 3GPP TS 23.081 [35]), <number> and <type> is provided. Otherwise, the MT shall return the same setting for <number> and <type> as if the CLI was not available

5.17.4 Notes

SARA-U2 / LISA-U2 / LISA-U1 / SARA-G3 / LEON-G1

- The <priority> and <CLI_validity> parameters are not supported.

5.18 IMS single radio voice call continuity +CISRVCC

+CISRVCC						
Modules	LARA-R202 LARA-R211 TOBY-R2					
Attributes	**Syntax**	**PIN required**	**Settings saved**	**Can be aborted**	**Response time**	**Error reference**
	full	No	NVM	No	-	+CME Error

5.18.1 Description

Informs the MT about the SRVCC support. MT normally updates the network when changing this parameter. The SRVCC provides the ability to have a seamless handover of a voice call between the PS domain and the CS domain for calls that are anchored in IMS, when the UE is capable of transmitting/receiving on only one of those access networks (PS or CS) at a given time, see 3GPP TS 23.221 [90] subclause 7.2a, annex A.1 and annex A.2

5.18.2 Syntax

Type	Syntax	Response	Example
Set	AT+CISRVCC=[<uesrvcc>]	OK	AT+CISRVCC=0 OK

Type	Syntax	Response	Example
Read	AT+CISRVCC?	+CISRVCC: <uesrvcc> OK	+CISRVCC: 1 OK
Test	AT+CISRVCC=?	+CISRVCC: (list of supported <uesrvcc>s) OK	+CISRVCC: (0,1) OK

5.18.3 Defined values

Parameter	Type	Description
<uesrvcc>	Number	SRVCC support status. Allowed values: • 0 (default value): SRVCC not supported • 1: SRVCC supported

5.18.4 Notes

LARA-R2 / TOBY-R2

- The factory-programmed value is 1.

5.19 Report mobile termination error +CME

+CME						
Modules	All products					
Attributes	**Syntax**	**PIN required**	**Settings saved**	**Can be aborted**	**Response time**	**Error reference**
	full	No	No	No	-	+CME Error

5.19.1 Description

Configures the formatting of the result code +CME ERROR: <err> as an indication of an error relating to the functionality of the MT. When enabled, MT related errors cause +CME ERROR: <err> final result code instead of the regular ERROR final result code. The error result code is returned normally when an error is related to syntax, invalid parameters or MT functionality.

5.19.2 Syntax

Type	Syntax	Response	Example
Set	AT+CMEE=[<n>]	OK	AT+CMEE=2 OK
Read	AT+CMEE?	+CMEE: <n> OK	+CMEE: 0 OK
Test	AT+CMEE=?	+CMEE: (list of supported <n>s) OK	+CMEE: (0-2) OK

5.19.3 Defined values

Parameter	Type	Description
<n>	Number	• 0: +CME ERROR: <err> result code disabled and ERROR used • 1: +CME ERROR: <err> result code enabled and numeric <err> values used • 2: +CME ERROR: <err> result code enabled and verbose <err> values used

5.19.4 Notes

- The following convention is valid:

Numeric error code	Verbose error code	Description
3	"operation not allowed"	The MT is in a state which does not allow performing the entered command.
4	"operation not supported"	The error result code is related to a parameter not covered by the GSM/ETSI or u-blox specification

5.20 Extended error report +CEER

+CEER						
Modules	All products					
Attributes	**Syntax**	**PIN required**	**Settings saved**	**Can be aborted**	**Response time**	**Error reference**
	partial	No	No	No	-	+CME Error

5.20.1 Description

Causes the MT to return one or more lines of the information text response which offer an extended report of the reason for:

- the failure in the last unsuccessful call setup or in-call modification,
- the last call release,
- the last unsuccessful GPRS attach / EPS bearer establishment or unsuccessful PDP context activation,
- the last GPRS / EPS bearer detach or PDP context deactivation.

The total number of characters in the information text response shall not exceed 2041 characters (including line terminators). The textual report is the failure cause according with 3GPP TS 24.008 [12].

☞ SARA-G4 / SARA-G3
The command also provides an extended report about the reason for the last SM STATUS message sent to the network. When <type>="SM STATUS msg sent" is reported, it is suggested to reset the PS data connection.

5.20.2 Syntax

Type	Syntax	Response	Example
Action	AT+CEER	+CEER: <type>[,<cause>,<error_description>] OK	+CEER: "CC setup error",277,"SIM status failure" OK
Test	AT+CEER=?	OK	

5.20.3 Defined values

Parameter	Type	Description
<type>	String	• "CC setup error": <cause> and <error_description> parameters are provided • "CC modification error": <cause> and <error_description> parameters are provided • "CC release": <cause> and <error_description> parameters are provided • "SM attach error": <cause> and <error_description> parameters are provided • "SM detach": <cause> and <error_description> parameters are provided • "SM activation error": <cause> and <error_description> parameters are provided • "SM deactivation": <cause> and <error_description> parameters are provided • "SS network GSM cause": <SS_cause_errors> parameters are provided • "SS network reject cause": <tag> and <SS_cause> parameters are provided • "EMM cause": <cause> and <error_description> parameters are provided • "ESM attach error": <cause> and <error_description> parameters are provided • "ESM detach": <cause> and <error_description> parameters are provided • "IMS USSD Network cause": <cause> parameter is provided • "No report available": no more parameters are provided ☞ SARA-G3 An additional report type is supported: "SM STATUS msg sent". The <cause> and <error_description> parameters indicate respectively the SM cause (see 3GPP TS 24.008 [12]) and the time, based on +CCLK?, when the message was sent to the network
<cause>	Number	Code number of the received error (internal or network originated); more details in Appendix A.3
<error_description>	String	Code description of the received error; more details in Appendix A.3

5.20.4 Notes

TOBY-L200-00S / TOBY-L200-02S / TOBY-L201-01S / TOBY-L210-00S / TOBY-L210-02S / TOBY-L210-60S / TOBY-L210-62S / TOBY-L220 / TOBY-L280-02S / MPCI-L200 / MPCI-L201-01S / MPCI-L210 / MPCI-L220 / MPCI-L280

- <type>="EMM cause", "ESM attach error", "ESM detach" and "IMS USSD Network cause" are not supported.

TOBY-L200-03S / TOBY-L201-02S / TOBY-L210-03A / TOBY-L210-03S / TOBY-L280-03S / MPCI-L201-02S

- <type>="ESM attach error", "ESM detach" and "IMS USSD Network cause" are not supported.
- <type>="EMM cause" is not supported by TOBY-L200-03S-00, TOBY-L201-02S-00, TOBY-L210-03S-00, TOBY-L210-03A-00, TOBY-L280-03S-00, MPCI-L201-02S-00.

LARA-R2 / TOBY-R2 / SARA-U2 / LISA-U2 / LISA-U1

- <type>="EMM cause", "ESM attach error", "ESM detach" and "IMS USSD Network cause" are not supported.

SARA-G3

- If no mapping for <cause> is available, the <error_description> response is "Unknown".

SARA-G300 / SARA-G310 / SARA-G340-00S / SARA-G340-01S / SARA-G350-00S / SARA-G350-00X / SARA-G350-01B / SARA-G350-01S

- <type>="SM STATUS msg sent" is not supported.

SARA-G4

- If no mapping for <cause> is available, the <error_description> response is "Unknown".
- <type>="CC modification error", "SM attach error", "SM detach", "SM activation error", "SM deactivation", "SS network GSM cause", "SS network reject cause", "EMM cause", "ESM attach error", "ESM detach", "IMS USSD Network cause" are not supported.

LEON-G1

- <type> parameter is not supported while <cause> and <error_description> parameters are mandatory in the response to the action command.
- If no mapping for <cause> is available, the <error_description> response is "Unknown".

5.21 Proprietary extended error report +UCEER

+UCEER						
Modules	LISA-U200-00S LISA-U1					
Attributes	**Syntax**	**PIN required**	**Settings saved**	**Can be aborted**	**Response time**	**Error reference**
	partial	No	No	No	-	+CEER Error

5.21.1 Description

Causes the MT to return one or more lines of information text (<report>, <cause>) determined by the MT providing an extended report of the reason of:

- The failure in the last unsuccessful call set-up or in-call modification
- The last call release
- The last unsuccessful GPRS attach or unsuccessful PDP context activation
- The last GPRS detach or PDP context deactivation

5.21.2 Syntax

Type	Syntax	Response	Example
Action	AT+UCEER	+UCEER: <report>,<cause> OK	+UCEER: 1,1 OK
Test	AT+UCEER=?	OK	

5.21.3 Defined values

Parameter	Type	Description
<report>	Number	Numeric error result code
<cause>	Number	Indicates the error result code as previously displayed with the response +CME ERROR on DTE corresponding to the <report>

6 Call control

6.1 Select type of address +CSTA

+CSTA						
Modules	TOBY-L4 TOBY-L200 TOBY-L201 TOBY-L210 TOBY-L220-02S TOBY-L280 MPCI-L200 MPCI-L201 MPCI-L210 MPCI-L220-02S MPCI-L280					
	LARA-R202 LARA-R203 LARA-R211 LARA-R280 TOBY-R2					
	SARA-U2 LISA-U2 LISA-U1					
	SARA-G3 LEON-G1					
Attributes	**Syntax**	**PIN required**	**Settings saved**	**Can be aborted**	**Response time**	**Error reference**
	full	No	No	No	-	+CME Error

6.1.1 Description

Selects the type of number for further dialling commands (D) according to 3GPP specifications.

☞ The type of address is automatically detected from the dialling string thus the +CSTA command has no effect.

☞ TOBY-L2
The type of address is not automatically detected on voice capable devices.

6.1.2 Syntax

Type	Syntax	Response	Example
Set	AT+CSTA=[<type>]	OK	AT+CSTA=145 OK
Read	AT+CSTA?	+CSTA: <type> OK	+CSTA: 145 OK
Test	AT+CSTA=?	+CSTA: (list of supported <type>s) OK	+CSTA: (129,145) OK

6.1.3 Defined values

Parameter	Type	Description
<type>	Number	Type of address in integer format • 145: dialing string includes international access code character '+' • 129 (default value): national coded dialing string

6.2 Dial command D

D						
Modules	TOBY-L4 TOBY-L200 TOBY-L201 TOBY-L210 TOBY-L220-02S TOBY-L220-02S TOBY-L280 MPCI-L200 MPCI-L201 MPCI-L210 MPCI-L220-02S MPCI-L280					
	LARA-R2 TOBY-R2					
	SARA-U2 LISA-U2 LISA-U1					
	SARA-G3 LEON-G1					
Attributes	**Syntax**	**PIN required**	**Settings saved**	**Can be aborted**	**Response time**	**Error reference**
	full	Yes	No	Yes	Up to 3 min	+CME Error

6.2.1 Description

Lists characters that may be used in a dialling string for making a call (voice, data or fax call) or controlling supplementary services in accordance with 3GPP TS 22.030 [5] and initiates the indicated kind of call. No further commands may follow in the command line in case of data or fax calls.

☞ TOBY-L4/TOBY-L2/MPCI-L2/LARA-R2/TOBY-R2/SARA-U2/LISA-U2/LISA-U1/SARA-G4/SARA-G3/LEON-G1
If the semicolon ';' is given after the dial string, a voice call is originated, regardless of the value set via +FCLASS command; otherwise the kind of call depends on the service class previously selected via +FCLASS command.

☞ TOBY-L4/TOBY-L2/MPCI-L2/LARA-R2/TOBY-R2/SARA-U2/LISA-U2/LISA-U1/SARA-G4/SARA-G3/LEON-G1
"ATD1;" is used to call the Voice Mail number. The number is stored in the SIM card (in EF_{CPHS} or EF_{MBDN}) but the presence of both files is not mandatory. The command returns an error result code if the number cannot be retrieved but also if the Voice Mail number has been disabled (see +CSVM for further details).

☞ TOBY-L200-03A / TOBY-L200-03S / TOBY-L210-03A / TOBY-L210-03S / TOBY-L280-03A / TOBY-L280-03S / LARA-R2 / TOBY-R2
The '+' character in the middle of the <number> parameter is used as separator between the called party number and the called party subaddress. The subaddress is a sequence of bytes in hexadecimal format and is structured as the subaddress information element defined in 3GPP TS 24.008 [12]. The Called party Subaddress IEI (first byte of the called party subaddress information element) is added by the PS. The maximum size of the subaddress is 22.

6.2.2 Syntax

Type	Syntax	Response	Example
Action	ATD<number>[<I>][<G>][;]	See Result codes	**Voice call** ATD123456; OK
			Data / fax call ATD123456 CONNECT 9600
			Supplementary services ATD*#43# +CCWA: 0,1 +CCWA: 0,2 OK

6.2.3 Defined values

Parameter	Type	Description
<number>	Number	Dial string; the allowed characters are: 1 2 3 4 5 6 7 8 9 0 * # + A B C D , T P ! W @ (see the 3GPP TS 27.007 [2]). The following characters are ignored: , T ! W @. • TOBY-L2/MPCI-L2 - The character D is ignored when present in the dial number (it is valid only for the DTMF string). • LARA-R2/TOBY-R2/SARA-U2/LISA-U2/LISA-U1/SARA-G4/SARA-G3/LEON-G1 - The character A is interpreted as P due to the BCD extended coding (see the 3GPP TS 31.102 [19] and 3GPP TS 24.008 [12]). • LARA-R2/TOBY-R2/SARA-U2/LISA-U2/LISA-U1/SARA-G4/SARA-G3/LEON-G1 - The character D is ignored due to the BCD extended coding (see the 3GPP TS 31.102 [19] and 3GPP TS 24.008 [12]). ☞ The first occurrence of P is interpreted as pause and separator between the dialling number and the DTMF string. The following occurrences are interpreted only as pause. The use of P as pause has been introduced for AT&T certification.
<I>	String	Set the CLI status; the allowed values are: • I (ASCII code 49 Hex): CLI presentation restricted • i: CLI presentation allowed ☞ The CLIR supplementary service subscription is overridden for this call.
<G>	String	Configures the CUG supplementary service for the specific call: • G: CUG activated • g: CUG deactivated The index and the information parameters used during the call will be the same previously set with +CCUG command.

6.2.4 Notes

TOBY-L2 / MPCI-L2

- The maximum number of characters accepted by the dial command is 40.

TOBY-L200-03S / TOBY-L210-03A / TOBY-L210-03S / TOBY-L280-03S

- The maximum number of characters accepted by the dial command is 86.
- The subaddress feature is not supported by TOBY-L200-03S-00, TOBY-L210-03A-00, TOBY-L210-03S-00, TOBY-L280-03S-00, therefore the number of characters accepted for these products is 40.

TOBY-L4 / LARA-R2 / TOBY-R2 / SARA-U2 / LISA-U2 / LISA-U1 / SARA-G3

- The maximum number of characters accepted by the dial command is 81.

LEON-G1

- The syntax ATD is allowed. It is only used for service TS61 (alternate speech and G3 FAX) to trigger an in-call modification.
- The maximum number of characters accepted by the dial command is 63.

6.2.5 Voice call example

The following diagram illustrates the possible transitions in both Mobile Terminated and Mobile Originated calls. Information text responses and result codes generated by MT are in italic.

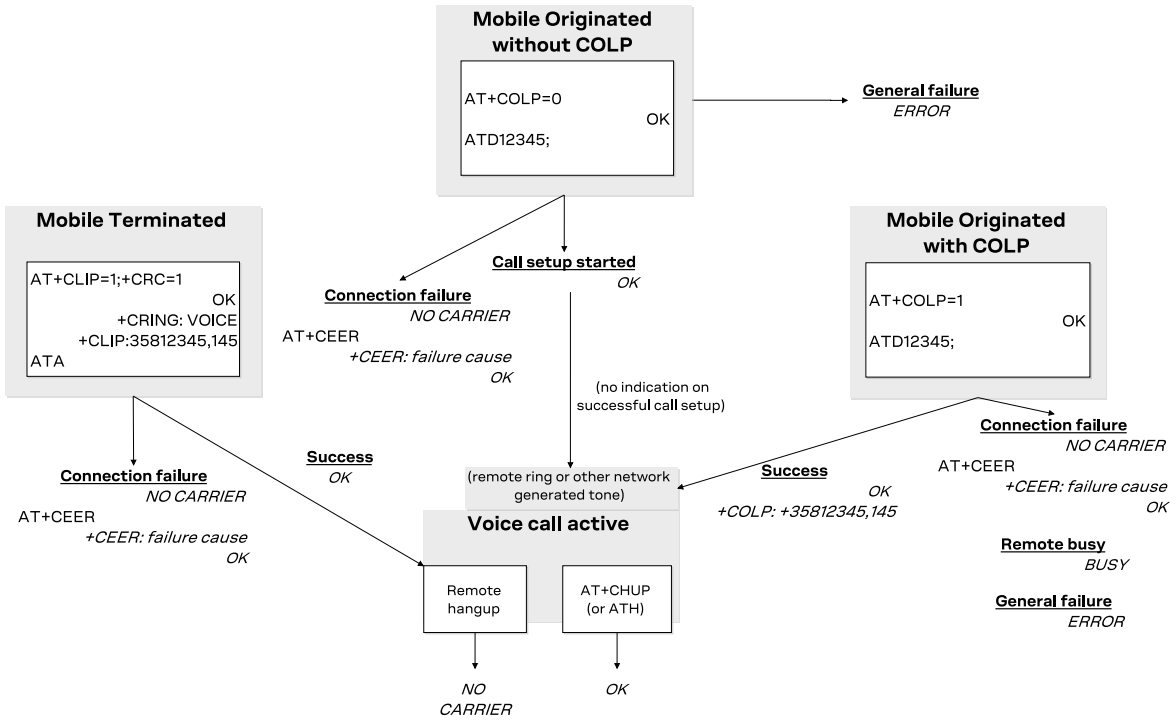

Figure 1: Mobile Terminated and Mobile Originated calls possible transitions

6.3 Direct calling from phonebooks D>

D>						
Modules	LARA-R2 TOBY-R2					
	SARA-U2 LISA-U2 LISA-U1					
	SARA-G340 SARA-G350 SARA-G350-53S LEON-G1					
Attributes	**Syntax**	**PIN required**	**Settings saved**	**Can be aborted**	**Response time**	**Error reference**
	full	No	No	No	Up to 3 min	+CME Error

6.3.1 Description

Allows voice, data or fax calls, selecting the phone number from the phonebook.

☞ If the semicolon ';' is given after the phone number, a voice call is originated, regardless of the value set via +FCLASS command; otherwise the kind of call depends on the service class previously selected via See +FCLASS command.

6.3.2 Syntax

Type	Syntax	Response	Example
Action	ATD><str>[I][G][;]	See Result codes	ATD>"u-blox"; OK
	ATD><mem><n>[I][G][;]	See Result codes	ATD>SM1; OK
	ATD><n>[I][G][;]	See Result codes	ATD>1; OK

6.3.3 Defined values

Parameter	Type	Description
<str>	String	D><str>[I][G][;] originates a call to phone number with corresponding alphanumeric field in the phonebook (set via +CPBS command) is <str>.
<mem><n>	String	D><mem><n>[I][G][;] originates a call to phone number in memory (one of the phonebooks) <mem> entry location <n>; see the +CPBS command for <mem> value. ☞ <mem> value must be inserted without quotation marks (")
<n>	String	D><n>[I][G][;] originate a call to phone number in entry location <n> of the phonebook (set via +CPBS command).
[I][G][;]	String	See the D

6.4 Select tone dialling T

T						
Modules	TOBY-L200-02S TOBY-L200-03A TOBY-L200-03S TOBY-L210-02S TOBY-L210-03A TOBY-L210-03S TOBY-L210-62S TOBY-L220-02S TOBY-L280 MPCI-L200-02S MPCI-L200-03S MPCI-L210-02S MPCI-L210-03S MPCI-L220-02S MPCI-L280					
	LARA-R2 TOBY-R2					
	SARA-U2 LISA-U2 LISA-U1					
	SARA-G340 SARA-G350 SARA-G350-53S LEON-G1					
Attributes	**Syntax**	**PIN required**	**Settings saved**	**Can be aborted**	**Response time**	**Error reference**
	full	No	No	No	-	+CME Error

6.4.1 Description

Causes subsequent (or previous) D command to assume that DTMF dialling is to be used. Since DTMF dialling is default in GSM, this command has no effect.

6.4.2 Syntax

Type	Syntax	Response	Example
Action	ATT	OK	

6.5 Select pulse dialling P

P						
Modules	TOBY-L4 TOBY-L200-02S TOBY-L200-03A TOBY-L200-03S TOBY-L210-02S TOBY-L210-03A TOBY-L210-03S TOBY-L210-62S TOBY-L220-02S TOBY-L280 MPCI-L200-02S MPCI-L200-03S MPCI-L210-02S MPCI-L210-03S MPCI-L220-02S MPCI-L280					
	LARA-R2 TOBY-R2					
	SARA-U2 LISA-U2 LISA-U1					
	SARA-G340 SARA-G350 SARA-G350-53S LEON-G1					
Attributes	**Syntax**	**PIN required**	**Settings saved**	**Can be aborted**	**Response time**	**Error reference**
	full	No	No	No	-	+CME Error

6.5.1 Description

Causes subsequent (or previous) D command to assume that pulse dialling is to be used. Since DTMF dialling is default in GSM, this command has no effect.

6.5.2 Syntax

Type	Syntax	Response	Example
Action	ATP	OK	

6.6 Call answer A

A						
Modules	TOBY-L4 TOBY-L200 TOBY-L201 TOBY-L210 TOBY-L220-02S TOBY-L280 MPCI-L200 MPCI-L201 MPCI-L210 MPCI-L220-02S MPCI-L280					
	LARA-R2 TOBY-R2					
	SARA-U2 LISA-U2 LISA-U1					
	SARA-G3 LEON-G1					
Attributes	**Syntax**	**PIN required**	**Settings saved**	**Can be aborted**	**Response time**	**Error reference**
	full	No	No	No	< 20 s	+CME Error

6.6.1 Description

Instructs the DCE to immediately connect to the line and start the answer sequence as specified for the underlying DCE. Any additional command that appears after A on the same command line is ignored. The command is abortable.

☞ TOBY-L4/TOBY-L2/MPCI-L2/LARA-R2/TOBY-R2/SARA-U2/LISA-U2/LISA-U1/SARA-G4/SARA-G3/LEON-G1
The user is informed that an incoming call is waiting, by the RING IRC or +CRING: <type> (see the +CRLP AT command description) displayed on MT.

6.6.2 Syntax

Type	Syntax	Response	Example
Action	ATA	RING OK	

6.7 Hook control H

H						
Modules	TOBY-L4 TOBY-L200 TOBY-L201 TOBY-L210 TOBY-L220-02S TOBY-L280 MPCI-L200 MPCI-L201 MPCI-L210 MPCI-L220-02S MPCI-L280					
	LARA-R2 TOBY-R2					
	SARA-U2 LISA-U2 LISA-U1					
	SARA-G3 LEON-G1					
Attributes	**Syntax**	**PIN required**	**Settings saved**	**Can be aborted**	**Response time**	**Error reference**
	full	No	No	No	< 20 s	-

6.7.1 Description

Disconnects the remote user. In case of multiple calls, all the active calls and held calls are released while the waiting calls are not.

☞ In case of dual service calls, the command will switch the call from data (if different from fax) to voice.

☞ If the module has a PDP context activated and is in On-Line Command Mode (OLCM), the command deactivates the context. During the PSD OLCM an incoming CS call can be accepted with an ATA command. Subsequent ATH command releases the current CS call while leaving the PDP context activated. In this state a second ATH command also deactivates the PDP context.

6.7.2 Syntax

Type	Syntax	Response	Example
Action	ATH	OK	

6.7.3 Notes

LISA-U2 / LISA-U1

- A CS data call cannot be established during PSD OLCM (CS voice call only where is supported).

SARA-G340 / SARA-G350 / LEON-G1

- In case of multiple calls, all the active calls are released while the waiting and held calls are not.

6.8 Monitor speaker loudness L

L						
Modules	TOBY-L4 TOBY-L200-02S TOBY-L200-03A TOBY-L200-03S TOBY-L210-02S TOBY-L210-03A TOBY-L210-03S TOBY-L210-62S TOBY-L220 TOBY-L280 MPCI-L200-02S MPCI-L200-03S MPCI-L210-02S MPCI-L210-03S MPCI-L220 MPCI-L280					
	LARA-R2 TOBY-R2					
	SARA-U2 LISA-U2 LISA-U1					
	SARA-G340 SARA-G350 SARA-G350-53S LEON-G1					
Attributes	**Syntax**	**PIN required**	**Settings saved**	**Can be aborted**	**Response time**	**Error reference**
	full	No	No	No	-	+CME Error

6.8.1 Description

This command has no effect. It is implemented for compatibility with ITU-T V.25ter recommendation [21].

6.8.2 Syntax

Type	Syntax	Response	Example
Action	ATL[<value>]	OK	ATL0 OK

6.8.3 Defined values

Parameter	Type	Description
<value>	Number	0-3

6.9 Monitor speaker mode M

M						
Modules	TOBY-L4 TOBY-L200-02S TOBY-L200-03A TOBY-L200-03S TOBY-L210-02S TOBY-L210-03A TOBY-L210-03S TOBY-L210-62S TOBY-L220 TOBY-L280 MPCI-L200-02S MPCI-L200-03S MPCI-L210-02S MPCI-L210-03S MPCI-L220 MPCI-L280					
	LARA-R2 TOBY-R2					
	SARA-U2 LISA-U2 LISA-U1					
	SARA-G340 SARA-G350 SARA-G350-53S LEON-G1					
Attributes	**Syntax**	**PIN required**	**Settings saved**	**Can be aborted**	**Response time**	**Error reference**
	full	No	No	No	-	+CME Error

6.9.1 Description

This command has no effect. It is implemented for compatibility with ITU-T V.25ter recommendation [21].

6.9.2 Syntax

Type	Syntax	Response	Example
Action	ATM<value>	OK	ATM0 OK

6.9.3 Defined values

Parameter	Type	Description
<value>	Number	0-2

6.10 Call mode +CMOD

+CMOD						
Modules	TOBY-L4 TOBY-L200 TOBY-L201 TOBY-L210 TOBY-L220-02S TOBY-L280 MPCI-L200 MPCI-L201 MPCI-L210 MPCI-L220-02S MPCI-L280					
	LARA-R2 TOBY-R2					
	SARA-U2 LISA-U2 LISA-U1					
	SARA-G3 LEON-G1					
Attributes	**Syntax**	**PIN required**	**Settings saved**	**Can be aborted**	**Response time**	**Error reference**
	full	No	No	No	-	+CME Error

6.10.1 Description

Selects the call mode of further dialing commands (D) or for next answering command (A).

6.10.2 Syntax

Type	Syntax	Response	Example
Set	AT+CMOD=<mode>	OK	AT+CMOD=0 OK
Read	AT+CMOD?	+CMOD: <mode> OK	+CMOD: 0 OK
Test	AT+CMOD=?	+CMOD: (list of supported <mode>s) OK	+CMOD: (0-1) OK

6.10.3 Defined values

Parameter	Type	Description
<mode>	Number	• 0: single mode • 1: TS61 (voice alternating with fax) (TS means Tele Service)

6.10.4 Notes

- <mode>=1 is only available on modules where the fax is available.

TOBY-L200-00S / TOBY-L201 / TOBY-L210-00S / MPCI-L200-00S / MPCI-L201 / MPCI-L210-00S

- The set command returns an error result code and the test command result code only returns "OK".

6.11 Hang up call +CHUP

+CHUP						
Modules	TOBY-L4 TOBY-L200 TOBY-L201 TOBY-L210 TOBY-L220-02S TOBY-L280 MPCI-L200 MPCI-L201 MPCI-L210 MPCI-L220-02S MPCI-L280					
	LARA-R2 TOBY-R2					
	SARA-U2 LISA-U2 LISA-U1					
	SARA-G3 LEON-G1					
Attributes	**Syntax**	**PIN required**	**Settings saved**	**Can be aborted**	**Response time**	**Error reference**
	full	No	No	No	< 20 s	+CME Error

6.11.1 Description

Causes the MT to hang up the current GSM or UMTS call.

☞ In case of multiple calls, all active calls will be released, while waiting and held calls are not.

☞ The command does not replace the ITU-T V.250 [20] command H, but gives an assured procedure to terminate an alternating mode call. For further information see the 3GPP TS 27.007 [2].

6.11.2 Syntax

Type	Syntax	Response	Example
Action	AT+CHUP	OK	AT+CHUP OK
Test	AT+CHUP=?	OK	AT+CHUP=? OK

6.12 Single numbering scheme +CSNS

+CSNS						
Modules	TOBY-L4					
	LARA-R202 LARA-R203 LARA-R211 LARA-R280 TOBY-R2					
	SARA-U2 LISA-U2 LISA-U1					
	SARA-G3 LEON-G1					
Attributes	**Syntax**	**PIN required**	**Settings saved**	**Can be aborted**	**Response time**	**Error reference**
	partial	No	Profile	No	-	+CME Error

6.12.1 Description

Selects the bearer service to be used when a mobile terminated single numbering scheme call is established, i.e. when a call without bearer capability information element is received. See the 3GPP TS 23.972 [62]. Parameter values set with +CBST command shall be used when <mode> equals to a data service.

The behavior of this command depends on the network service.

The test command returns values supported as compound values.

☞ Before setting +CSNS to 4 (data), the bearer capability to be sent to the network must be defined with AT+CBST command (e.g. AT+CBST=0,0,1).

6.12.2 Syntax

Type	Syntax	Response	Example
Set	AT+CSNS=<mode>	OK	AT+CSNS=0

Type	Syntax	Response	Example
			OK
Read	AT+CSNS?	+CSNS: <mode> OK	+CSNS: 0 OK
Test	AT+CSNS=?	+CSNS: (list of supported <mode>s) OK	+CSNS: (0,4) OK

6.12.3 Defined values

Parameter	Type	Description
<mode>	Number	• 0 (factory-programmed value): voice • 2: fax (TS 62; TS means Tele Service) • 4: data

6.12.4 Notes

- <mode>=0 is only supported by modules where the voice is available.
- <mode>=2 is only supported by modules where the fax is available.

LISA-U200-00S / LISA-U200-01S / LISA-U200-02S / LISA-U200-52S / LISA-U200-62S / LISA-U230 / LISA-U260 / LISA-U270 / LISA-U1

- The command setting is not stored in the Profile.

SARA-G300 / SARA-G310 / SARA-G340-00S / SARA-G340-01S / SARA-G350-00S / SARA-G350-00X / SARA-G350-01B / SARA-G350-01S / LEON-G1

- The command setting is not stored in the Profile.

6.13 Set reporting call status +UCALLSTAT

+UCALLSTAT						
Modules	TOBY-L4 TOBY-L200-02S TOBY-L200-03A TOBY-L200-03S TOBY-L210-02S TOBY-L210-03A TOBY-L210-03S TOBY-L210-62S TOBY-L220-02S TOBY-L280 MPCI-L200 MPCI-L210 MPCI-L220-02S MPCI-L280					
	LARA-R202 LARA-R203 LARA-R211 LARA-R280 TOBY-R2					
	SARA-U2 LISA-U2 LISA-U1					
	SARA-G3 LEON-G1					
Attributes	Syntax	PIN required	Settings saved	Can be aborted	Response time	Error reference
	full	No	No	No	-	+CME Error

6.13.1 Description

Allows to enable / disable the reporting voice or data call status on the DTE using the URC **+UCALLSTAT**. This URC is generated each time a call status change occurs. When multiple calls change status at the same time (e.g. when all multiparty calls are terminated) a URC +UCALLSTAT is generated for each of them.

6.13.2 Syntax

Type	Syntax	Response	Example
Set	AT+UCALLSTAT=<enable>	OK	AT+UCALLSTAT=1 OK
Read	AT+UCALLSTAT?	+UCALLSTAT: <enable> OK	+UCALLSTAT: 1 OK
Test	AT+UCALLSTAT=?	+UCALLSTAT: (list of supported <enable>'s) OK	+UCALLSTAT: (0-1) OK
URC		+UCALLSTAT: <call_id>,<stat>	+UCALLSTAT: 1,2

6.13.3 Defined values

Parameter	Type	Description
<enable>	Number	• 0: reporting disabled • 1: reporting enabled
<call_id>	Number	Indicates the call identification (see the 3GPP TS 22.030 [5])
<stat>	Number	Indicates the call status: • 0: active • 1: hold • 2: dialling (Mobile Originated call) • 3: alerting (Mobile Originated call; ringing for the remote party) • 4: ringing (Mobile Terminated call) • 5: waiting (Mobile Terminated call) • 6: disconnected • 7: connected (indicates the completion of a call setup first time for MT and MO calls - this is reported in addition to state active)

6.13.4 Notes

- The URC is displayed on the terminal where the command has been issued.
- For the USB terminals, the <enable> flag is reset when the USB cable is disconnected.

LARA-R2 / TOBY-R2

- During a VOLTE call, the network might implement the alerting phase via early media with forking model. In this scenario no +UCALLSTAT: 1,3 URC will be generated and the audio will play the ringback tone provided by the network.

LARA-R202 / LARA-R211 / TOBY-R2

- In case of a IMS call redirected to CS plane the +UCALLSTAT URC will show the intermediate disconnection.

6.14 Information to in-band-tones availability +UPROGRESS

+UPROGRESS						
Modules	TOBY-L4 TOBY-L200-02S TOBY-L200-03A TOBY-L200-03S TOBY-L210-02S TOBY-L210-03A TOBY-L210-03S TOBY-L210-62S TOBY-L220-02S TOBY-L280 MPCI-L200-02S MPCI-L200-03S MPCI-L210-02S MPCI-L210-03S MPCI-L220-02S MPCI-L280					
	LARA-R202 LARA-R203 LARA-R211 LARA-R280 TOBY-R2					
	SARA-U2 LISA-U2 LISA-U1					
Attributes	**Syntax**	**PIN required**	**Settings saved**	**Can be aborted**	**Response time**	**Error reference**
	full	No	No	No	-	+CME Error

6.14.1 Description

Configures the display of URC **+UPROGRESS: <cin>,<status>** on the DTE while a speech call is in progress.

6.14.2 Syntax

Type	Syntax	Response	Example
Set	AT+UPROGRESS=<mode>	OK	AT+UPROGRESS=1 OK
Read	AT+UPROGRESS?	+UPROGRESS: <mode> OK	+UPROGRESS: 1 OK
Test	AT+UPROGRESS=?	+UPROGRESS: (list of the supported <mode>s) OK	+UPROGRESS: (0,1) OK
URC		+UPROGRESS: <cin>,<status>	+UPROGRESS: 1,7

6.14.3 Defined values

Parameter	Type	Description
<mode>	Number	Enabling the +UPROGRESS URC. Allowed values: • 0: disable the +UPROGRESS URC • 1: enable the +UPROGRESS URC
<cin>	String	Call number indication
<status>	Number	Indicates the call progress status. Allowed values: • 0: no progress • 1: alerting, in-band tones or TCH (traffic channel) not yet available • 2: mobile terminated call now accepted, TCH available • 3: in-band tones available • 4: in-band tones not available • 5: TCH now available, mobile terminated call accepted • 6: TCH now available, in-band tones available • 7: TCH now available, in-band tones not available • 8: TCH changed from data to speech • 9: TCH changed from speech to data • 10: TCH changed to signalling or data • 11: the last speech call has been terminated and the speech can be disabled. Mute uplink, downlink and disable speech • 12: fast connection is available • 13: fast connection is closed • 14: progress information element playing announcement has been received

6.14.4 Notes

TOBY-L2 / MPCI-L2

- <status>=5, 6, 7, 8, 9 and 10 (CSD calls with alternate voice-data BS not supported) are not supported.

LARA-R202 / LARA-R203 / LARA-R211 / LARA-R280

- Call progress status depends on 2G/3G Call Control signalling messages, therefore not all values apply to VoLTE calls, e.g. when a dedicated EPS bearer for VoLTE calls is available, <status> 7 is usually issued.
- In case of a IMS call redirected to CS plane the +UPROGRESS URC will show the intermediate disconnection.

6.15 Tone duration +VTD

+VTD						
Modules	TOBY-L4 TOBY-L200-02S TOBY-L200-03A TOBY-L200-03S TOBY-L210-02S TOBY-L210-03A TOBY-L210-03S TOBY-L210-62S TOBY-L220-02S TOBY-L280 MPCI-L200-02S MPCI-L200-03S MPCI-L210-02S MPCI-L210-03S MPCI-L220-02S MPCI-L280					
	LARA-R202 LARA-R203 LARA-R211 LARA-R280 TOBY-R2					
	SARA-U2 LISA-U200-01S LISA-U200-02S LISA-U200-03S LISA-U200-52S LISA-U200-62S LISA-U200-83S LISA-U201 LISA-U230 LISA-U260 LISA-U270 LISA-U120 LISA-U130					
	SARA-G340 SARA-G350 SARA-G350-53S LEON-G1					
Attributes	**Syntax**	**PIN required**	**Settings saved**	**Can be aborted**	**Response time**	**Error reference**
	full	No	No	No	-	+CME Error

6.15.1 Description

Refers to an integer <n> that defines the length of DTMF tones emitted as a result of the +VTS command.

For details on the effective tone duration in GSM, UMTS and VoLTE see +VTS AT command.

6.15.2 Syntax

Type	Syntax	Response	Example
Set	AT+VTD=[<n>]	OK	AT+VTD=2 OK
Read	AT+VTD?	+VTD: <n>	+VTD: 1

Type	Syntax	Response	Example
		OK	OK
Test	AT+VTD=?	+VTD: (list of supported <n>s) OK	+VTD: (0-255) OK

6.15.3 Defined values

Parameter	Type	Description
<n>	Number	Range is from 0 to 255. The default value is 1. A value different than zero causes a tone of duration <n>/10 seconds (<n> * 0.1 s). If the value 0 is selected, the tone duration is set to the default value.

6.16 DTMF and tone generation +VTS

+VTS						
Modules	TOBY-L4 TOBY-L200-02S TOBY-L200-03A TOBY-L200-03S TOBY-L210-02S TOBY-L210-03A TOBY-L210-03S TOBY-L210-62S TOBY-L220-02S TOBY-L280 MPCI-L200-02S MPCI-L200-03S MPCI-L210-02S MPCI-L210-03S MPCI-L220-02S MPCI-L280					
	LARA-R202 LARA-R203 LARA-R211 LARA-R280 TOBY-R2					
	SARA-U2 LISA-U200-01S LISA-U200-02S LISA-U200-03S LISA-U200-52S LISA-U200-62S LISA-U200-83S LISA-U201 LISA-U230 LISA-U260 LISA-U270 LISA-U120 LISA-U130					
	SARA-G340 SARA-G350 SARA-G350-53S LEON-G1					
Attributes	**Syntax**	**PIN required**	**Settings saved**	**Can be aborted**	**Response time**	**Error reference**
	full	Yes	No	Yes	Up to 7 min	+CME Error

6.16.1 Description

Allows the transmission of DTMF tones. These tones may be used e.g. when announcing the start of a recording period. The command can only be used during an active voice call. The command can be aborted if a character is sent to DCE during the command execution; this behavior is not covered by the 3GPP specification.

In GSM and UMTS the tone duration is network dependent; hence the value set with +VTS command is only the desired duration and, in particular for short tone durations, it is not guaranteed. Also the actual maximum DTMF tone duration is network dependent, i.e. the receiver can experience a shorter tone duration than the one specified with +VTS (or with +VTD). For more information see the 3GPP TS 23.014 [79]

In VoLTE DTMF tone generation is based on RTP events according to RFC 4733 [143].

6.16.2 Syntax

Type	Syntax	Response	Example
Set	AT+VTS=<DTMF>[,<duration>]	OK	AT+VTS=2 OK
			AT+VTS=2A,10 OK
Test	AT+VTS=?	+VTS: (list of <DTMF>s),(list of supported <duration>s) OK	+VTS: (0-9,#,*,A-D),(0-255) OK

6.16.3 Defined values

Parameter	Type	Description
<DTMF>	Character	String (without quotation marks) of ASCII characters from the set 0-9, #, *, A-D.
<duration>	Number	Range 0-255, expressed in <duration>/100 seconds (0.01 s). If left out or set to 0, the tone duration is given by the +VTD setting

6.16.4 Notes

- If the command is invoked when not in a call, an error result code is reported ("+CME ERROR: no connection to phone" if +CMEE=2 is set to 2).

TOBY-L210-62S

- In case of single DTMF tone the <duration> parameter must be set to 11 or above as per SBM requirement.
- In case of multiple DTMF tones the <duration> parameter must be in range [11,38]; the gap time between each tone is set to 215 ms as per SBM requirement.
- It is not possible to concatenate more +VTS AT commands (an error result code is provided in that case).

LARA-R202 / LARA-R203 / LARA-R211 / TOBY-R2

- In VoLTE the minimum supported value for the <duration> parameter is 7.

6.17 Start and stop tone generation +UVTS

+UVTS						
Modules	TOBY-L4 TOBY-L200-02S TOBY-L200-03A TOBY-L200-03S TOBY-L210-02S TOBY-L210-03A TOBY-L210-03S TOBY-L210-62S TOBY-L220-02S TOBY-L280 MPCI-L200-02S MPCI-L200-03S MPCI-L210-02S MPCI-L210-03S MPCI-L220-02S MPCI-L280					
	LARA-R202 LARA-R203 LARA-R211 LARA-R280 TOBY-R2					
	SARA-U2 LISA-U2 LISA-U120 LISA-U130					
Attributes	**Syntax**	**PIN required**	**Settings saved**	**Can be aborted**	**Response time**	**Error reference**
	full	No	No	No	-	+CME Error

6.17.1 Description

Starts and stops the DTMF tones. It can be used during speech calls and is not operative during CSD calls. For more information see the 3GPP TS 23.014 [79].

☞ When the <DTMF> parameter is omitted the tone is stopped.

6.17.2 Syntax

Type	Syntax	Response	Example
Set	AT+UVTS=[<DTMF>]	OK	AT+UVTS=2 OK
Test	AT+UVTS=?	+UVTS: (list of supported <DTMF>s) OK	+UVTS: (0-9,#,*,A-D) OK

6.17.3 Defined values

Parameter	Type	Description
<DTMF>	Char	Single ASCII character in the set 0-9, #, *, A-D

6.17.4 Notes

- If the command is invoked when not in a call, an error result code is reported ("+CME ERROR: no connection to phone" if +CMEE is set to 2).

TOBY-L2 / MPCI-L2

- A tone started with AT+UVTS shall always be explicitly stopped with AT+UVTS=, otherwise subsequent DTMF tone generations triggered via +UVTS or +VTS commands are not allowed.

6.18 Redial last telephone number DL

DL						
Modules	LARA-R2 TOBY-R2					
	SARA-U2 LISA-U2 LISA-U1					
	SARA-G340 SARA-G350 SARA-G350-53S LEON-G1					
Attributes	**Syntax**	**PIN required**	**Settings saved**	**Can be aborted**	**Response time**	**Error reference**
	full	Yes	No	No	Up to 3 min	+CME Error

6.18.1 Description

Redials the last number used in the ATD command. The command redials the last called number as a data call, while the ATDL; command redials the last called number as a voice call, regardless of whether the number was previously dialled as data or voice call. The last called number is stored locally in volatile memory.

6.18.2 Syntax

Type	Syntax	Response	Example
Action	ATDL[;]	See Result codes	ATDL OK

6.18.3 Notes

SARA-G340 / SARA-G350 / LEON-G1

- Both "ATDL" and "ATDL;" commands redial the last called number as voice call, regardless if the number was previously dialled as data or voice call. The last called number is stored in the SIM card's last-dialling phonebook.

6.19 Automatic answer S0

S0						
Modules	All products					
Attributes	**Syntax**	**PIN required**	**Settings saved**	**Can be aborted**	**Response time**	**Error reference**
	partial	No	Profile	No	-	+CME Error

6.19.1 Description

Controls the automatic answering feature of the DCE. If set to 0, the automatic answering is disabled, otherwise it causes the DCE to answer when the incoming call indication (RING) has occurred the number of times indicated by the value.

☞ For an incoming CSD call, if the autoanswering is enabled and the <value> parameter of &D command is set to 2, the autoanswering only works if the DTR line of the AT interface with activated autoanswering is set to ON. Otherwise, if DTR is OFF, then the call is rejected. If the <value> parameter of &D command is not set to 2, the DTR state has no impact on autoanswering.

6.19.2 Syntax

Type	Syntax	Response	Example
Set	ATS0=<value>	OK	ATS0=2 OK
Read	ATS0?	<value> OK	000 OK

6.19.3 Defined values

Parameter	Type	Description
<value>	Number	Value in the range 0-255; the answer to the read command is in "xxx" format. • 0 (factory-programmed value): disables automatic answer mode • 1-255: enables automatic answering after specified number of rings

6.19.4 Notes

TOBY-L4906-50A

- The command setting is stored in the NVM.

TOBY-L210-62S

- The voice call autoanswering is not supported and the command is therefore not effective.

SARA-U201-04A / SARA-U201-04B / SARA-U201-04X / SARA-U270-04B

- On the AUX UART interface, the CSD call autoanswering is not supported.

SARA-G4 / SARA-G3 / LEON-G1

- The <value> parameter is not mandatory, the default value is 0.

SARA-G340-02S / SARA-G340-02X / SARA-G350-02A / SARA-G350-02S / SARA-G350-02X

- On the AUX UART interface, the CSD call autoanswering is not supported.

6.20 Set voice mail number +CSVM

+CSVM						
Modules	TOBY-L4 TOBY-L200-02S TOBY-L200-03A TOBY-L200-03S TOBY-L210-02S TOBY-L210-03A TOBY-L210-03S TOBY-L210-62S TOBY-L220-02S TOBY-L280 MPCI-L200-02S MPCI-L200-03S MPCI-L210-02S MPCI-L210-03S MPCI-L220-02S MPCI-L280					
	LARA-R202 LARA-R203 LARA-R204 LARA-R211 LARA-R280 TOBY-R2					
	SARA-U2 LISA-U2 LISA-U1					
Attributes	**Syntax**	**PIN required**	**Settings saved**	**Can be aborted**	**Response time**	**Error reference**
	full	Yes	No	No	< 20 s	+CME Error

6.20.1 Description

Sets the phone number of the voice mail server.

☞ If the parameter <mode> is set to 0, the remaining parameters are ignored.

☞ The voice number is stored in EF_{CPHS} or EF_{MBDN}. Their presence on the SIM card is not mandatory. If neither are present, then the set and read command returns an error result code.

☞ To call the voice mail number (if possible), use the ATD1; command.

6.20.2 Syntax

Type	Syntax	Response	Example
Set	AT+CSVM=<mode>[,<number>[,<type>]]	OK	AT+CSVM=1,"+1234567890",145 OK
Read	AT+CSVM?	+CSVM: <mode>,<number>,<type> OK	+CSVM: 0,"+1234567890",145 OK
Test	AT+CSVM=?	+CSVM: (list of supported <mode>s),(list of supported <type>s) OK	+CSVM: (0-1),(128-255) OK

6.20.3 Defined values

Parameter	Type	Description
<mode>	Number	• 0: voice mail number disabled • 1: voice mail number enabled
<number>	String	Phone number; see the D command description
<type>	Number	Type of address, octet in number format • 145: <number> string includes '+' • 129: otherwise

6.20.4 Notes

- The <number> and <type> parameters can be left out if the parameter <mode> is set to 0.

6.21 Emergency call reporting configuration +UEMC

+UEMC						
Modules	TOBY-L4					
	LARA-R202 LARA-R203 LARA-R211 LARA-R280 TOBY-R2					
	SARA-U201 SARA-U260-03S SARA-U270-03A SARA-U270-03S SARA-U270-04B SARA-U270-53S SARA-U270-73S SARA-U280-03S LISA-U200-03S LISA-U200-83S LISA-U201					
Attributes	Syntax	PIN required	Settings saved	Can be aborted	Response time	Error reference
	full	No	No	No	-	+CME Error

6.21.1 Description

Enables / disables the +UUEMC URC that reports the presence of an emergency call.

6.21.2 Syntax

Type	Syntax	Response	Example
Set	AT+UEMC=<mode>	OK	AT+UEMC=0 OK
Read	AT+UEMC?	+UEMC: <mode> OK	+UEMC: 0 OK
Test	AT+UEMC=?	+UEMC: (list of supported <mode>s) OK	+UEMC: (0,1) OK
URC		+UUEMC: <state>	+UUEMC: 1

6.21.3 Defined values

Parameter	Type	Description
<mode>	Number	• 0: +UUEMC URC reporting disabled • 1: +UUEMC URC reporting enabled
<state>	Number	• 0: emergency call ended • 1: emergency call ongoing

6.22 Emergency number verification +UEMN

+UEMN						
Modules	TOBY-L4					
	LARA-R2 TOBY-R2					
	SARA-U201 SARA-U260-03S SARA-U270-03A SARA-U270-03S SARA-U270-04B SARA-U270-53S SARA-U270-73S SARA-U280-03S LISA-U200-03S LISA-U200-83S LISA-U201					
Attributes	Syntax	PIN required	Settings saved	Can be aborted	Response time	Error reference
	full	No	No	No	-	+CME Error

6.22.1 Description

Verifies if the given <number> is recognized as an Emergency Call Code (ECC).

6.22.2 Syntax

Type	Syntax	Response	Example
Set	AT+UEMN=<number>	+UEMN: <number>,<result> OK	AT+UEMN="911" +UEMN: "911",1 OK
Test	AT+UEMN=?	OK	OK

6.22.3 Defined values

Parameter	Type	Description
<number>	String	Number to be verified
<result>	Number	• 0: <number> is not recognized as an ECC • 1: <number> is recognized as an ECC

7 Network service

7.1 Subscriber number +CNUM

+CNUM						
Modules	TOBY-L4 TOBY-L2 MPCI-L2					
	LARA-R2 TOBY-R2					
	SARA-U2 LISA-U2 LISA-U1					
	SARA-G4 SARA-G340 SARA-G350 SARA-G350-53S LEON-G1					
Attributes	**Syntax**	**PIN required**	**Settings saved**	**Can be aborted**	**Response time**	**Error reference**
	full	Yes	No	No	< 10 s	+CME Error

7.1.1 Description

Returns the MSISDNs related to this subscriber. If the subscriber has different MSISDN for different services, each MSISDN is returned in a separate line.

☞ MSISDN is read from the SIM.

7.1.2 Syntax

Type	Syntax	Response	Example
Action	AT+CNUM	+CNUM: [<alpha1>],<number1>,<type1>	+CNUM: "Mario Rossi","+39320 821708",145
		[+CNUM: [<alpha2>],<number2>,<type2>	+CNUM: "ABCD . AAA","1234567890 12",129
		[...]]	OK
		OK	
		or	
		OK	
Test	AT+CNUM=?	OK	

7.1.3 Defined values

Parameter	Type	Description
<alphax>	String	Associated with <numberx>
<numberx>	String	Phone number of format specified by <typex>
<typex>	Number	Type of address, octet in Number format (145 when <numberx> string includes '+', otherwise 129)

7.1.4 Notes

TOBY-L4 / TOBY-L2 / MPCI-L2 / LARA-R2 / TOBY-R2 / SARA-U2 / LISA-U2 / LISA-U1 / SARA-G4 / SARA-G3 / LEON-G1

- The character set of the <alphax> parameter is selected by means of +CSCS AT command.

7.2 Signal quality +CSQ

+CSQ						
Modules	All products					
Attributes	**Syntax**	**PIN required**	**Settings saved**	**Can be aborted**	**Response time**	**Error reference**
	full	No	No	No	-	+CME Error

7.2.1 Description

Returns the radio signal strength <signal_power> and <qual> from the MT.

☞ TOBY-L4 / LARA-R2 / TOBY-R2
The +CSQ utilization is deprecated. It is warmly recommended to use the command +CESQ to obtain the same information more accurately.

☞ TOBY-L4 / TOBY-L2 / MPCI-L2 / LARA-R2 / TOBY-R2 / SARA-U2 / LISA-U2 / LISA-U1 / SARA-G4 / SARA-G3 / LEON-G1
The radio signal strength <signal_power> will be also used to build and display the indicator "signal" i.e. signal quality in the information text response of +CIND and in the +CIEV URC (see the +CMER command description).

In dedicated mode, during the radio channel reconfiguration (e.g. handover), invalid measurements may be returned for a short transitory because the MT must compute them on the newly assigned channel.

7.2.2 Syntax

Type	Syntax	Response	Example
Action	AT+CSQ	+CSQ: <signal_power>,<qual> OK	+CSQ: 2,5 OK
Test	AT+CSQ=?	+CSQ: (list of supported <signal_power>s),(list of supported <qual>s) OK	+CSQ: (0-31,99),(0-7,99) OK

7.2.3 Defined values

Parameter	Type	Description
<signal_power>	Number	The allowed range is 0-31 and 99. Remapped indication of the following parameters: • the Received Signal Strength Indication (RSSI) in GSM RAT • the Received Signal Code Power (RSCP) in UMTS RAT • the Reference Signal Received Power (RSRP) in LTE RAT When the RF power level of the received signal is the highest possible, the value 31 is reported. When it is not known, not detectable or currently not available, 99 is returned.
<qual>	Number	The allowed range is 0-7 and 99. The information provided depends on the selected RAT: • In 2G RAT CS dedicated and GPRS packet transfer mode indicates the Bit Error Rate (BER) as specified in 3GPP TS 45.008 [148] • In 2G RAT EGPRS packet transfer mode indicates the Mean Bit Error Probability (BEP) of a radio block. 3GPP TS 45.008 [148] specifies the range 0-31 for the Mean BEP which is mapped to the range 0-7 of <qual> • In UMTS RAT indicates the Energy per Chip/Noise (ECN0) ratio in dB levels of the current cell. 3GPP TS 25.133 [106] specifies the range 0-49 for EcN0 which is mapped to the range 0-7 of <qual> • In LTE RAT indicates the Reference Signal Received Quality (RSRQ). TS 36.133 [105] specifies the range 0-34 for RSRQ which is mapped to the range 0-7 of <qual> See Table 3 for the complete parameter mapping

7.2.4 Notes

<qual>	2G RAT CS and GPRS	2G RAT EGPRS	UMTS RAT	LTE RAT
0	BER < 0.2%	28 <= MEAN_BEP <= 31	ECN0_LEV >= 44	RSRQ_LEV < 5
1	0.2% < BER < 0.4%	24 <= MEAN_BEP <= 27	38 <= ECNO_LEV < 44	5 <= RSRQ_LEV < 10
2	0.4% < BER < 0.8%	20 <= MEAN_BEP <= 23	32 <= ECNO_LEV < 38	10 <= RSRQ_LEV < 14
3	0.8% < BER < 1.6%	16 <= MEAN_BEP <= 19	26 <= ECNO_LEV < 32	14 <= RSRQ_LEV < 18
4	1.6% < BER < 3.2%	12 <= MEAN_BEP <= 15	20 <= ECNO_LEV < 26	18 <= RSRQ_LEV < 22
5	3.2% < BER < 6.4%	8 <= MEAN_BEP <= 11	14 <= ECNO_LEV < 20	22 <= RSRQ_LEV < 26
6	6.4% < BER < 12.8%	4 <= MEAN_BEP <= 7	8 <= ECNO_LEV < 14	26 <= RSRQ_LEV < 30
7	BER > 12.8%	0 <= MEAN_BEP <= 3	ECNO_LEV < 8	RSRQ _LEV >= 30
99	Not known or not detectable			

Table 3: <qual> parameter mapping for each supported RAT

TOBY-L2 / MPCI-L2

- When the module enters the Out Of Service condition, the latest valid <signal_power> level is reported.
- The command can be used with no need of SIM insertion, because the module always try to camp on a suitable cell at boot, unless it is started in minimum functionality or it is deregistered from network (+COPS: 2).
- In UMTS RAT, the <signal_power> returned by the command is the RSCP, that is proportional to RSSI according to the following relationship:

  ```
  RSSI (dBm) = RSCP (dBm) - EC_NO (dB)
  ```

  Table 4 maps several <signal_power> values and RSSI when the corresponding P-CPICH is equal to -2 dB. Other values can be interpolated based on this.

<signal_power>	RSSI of the network
31	-46 dBm <= RSSI of the network <= -25 dBm
30	-50.5 dBm
27	-55.5 dBm
24	-60.5 dBm
22	-65.5 dBm
19	-70.5 dBm
17	-75.5 dBm
14	-80.5 dBm
12	-85.5 dBm
10	-90.5 dBm
7	-95.5 dBm
4	-100.5 dBm
2	-105.5 dBm
0	RSSI of the network <= -110.5 dBm

Table 4: Mapping between <signal_power> reported from UE and the RSSI when the P-CPICH= -2 dB

- In LTE RAT, the <signal_power> returned by the command is the RSSI. Table 5 maps several <signal_power> values reported from UE and the RSSI transmitted by the network. Other values can be interpolated based on this.

<signal_power>	RSSI of the network
31	-48.5 dBm <= RSSI of the network
30	-53.5 dBm
28	-58.5 dBm
24	-63.5 dBm
22	-68.5 dBm
19	-73.5 dBm
16	-78.5 dBm
14	-83.5 dBm
12	-88.5 dBm
10	-93.5 dBm
8	-98.5 dBm
Packet data connection lost	RSSI of the network <= -99.5 dBm

Table 5: Mapping between <signal_power> reported from UE and the RSSI transmitted by the network

SARA-U260-00S / SARA-U270-00S / SARA-U270-00X / SARA-U280-00S / LISA-U200-00S / LISA-U200-01S / LISA-U200-02S / LISA-U200-52S / LISA-U200-62S / LISA-U230 / LISA-U260 / LISA-U270 / LISA-U1

- The <qual> parameter is not updated in GPRS and EGPRS packet transfer mode.

SARA-G300 / SARA-G310 / SARA-G340-00S / SARA-G340-01S / SARA-G350-00S / SARA-G350-00X / SARA-G350-01B / SARA-G350-01S

- The <qual> parameter is not updated in GPRS packet transfer mode.

LEON-G100-07S / LEON-G100-08S

- The <signal_power> and the <qual> parameters are updated in GPRS packet transfer mode.
- If CS4 is used in GPRS packet transfer mode, the module is allowed to report <qual>=7.

LEON-G100-06S

- The <qual> parameter is not updated in GPRS packet transfer mode.

7.3 Extended signal quality +CESQ

+CESQ						
Modules	TOBY-L4 TOBY-L2 MPCI-L2					
	LARA-R2 TOBY-R2					
Attributes	**Syntax**	**PIN required**	**Settings saved**	**Can be aborted**	**Response time**	**Error reference**
	full	No	No	No	-	+CME Error

7.3.1 Description

Returns the received signal quality and level:

- If the current serving cell is not a GERAN cell, the <rxlev> and <ber> parameters are set to value 99
- If the current serving cell is not a UTRA FDD cell, the <rscp> and the <ecn0> parameters are set to 255
- If the current serving cell is not an E-UTRA cell, the <rsrq> and <rsrp> parameters are set to 255.

☞ The Reference Signal Received Power (RSRP) is a LTE specific measure that averages the power received on the subcarriers carrying the reference signal. The RSRP measurement bandwidth is equivalent to a single LTE subcarrier: its value is therefore much lower than the total received power usually referred to as RSSI. In LTE the RSSI depends on the currently allocated bandwidth, which is not pre-determined. Therefore the RSSI is not useful to describe the signal level in the cell.

7.3.2 Syntax

Type	Syntax	Response	Example
Action	AT+CESQ	+CESQ: <rxlev>,<ber>,<rscp>,<ecn0>,<rsrq>,<rsrp> OK	+CESQ: 99,99,255,255,20,80 OK
Test	AT+CESQ=?	+CESQ: (list of supported <rxlev>s),(list of supported <ber>s),(list of supported <rscp>s),(list of supported <ecn0>s),(list of supported <rsrq>s),(list of supported <rsrp>s) OK	+CESQ: (0-63,99),(0-7,99),(0-96,255),(0-49,255),(0-34,255),(0-97,255) OK

7.3.3 Defined values

Parameter	Type	Description
<rxlev>	Number	Received Signal Strength Indication (RSSI): • 0: less than -110 dBm • 1..62: from -110 to -49 dBm with 1 dBm steps • 63: -48 dBm or greater • 99: not known or not detectable
<ber>	Number	Bit Error Rate (BER): • 0..7: as the RXQUAL values described in GSM TS 05.08 [28] • 99: not known or not detectable
<rscp>	Number	Received Signal Code Power (RSCP): • 0: -121 dBm or less • 1..95: from -120 dBm to -24 dBm with 1 dBm steps • 96: -25 dBm or greater • 255: not known or not detectable
<ecn0>	Number	Ratio of received energy per PN chip to the total received power spectral density (see 3GPP TS 25.133 [106] subclause): • 0: less than -24 dB • 1..48: from -24 dB to -0.5 dBm with 0.5 dB steps (i.e. 1: -24 dB <= Ec/Io < -23.5 dB) • 49: 0 dB or greater • 255: not known or not detectable

Parameter	Type	Description
<rsrq>	Number	Reference Signal Received Quality (RSRQ): • 0: -19 dB or less • 1..33: from -19.5 dB to -3.5 dB with 0.5 dB steps • 34: -3 dB or greater • 255: not known or not detectable
<rsrp>	Number	Reference Signal Received Power (RSRP): • 0: -141 dBm or less • 1..96: from -140 dBm to -45 dBm with 1 dBm steps • 97: -44 dBm or greater • 255: not known or not detectable

7.3.4 Notes

TOBY-L2 / MPCI-L2

- When the module enters the Out Of Service condition, the lowest level of the <rxlev>, <ber>, <rscp>, <ecn0> parameters is reported.
- The command can be used with no need of the SIM insertion, because the module always try to camp on a suitable cell at the module boot, unless it is started in minimum functionality or it is deregistered from network (+COPS: 2).

LARA-R2 / TOBY-R2

- When the module is not registered (i.e. it enters the Out Of Service condition), all the parameters values are reset to 'not known or not detectable'.

7.4 Operator selection +COPS

+COPS						
Modules	All products					
Attributes	**Syntax**	**PIN required**	**Settings saved**	**Can be aborted**	**Response time**	**Error reference**
	partial	No	Profile	Yes	Up to 3 min	+CME Error

7.4.1 TOBY-L4 / TOBY-L2 / MPCI-L2 / LARA-R2 / TOBY-R2 / SARA-U2 / LISA-U2 / LISA-U1 / SARA-G4 / SARA-G3 / LEON-G1 Description

Forces an attempt to select and register with the GSM/UMTS/LTE network operator, that can be chosen in the list of network operators returned by the test command, that triggers a PLMN scan on all supported bands. Through <mode> parameter the network selection can automatically be performed or forced by this command: the access technology is indicated in <AcT> parameter (where supported).

☞ TOBY-L2 / MPCI-L2
In manual PLMN selection mode, if the optional <AcT> parameter is not specified, the modules will select GSM if available and fall back to LTE or UMTS in priority order.

☞ TOBY-L4 / LARA-R2 / TOBY-R2 / SARA-U2 / LISA-U2 / LISA-U1 / SARA-G4 / SARA-G3 / LEON-G1
In manual PLMN selection mode, if the optional <AcT> parameter is not specified, the modules will select the default access technology with the following priority order: LTE, UMTS and GSM (not supported technologies will be ignored).

☞ SARA-G4
The command cannot be aborted.

☞ u-blox cellular modules are certified according to all the capabilities and options stated in the Protocol Implementation Conformance Statement document (PICS) of the module. The PICS, according to 3GPP TS 51.010-2 [84], 3GPP TS 34.121-2 [85], 3GPP TS 36.521-2 [115] and 3GPP TS 36.523-2 [116], is a statement of the implemented and supported capabilities and options of a device. If the user changes the command settings during the certification process, the PICS of the application device integrating a u-blox cellular module must be changed accordingly.

To be able to exploit all command functionalities, the SIM card verification is required. The command is accessible also without an inserted SIM. In this case the command AT+COPS=0 always returns an error result code because the network registration cannot be performed without the SIM, while the configuration (i.e.

automatic registration) is correctly set. The set value can be checked with the command AT+COPS? or by verifying the active profile with AT&V command if supported (parameter <format> is then also visible).

The set command handling depends on the <mode> parameter value:

- **<mode>=0 and <mode>=1**: the AT command setting is immediately stored in the current activated profile. If the MT is set in automatic selection mode (<mode>= 0), only the mode will be saved. If the MT is set in manual mode (<mode>= 1), also the format (<format>) and operator (<oper>) will be stored in the profile.
- **<mode>=4**: the module starts a manual selection of the specified operator; if this operation is not successful, the module will start an automatic network selection and will remain in automatic mode.
- **<mode>=5 and <mode>=6**: an extended network search, also called deep scan, is triggered; all cells detected during the PLMN scan are reported at the AT interface, more precisely:
  - **for GSM networks**: all cells found of any visible PLMNs will be reported, including those belonging to the neighbour list of the serving cell. The command response includes the following data (if supported): AcT, MCC, MNC, LAC, CI, BSIC, Arfcn, RxLev (see the +CGED command for the parameter description)
  - **for UMTS networks**: all cells found on any visible PLMNs will be reported, including those belonging to the neighbour list of the serving cell. For each cell, the scan will trigger the additional reception of the SIB type 1 and type 3, to properly report the LAC, RAC, and CI of the cell. The command response includes the following data: MCC, MNC, LAC, RAC, CI, DLF, ULF, SC, RSCP LEV, ECN0 LEV (see the +CGED command for the parameter description)
- **<mode>=8**: a network timing advance search is performed
  - The network timing advance search is performed only on the serving cell and the 6 neighbour cells of BA list with the higher power levels.
  - The information text response always includes the following data for the serving cell and for the other 6 neighbour cells: MCC, MNC, LAC, CI, BSIC, Arfcn, RxLev (see the +CGED command for the parameter description) and TA. When the <CI> value is not valid, no data of the correspondent neighbour cell is inside the information text response.
  - It can be started only when the module is in idle mode and no cell reselection is ongoing. The network condition could sometimes increase the estimated response time.
  - No mobile terminated/originated SMS, PS or CS call are handled when the network timing advance search is running. Furthermore mobility management procedures (for example: routing area update procedure or location update procedure) are delayed after the end of timing advance search.

If the set command with <mode>=0 is issued, a further set command with <mode>=0 is managed as a user reselection (see the 3GPP TS 23.122 [70]), i.e. the module triggers a search for the HPLMN or a higher order PLMN. This is useful when roaming in areas where the HPLMN or a higher order PLMN is available. If no HPLMN or higher order PLMN is found, the module remains in the state it was in prior to the search (e.g. camped and/or registered on the PLMN before the search).

The PLMN search cannot be performed in RRC connected state when the RAT is 3G or 4G, hence no PLMN list will be returned at the end of the PLMN scan attempt.

The user should not rely only on the set command "OK" final result code as a confirmation that the network selection has been performed. To determine check the current network registration status:

- TOBY-L4 / TOBY-L2 / MPCI-L2 / LARA-R2 / TOBY-R2 / SARA-U2 / LISA-U2 / LISA-U1 / SARA-G4 / SARA-G3 / LEON-G1 - Network registration status +CREG
- TOBY-L4 / TOBY-L2 / MPCI-L2 / LARA-R2 / TOBY-R2 / SARA-U2 / LISA-U2 / LISA-U1 / SARA-G4 / SARA-G3 / LEON-G1 - GPRS network registration status +CGREG
- TOBY-L4 / TOBY-L2 / MPCI-L2 / LARA-R2 / TOBY-R2 - EPS network registration status +CEREG

☞ The manual PLMN selection can fail due to the MNO control on the network selection procedure via EF_{CSP} setting; for further details see +PACSP.

☞ TOBY-L4 / TOBY-L2 / MPCI-L2 / SARA-U260-00S / SARA-U270-00S / SARA-U270-00X / SARA-U280-00 / LISA-U200-00S / LISA-U200-01S / LISA-U200-02S / LISA-U200-52S / LISA-U200-62S / LISA-U230 / LISA-U260 / LISA-U270 / LISA-U1 / SARA-G3 / LEON-G1
If more than one PLMN have the same alphanumeric name in the ROM PLMN name list (see +COPN), a manual PLMN selection can fail because the device tries to register only on the first PLMN in the ROM list whose alphanumeric code matches the one specified in the +COPS command.

☞ LARA-R2 / TOBY-R2 / SARA-U201 / SARA-U260-03S / SARA-U270-03A / SARA-U270-03S / SARA-U270-04B / SARA-U270-53S / SARA-U270-73S / SARA-U280-03S / LISA-U200-03S / LISA-U200-83S / LISA-U201

The response time of a manual PLMN selection specifying the target network in alphanumeric format can exceed the documented value, because the device tries to register on all PLMNs in the ROM list whose alphanumeric code matches the one specified in the +COPS command.

☞ The user should not enter colliding requests (e.g. AT+COPS=0 and AT+COPS=2) on different communication ports, because this might cause interoperability issues in case overlapping registration and deregistration requests are not handled by the network, and could result in an unpredictable registration state. Similarly, when notified of a GPRS mobile terminated detach event (e.g. via +CGEV URC), it is recommended to wait a few seconds before entering AT+COPS=2 in order to let the pending registration procedure (automatically triggered by the module in most cases) successfully end.

☞ The test command returns long and short <oper> strings from the module's ROM PLMN name list (see +COPN). To handle possible mismatches between the PLMN names returned by the test command and the read command, the numeric format should be preferred.

7.4.2 TOBY-L4 / TOBY-L2 / MPCI-L2 / LARA-R2 / TOBY-R2 / SARA-U2 / LISA-U2 / LISA-U1 / SARA-G4 / SARA-G3 / LEON-G1 Syntax

Type	Syntax	Response	Example
Set	AT+COPS=[<mode>[,<format>[,<oper>[,<AcT>]]]]	**If <mode>=0, 1, 2, 3, 4:** OK	AT+COPS=0,0 OK
		If <mode>=5 and on GSM networks: [MCC:<MCC>, MNC:<MNC>, LAC:<LAC>, CI:<CI>, BSIC:<BSIC>, Arfcn:<Arfcn>, RxLev:<RxLev> [MCC:<MCC>, MNC:<MNC>, LAC:<LAC>, CI:<CI>, BSIC:<BSIC>, Arfcn:<Arfcn>, RxLev:<RxLev> [...]]] OK	AT+COPS=5 MCC:222, MNC: 88, LAC:55fa, CI:ffff, BSIC:3f, Arfcn:00104, RxLev:037 MCC:222, MNC: 10, LAC:4e54, CI:ffff, BSIC:32, Arfcn:00080, RxLev:032 ... ... MCC:222, MNC: 88, LAC:55fa, CI:1d39, BSIC:3d, Arfcn:00756, RxLev:005 OK
		If <mode>=5 and on UMTS networks: [MCC:<MCC>, MNC:<MNC>, LAC:<LAC>, RAC:<RAC>, CI:<CI>, DLF:<dl_frequency>, ULF:<ul_frequency>, SC:<SC>, RSCP LEV:<rscp_lev>, ECN0 LEV:<ecn0_lev> [MCC:<MCC>, MNC:<MNC>, LAC:<LAC>, RAC:<RAC>, CI:<CI>, DLF:<dl_frequency>, ULF:<ul_frequency>, SC:<SC>, RSCP LEV:<rscp_lev>, ECN0 LEV:<ecn0_lev> [...]]] OK	AT+COPS=5 MCC:222, MNC:10, LAC:61ef, RAC:14, CI:07d2088, DLF:10788, ULF: 9838, SC:81, RSCP LEV:23, ECN0 LEV:41 MCC:222, MNC:10, LAC:61ef, RAC:14, CI:07d2085, DLF:10813, ULF: 9863, SC:81, RSCP LEV:26, ECN0 LEV:41 ... ... MCC:222, MNC:01, LAC:ef8d, RAC:0, CI:52d36fb, DLF:10688, ULF: 9738, SC:285, RSCP LEV:16, ECN0 LEV:32 OK
		If <mode>=6 and on GSM networks: [<AcT>,<MCC>,<MNC>,<LAC>,<CI>,<BSIC>,<Arfcn>,<RxLev> [<AcT>,<MCC>,<MNC>,<LAC>,<CI>,<BSIC>,<Arfcn>,<RxLev> [...]]] OK	AT+COPS=6 0,222,88,55fa,ffff,3f,00104,037 ... 0,222,10,4e54,ffff,32,00080,032 ... OK
		If <mode>=6 and on UMTS networks: [<MCC>,<MNC>,<LAC>,<RAC>,<CI>,<dl_frequency>,<ul_frequency>,<SC>,<RSCP LEV>,<ecn0_lev>	AT+COPS=6 222,99,754f,2,03554d7,10713,9763,341,255,14 ...

Type	Syntax	Response	Example
		[<MCC>,<MNC>,<LAC>,<RAC>,<CI>,<dl_frequency>,<ul_frequency>,<SC>,<RSCPLEV>,<ecn0_lev> [...]]] OK	222,01,ef8d,0,52d2647,10663,9713,453,4,23 ... OK
		If <mode>=8 and on GSM networks: [MCC:<MCC>, MNC:<MNC>, LAC:<LAC>, CI:<CI>, BSIC:<BSIC>, Arfcn:<Arfcn>, RxLev:<RxLev>, TA:<TA> [MCC:<MCC>, MNC:<MNC>, LAC:<LAC>, CI:<CI>, BSIC:<BSIC>, Arfcn:<Arfcn>, RxLev:<RxLev>, TA:<TA> [...]]] OK	AT+COPS=8 MCC:222, MNC: 10, LAC:4e54, CI:12f1, BSIC:3f, Arfcn:00104, RxLev:037, TA:3 MCC:222, MNC: 10, LAC:4e54, CI:8841, BSIC:32, Arfcn:00080, RxLev:032, TA:5 MCC:222, MNC: 10, LAC:4e54, CI:1ef4, BSIC:31, Arfcn:00082, RxLev:022, TA:255 ... MCC:222, MNC: 10, LAC:55fa, CI:1d39, BSIC:3d, Arfcn:00756, RxLev:005, TA:7 OK
Read	AT+COPS?	+COPS: <mode>[,<format>,<oper>[,<AcT>]] OK	+COPS: 0,0,"vodafone IT" OK
Test	AT+COPS=?	+COPS: [(<stat>, long <oper>, short <oper>, numeric <oper>[,<AcT>])[,(<stat>, long <oper>, short <oper>, numeric <oper>[,<AcT>]),[...]]],(list of supported <mode>s),(list of supported <format>s) OK	+COPS: (2,"vodafone IT","voda IT","22210"),(1,"SI vodafone","vodafone SI","29340"),(1,"I WIND","I WIND","22288"),(1,"I TIM","TIM","22201"),(1,"MOBITEL","MOBITEL","29341"),,(0-4),(0-2) OK

7.4.3 TOBY-L4 / TOBY-L2 / MPCI-L2 / LARA-R2 / TOBY-R2 / SARA-U2 / LISA-U2 / LISA-U1 / SARA-G4 / SARA-G3 / LEON-G1 Defined values

Parameter	Type	Description
<mode>	Number	Is used to chose whether the network selection is automatically done by the MT or is forced by this command to the operator <oper> given in the format <format>: • 0 (default value and factory-programmed value): automatic (<oper> field is ignored) • 1: manual • 2: deregister from network • 3: set only <format> • 4: manual/automatic • 5: extended network search • 6: extended network search without the tags (e.g. MCC, RxLev will not be printed, see the syntax and the command example) • 8: network timing advance search
<format>	Number	• 0 (factory-programmed value): long alphanumeric <oper> • 1: short format alphanumeric <oper> • 2: numeric <oper>
<oper>	String	Given in format <format> this field may be up to 24 characters long for long alphanumeric format, up to 10 characters for short alphanumeric format and 5 or 6 characters long for numeric format (MCC/MNC codes). The factory-programmed value is FFFF (undefined).
<stat>	Number	• 0: unknown • 1: available • 2: current • 3: forbidden
<AcT>	Number	Indicates the radio access technology: • 0: GSM • 1: GSM COMPACT • 2: UTRAN

Parameter	Type	Description
		• 3: GSM with EDGE availability • 4: UTRAN with HSDPA availability • 5: UTRAN with HSUPA availability • 6: UTRAN with HSDPA and HSUPA availability • 7: LTE • 8: EC-GSM-IoT (A/Gb mode) • 9: E-UTRAN (NB-S1 mode) Allowed values: • TOBY-L4 - 0, 1, 2, 3, 4, 5, 6, 7 • TOBY-L200 / TOBY-L201 / TOBY-L210 / TOBY-L220-02S / TOBY-L280 / MPCI-L200 / MPCI-L201 / MPCI-L210 / MPCI-L220-02S / MPCI-L280 - 0, 1, 2, 3, 4, 5, 6, 7 • TOBY-L220-62S / MPCI-L220-62S - 7 • TOBY-R200 - 0, 1, 2, 3, 4, 5, 6, 7 • LARA-R202 / LARA-R280 / TOBY-R202 - 2, 4, 5, 6, 7 • LARA-R203 / LARA-R204 / LARA-R220 - 7 • LARA-R211 - 0, 1, 3, 7 • SARA-U201 / SARA-U260 / SARA-U270-00S / SARA-U270-00X / SARA-U270-03A / SARA-U270-03S / LISA-U2 / LISA-U1 - 0, 2 • SARA-U270-53S / SARA-U270-73S / SARA-U280 - 2
<TA>	Number	Timing Advance; the range is 0-63. If the information is not known or not detectable or currently not available, the value is 255.

7.4.4 Notes

TOBY-L4 / TOBY-L2 / MPCI-L2 / LARA-R2 / TOBY-R2 / SARA-U2 / LISA-U2 / LISA-U1 / SARA-G4 / SARA-G3 / LEON-G1

- <format> and <oper> parameters are optional only if the value of <mode> parameter is 0, 2 or 3.
- If the antenna is not connected, then the information text response to the test command is: +COPS: ,, (0-4),(0-2)

TOBY-L4

- If a manual PLMN selection fails to find the specified PLMN, the modules autonomously searches for the HPLMN and, if it is visible, it registers on it; in this case the AT+COPS=1 command ends successfully as if the user had manually selected the HPLMN.
- When <format> is set to alphanumeric (0 or 1) the read command's <oper> value is retrieved from the first match found in the following "name sources" (from highest to lowest priority):
  - EF_{OPL} and EF_{PNN} files (SIM card dependent, see below)
  - NITZ service (network dependant)
  - CPHS operator name string (SIM card dependent)
  - Hardcoded list in the module's firmware

  If no match is found in the "name sources" the broadcasted MCC-MNC is displayed. If the PLMN network name and operator name list services are "enabled" in the SIM card, then the EF_{OPL} and EF_{PNN} are used for displaying the <oper> name if a match can be found.
- <mode>=5 (extended network search), <mode>=6 (extended network search without the tags) and <mode>=8 (network timing advance search) are not supported.
- Issue the AT+CFUN=4,1 command to start with auto-COPS disabled (AT+COPS=2).

TOBY-L4906-50A

- The command setting is not stored in NVM.

TOBY-L2 / MPCI-L2

- When <format> is set to alphanumeric (0 or 1) the read command's <oper> value is retrieved from the first match found in the following "name sources" (from highest to lowest priority):
  - EF_{OPL} and EF_{PNN} files (SIM card dependent, see below)
  - NITZ service (network dependent)
  - CPHS operator name string (SIM card dependent)
  - Hardcoded list in the module's firmware

If no match is found in the "name sources" the broadcasted MCC-MNC is displayed. If the PLMN network name and operator name list services are "enabled" in the SIM card, then the EF_{OPL} and EF_{PNN} are used for displaying the <oper> name if a match can be found.

- The user reselection cannot be managed through the issuing of two set commands with <mode>=0.
- In case of 3G cells, regardless of the actual HSPA support, the <AcT> value in the information text response of the test command is 2.
- If the current network selection mode is manual, by issuing the set command with <mode>=0 the module triggers a search for the HPLMN.
- In case of 2G cells, regardless of the actual EGPRS support, the <AcT> value in the information text response of the test command is 0.
- If the module is set to "CG" class with +CGCLASS command, the manual selection of a forbidden PLMN shall be triggered with +UCGOPS command; the AT+COPS=1 command cannot be issued for this purpose.
- <mode>=5 (extended network search) is not supported.
- <mode>=6 (extended network search without the tags) is not supported.
- <mode>=8 (network timing advance search) is not supported.
- If a network with MCC|MNC not in the network operator name list is available on air interface, the numeric value will be used also as short and long alphanumeric operator name.

LARA-R2 / TOBY-R2

- If a manual PLMN selection fails to find the specified PLMN, the modules autonomously searches for the HPLMN and, if it is visible, it registers on it; in this case the AT+COPS=1 command ends successfully as if the user had manually selected the HPLMN.
- When <format> is set to alphanumeric (0 or 1) the read command's <oper> value is retrieved from the first match found in the following "name sources" (from highest to lowest priority):
  - EF_{OPL} and EF_{PNN} files (SIM card dependent, see below)
  - NITZ service (network dependant)
  - CPHS operator name string (SIM card dependent)
  - Hardcoded list in the module's firmware

  If no match is found in the "name sources" the broadcasted MCC-MNC is displayed. If the PLMN network name and operator name list services are "enabled" in the SIM card, then the EF_{OPL} and EF_{PNN} are used for displaying the <oper> name if a match can be found.
- In 2G/3G RAT, +COPS set command with <mode>=0 ,1 or 4 will return OK after CS registration has been accomplished; if another +COPS set command with <mode>=0,1 or 4 is issued while the PS registration is pending, an error can be returned. In this case the user shall check +CGREG and retry the +COPS command as soon as the PS registration status is updated.
- <mode>=5, 6 and 8 are not supported.

SARA-U2 / LISA-U2 / LISA-U1

- When <format> is set to alphanumeric (0 or 1) the read command's <oper> value is retrieved from the first match found in the following "name sources" (from highest to lowest priority):
  - EF_{OPL} and EF_{PNN} files (SIM card dependent, see below)
  - NITZ service (network dependant)
  - CPHS operator name string (SIM card dependent)
  - Hardcoded list in the module's firmware

  If no match is found in the "name sources" the broadcasted MCC-MNC is displayed. If the PLMN network name and operator name list services are "enabled" in the SIM card, then the EF_{OPL} and EF_{PNN} are used for displaying the <oper> name if a match can be found.
- <mode>=8 (network timing advance search) is not supported.
- The <AcT> parameter is not available in the information text response of the set command with <mode>=6 (extended network search without the tags).

SARA-U260-00S / SARA-U270-00S / SARA-U270-00X / SARA-U280-00S / LISA-U200-00S / LISA-U200-01S / LISA-U200-02S / LISA-U200-52S / LISA-U200-62S / LISA-U230 / LISA-U260 / LISA-U270

- If a manual PLMN selection fails to find the specified PLMN, the modules autonomously searches for the HPLMN and, if it is visible, it registers on it; in this case the AT+COPS=1 command ends successfully as if the user had manually selected the HPLMN.

- <mode>=6 (extended network search without the tags) is not supported.
- In GSM networks, the extended network search will not report the neighbour cells (BA - BCCH Allocation list) of the 2G serving cell. Such cells are reported by AT+CGED command if <mode> is set e.g. to 5.

SARA-G4

- The AT command settings are not automatically stored in the current activated profile.
- The <AcT> parameter is only available in the information text response of the set command with <mode>=6 (extended network search without the tags).
- Supporting <mode>=5 the following restrictions apply:
  - If the SIM card is inserted and the PIN verification is enabled but has not been verified, <mode>=5 cannot be used.
  - If the SIM card is not inserted, <mode>=5 cannot be immediately used after a switch on. Before issuing the command, the RF circuits must be enabled, e.g. by starting an emergency call or entering AT+COPS=0.
- If the cellular module is de-registered from the network (<mode>=2) it is not possible to start a network scan (with AT+COPS=? or AT+COPS=5 or AT+COPS=6) until AT+COPS is invoked with <mode>=0 or 1.
- If the RPLMN (Registered PLMN) is not present in the ROM PLMN name list, the read command displays <oper> in the format <MCC>:<MNC>.
- <mode>=8 (network timing advance search) is not supported.

SARA-G3 / LEON-G1

- The AT command settings are not automatically stored in the current activated profile.
- When the command is aborted during the execution the final result code is "OK".
- When the <mode> parameter is set to manual or manual/automatic (1 or 4), set the <format> parameter to numeric (2).
- The <AcT> parameter is only available in the information text response of the set command with <mode>=6 (extended network search without the tags).
- Supporting <mode>=5 the following restrictions apply:
  - If the SIM card is inserted and the PIN verification is enabled but has not been verified, <mode>=5 cannot be used.
  - If the SIM card is not inserted, <mode>=5 cannot be immediately used after a switch on. Before issuing the command, the RF circuits must be enabled, e.g. by starting an emergency call or entering AT+COPS=0.
- If the cellular module boots with <mode>=2 it is not possible to start a network scan (with AT+COPS=? or AT+COPS=5 or AT+COPS=6) until AT+COPS is invoked with <mode>=0 or 1.
- If the RPLMN (Registered PLMN) is not present in the ROM PLMN name list, the read command displays <oper> in the format <MCC>:<MNC>.

SARA-G300 / SARA-G310 / SARA-G340-00S / SARA-G340-01S / SARA-G350-00S / SARA-G350-00X / SARA-G350-01B / SARA-G350-01S

- The extended network search will not report the neighbour cells (BA - BCCH Allocation list) of the serving cell. Such cells are reported by AT+CGED command if <mode> is set e.g. to 5.
- <mode>=6 (extended network search without the tags) is not supported.
- <mode>=8 (network timing advance search) is not supported.

LEON-G1

- The extended network search will not report the neighbour cells (BA - BCCH Allocation list) of the serving cell. Such cells are reported by AT+CGED command if <mode> is set e.g. to 5.
- <mode>=8 (network timing advance search) is not supported.

LEON-G100-06S

- <mode>=6 (extended network search without the tags) is not supported.

7.5 MCC update table +UNVMMCC

+UNVMMCC						
Modules	TOBY-L4					
	LARA-R2 TOBY-R2					
	SARA-U201 SARA-U260-03S SARA-U270-03A SARA-U270-03S SARA-U270-04B SARA-U270-53S SARA-U270-73S SARA-U280-03S LISA-U200-03S LISA-U200-83S LISA-U201					
Attributes	**Syntax**	**PIN required**	**Settings saved**	**Can be aborted**	**Response time**	**Error reference**
	partial	No	NVM	No	-	+CME Error

7.5.1 Description

Allows the access to the MCC update list. This list is a writeable extension to the MCC Nettype List.

The set command overwrites the entry if it has already been entered. The MCC update list is stored in NVM.

The list is first stored in the volatile NVM mirror, and the NVM copy is then updated in the background. It is recommended to power cycle the module after the list is updated.

7.5.2 Syntax

Type	Syntax	Response	Example
Set	AT+UNVMMCC=<mode>[,<idx>[,<mcc>,<gsmbands>,<umtsbands>,<lte_bands_fdd>,<lte_bands_tdd>]]	OK	AT+UNVMMCC=1,10,5,4,2,2,8 OK
Read	AT+UNVMMCC?	+UNVMMCC: <idx>,<mcc>,<gsmbands>,<umtsbands>,<lte_bands_fdd>,<lte_bands_tdd> [...] +UNVMMCC: <idx>,<mcc>,<gsmbands>,<umtsbands>,<lte_bands_fdd>,<lte_bands_tdd> OK	+UNVMMCC: 1,10,5,4,2,2,8 [...] +UNVMMCC: 20,0,0,0 OK
Test	AT+UNVMMCC=?	+UNVMMCC: (list of supported <mode>s),(list of supported <idx>s),(list of supported <mcc>s),(list of supported <gsmbands>s),...,(list of supported <umtsbands>s),(list of supported <lte_bands_fdd>s),(list of supported <lte_bands_tdd>s) OK	+UNVMMCC: (0-1),(1-20),(0-999),(1-128),(1-8192),(0-4294967293),(0-4294967293) OK

7.5.3 Defined values

Parameter	Type	Description
<mode>	Number	Defines the command. • 0: clear one or all entries in a list: o Select an entry to clear with <idx> o If <idx> is omitted, all the entries will be cleared • 1: write one entry
<idx>	Number	Index of the entries in the MCC update list. The allowed range is 1-20.
<mcc>	Number	Mobile Country Code. The allowed range is 0-999.
<gsmbands>	Number	GSM/2G band selection. The parameter is a bit mask, 16-bits in length given as an integer. Only the values listed below are allowed. • 1: PGSM 900 • 2: EGSM 900 • 4: RGSM 900 • 8: DCS 1800 • 16: PCS 1900 • 32: GSM 450 • 64: GSM 480

Parameter	Type	Description
		• 128: GSM 850
<umtsbands>	Number	UMTS/3G band selection. The parameter is a bit mask, 16-bits in length given as an integer. Only the values listed below are allowed. • 1: band 1 • 2: band 2 • 4: band 3 • 8: band 4 • 16: band 5 • 32: band 6 • 64: band 7 • 128: band 8 • 256: band 9 • 512: band 10 • 1024: band 11 • 2048: band 12 • 4096: band 13 • 8192: band 14
<lte_bands_tdd>	Number	LTE TDD bands. It is a 32-bit bitmap, each bit representing one LTE TDD band (LTE bands 33 to 64), (see 3GPP TS 36.101 section 5.5 [99]). The bitmap value can be formed as below: • 1: E-UTRA band 33 • 2: E-UTRA band 34 • 4: E-UTRA band 35 • 8: E-UTRA band 36 • ..... • 2147483648: E-UTRA band 64 For multiple band selection, the corresponding bits should be OR'ed and accordingly the bitmap value should be given.
<lte_bands_fdd>	Number	LTE FDD bands. It is a 32-bit bitmap, each bit representing one LTE FDD band (LTE bands 1 to 32), (see 3GPP TS 36.101 section 5.5 [99]). The bitmap value can be formed as below: • 1: E-UTRA band 1 • 2: E-UTRA band 2 • 4: E-UTRA band 3 • 8: E-UTRA band 4 • ..... • 2147483648: E-UTRA band 32 For multiple band selection, the corresponding bits should be OR'ed and accordingly the bitmap value should be given.

7.5.4 Notes

- The 2G / 3G / 4G tables are by default empty.

SARA-U2 / LISA-U2

- The <lte_bands_fdd> and <lte_bands_tdd> parameters are not supported.

LARA-R2 / TOBY-R2

- The <lte_bands_tdd> parameter setting is ignored.

7.6 PLMN information list +UNVMPLMN

+UNVMPLMN						
Modules	TOBY-L4					
	LARA-R2 TOBY-R2					
	SARA-U201 SARA-U260-03S SARA-U270-03A SARA-U270-03S SARA-U270-04B SARA-U270-53S SARA-U270-73S SARA-U280-03S LISA-U200-03S LISA-U200-83S LISA-U201					
Attributes	**Syntax**	**PIN required**	**Settings saved**	**Can be aborted**	**Response time**	**Error reference**
	partial	No	NVM	No	-	+CME Error

7.6.1 Description

Provides the access to the protocol stack's PLMN tables used to improve the PLMN selection procedure. A table is available for each RAT (GSM RAT, UMTS RAT and LTE RAT).

The PLMN information is stored in NVM and may be updated by the protocol stack. Thus the +COPS=2 AT command shall be issued before updating the list.

After the list is updated, the module shall be power cycled.

7.6.2 Syntax

Type	Syntax	Response	Example
PLMN tables management generic syntax			
Set	**GSM / UMTS** AT+UNVMPLMN=<op_code>,<rat>[,<idx>[,<mcc>,<mnc>,<bands>[,<f1>[,<f2>...[,<fn>]]]]]	OK	**GSM / UMTS** AT+UNVMPLMN=1,1,1,222,1,1,10663,10688,10638 OK
	LTE AT+UNVMPLMN=<op_code>,<rat>[,<idx>[,<mcc>,<mnc>,<lte_bands_fdd>,<f1>,[<f2>],...,[<fn>],<lte_bands_tdd>,<channel_bw>]]	OK	**LTE** AT+UNVMPLMN=1,2,1,222,1,1,10663,10688,10638,,,,,,,,0,0 OK
PLMN tables cleaning			
Set	AT+UNVMPLMN=0,<rat>[,<idx>]	OK	AT+UNVMPLMN=0,1,1 OK
PLMN tables editing			
Set	**GSM / UMTS** AT+UNVMPLMN=1,<rat>,<idx>,<mcc>,<mnc>,<bands>,<f1>[,<f2>...[,<fn>]]	OK	**GSM / UMTS** AT+UNVMPLMN=1,1,1,222,1,1,10663,10688,10638 OK
	LTE AT+UNVMPLMN=1,<rat>,<idx>,<mcc>,<mnc>,<lte_bands_fdd>,<f1>,[<f2>],...,[<fn>],<lte_bands_tdd>,<channel_bw>	OK	**LTE** AT+UNVMPLMN=1,2,1,222,10,1,10788,10838,10813,,,,,,,,1,63 OK
PLMN tables reading			
Set	AT+UNVMPLMN=2,<rat>[,<idx>]	**GSM / UMTS** +UNVMPLMN: <rat>,<idx>,<mcc>,<mnc>,<bands>,<f1>[,<f2>...[,<fn>]] [...] [+UNVMPLMN: <rat>,<idx>,<mcc>,<mnc>,<bands>,<f1>[,<f2>...[,<fn>]]] OK	**GSM / UMTS** AT+UNVMPLMN=2,1 +UNVMPLMN: 1,1,222,1,1,10663,10688,10638 +UNVMPLMN: 1,2,222,88,1,10563,10588,10613 ... +UNVMPLMN: 1,50,0,0,0 OK
		LTE	**LTE**

Type	Syntax	Response	Example
		+UNVMPLMN: <rat>,<idx>,<mcc>,<mnc>,<lte_bands_fdd>,<f1>[,<f2>...[,<fn>]],<lte_bands_tdd>,<channel_bw> [...] [+UNVMPLMN: <rat>,<idx>,<mcc>,<mnc>,<lte_bands_fdd>,<f1>[,<f2>...[,<fn>]],<lte_bands_tdd>,<channel_bw>] OK	AT+UNVMPLMN=2,2,1 +UNVMPLMN: 2,1,222,10,1,10788,10838,10813,1,63 OK
Test	AT+UNVMPLMN=?	+UNVMPLMN: (list of supported <mode>s),(list of supported <rat>s),(list of supported <idx>s), (list of supported <mcc>s), (list of supported <mnc>s),(list of supported <bands>s),(list of supported <f1>s) ...,(list of supported <fn>s),(list of supported <lte_bands_tdd>s),(list of supported <channel_bw>s) OK	**GSM / UMTS** +UNVMPLMN: (0-2),(0,1),(1-50),(0-999),(0-999),(1-8192),(0-10838),...,(0-10838) OK **LTE** +UNVMPLMN: (0-2),(0-2),(1-50),(0-999),(0-999),(0-4294967293),(0-65535),...,(0-65535),(0-4294967293),(0-63) OK

7.6.3 Defined values

Parameter	Type	Description
<op_code>	Number	Defines the command to be executed. Allowed values: • 0: clear one or all the entries in a list; if the <idx> parameter is omitted, all the entries will be cleared • 1: write one entry; at least one frequency must be provided (<f1>) • 2: read one or all entries in a list; if the <idx> parameter is omitted, all the entries will be read
<rat>	Number	Selects the PLMN information list: • 0: GSM list • 1: UMTS list • 2: LTE list
<idx>	Number	Index of the entries in the PLMN information lists. The allowed range is 1-50. If the parameter is omitted, all the entries will be cleared or read depending on the <op_code> parameter value.
<mcc>	Number	Mobile Country Code. The allowed range is 0-999.
<mnc>	Number	Mobile Network Code. The allowed range is 0-999.

<bands>	Number	Band:
		• GSM:
		  o 1: PGSM 900
		  o 2: EGSM 900
		  o 4: RGSM 900
		  o 8: DCS 1800
		  o 16: PCS 1900
		  o 32: GSM 450
		  o 64: GSM 480
		  o 128: GSM 850
		• UMTS:
		  o 1: band 1
		  o 2: band 2
		  o 4: band 3
		  o 8: band 4
		  o 16: band 5
		  o 32: band 6

Parameter	Type	Description
		o 64: band 7 o 128: band 8 o 256: band 9 o 512: band 10 o 1024: band 11 o 2048: band 12 o 4096: band 13 o 8192: band 14 o 262144: band 19 o 524288: band 20 o 1048576: band 21
<lte_bands_fdd>	Number	LTE FDD bands. It is a 32-bit bitmap, each bit representing one LTE FDD band (LTE bands 1 to 32), (see 3GPP TS 36.101 section 5.5 [99]). The bitmap value can be formed as below: • 1: E-UTRA band 1 • 2: E-UTRA band 2 • 4: E-UTRA band 3 • 8: E-UTRA band 4 • ..... • 2147483648: E-UTRA band 32 For multiple band selection, the corresponding bits should be OR'ed and accordingly the bitmap value should be given.
<f1>...<fn>	Number	Frequency. In GSM represents the ARFCN, in UMTS the UARFCN, in LTE the EARFCN. ☞ n's range is 1-32 in GSM, 1-10 in UMTS and LTE.
<lte_bands_tdd>	Number	LTE TDD bands. It is a 32-bit bitmap, each bit representing one LTE TDD band (LTE bands 33 to 64), (see 3GPP TS 36.101 section 5.5 [99]). The bitmap value can be formed as below: • 1: E-UTRA operating band 33 • 2: E-UTRA band 34 • 4: E-UTRA band 35 • 8: E-UTRA band 36 • ..... • 2147483648: E-UTRA band 64 For multiple band selection, the corresponding bits should be OR'ed and accordingly the bitmap value should be given.
<channel_bw>	Number	LTE channel bandwidth. It is a 8-bit bitmap representing up to six possible LTE channel bandwidth (see 3GPP TS 36.101 section 5.6 [99]). The bitmap value can be formed as below: • 1: LTE channel bandwidth 1.4 MHz • 2: LTE channel bandwidth 3 MHz • 4: LTE channel bandwidth 5 MHz • 8: LTE channel bandwidth 10 MHz • 16: channel bandwidth 15 MHz • 32: LTE channel bandwidth 20 MHz Bits 6,7 are unused, shall be set to 0. For multiple band selection, the corresponding bits should be OR'ed and accordingly the bitmap value should be given.

7.6.4 Notes

- As factory-programmed settings the PLMN tables are empty, but it may be updated by the protocol stack.
- North American PLMNs whose 3rd MNC digit is 0, may be displayed with a 2 digit MNC (1st and 2nd MNC digit). For example <mcc>=310, <mnc>=150 may be displayed as [...]310,15 (see 3GPP TS 23.122 [70] Annex A)

SARA-U2 / LISA-U2

- <lte_bands_fdd>, <lte_bands_tdd>, <channel_bw> are not supported.

- The maximum value for <bands> is 8192.

7.7 Radio Access Technology (RAT) selection +URAT

+URAT						
Modules	TOBY-L4 TOBY-L2 MPCI-L2					
	LARA-R2 TOBY-R2					
	SARA-U2 LISA-U2 LISA-U1					
Attributes	**Syntax**	**PIN required**	**Settings saved**	**Can be aborted**	**Response time**	**Error reference**
	partial	No	NVM	No	-	+CME Error

7.7.1 Description

Forces the selection of the Radio Access Technology (RAT) in the protocol stack. On the subsequent network registration (+COPS, +CGATT) the selected RAT is used.

If dual or tri mode is selected, it is also possible to select the preferred RAT, which determines which RAT is selected first (if available). If the preferred RAT is omitted, it will be set by default to the higher RAT available. If tri mode is selected, it is also possible to select the second preferred RAT (if the preferred RAT was also selected). This parameter determines which RAT is selected if the first preferred RAT is not available.

☞ Any change in the RAT selection must be done in the detached state issuing the AT+COPS=2 AT command.
See Notes for the procedure to enter the detach state for TOBY-L2 / MPCI-L2 series

☞ u-blox cellular modules are certified according to all the capabilities and options stated in the Protocol Implementation Conformance Statement document (PICS) of the module. The PICS, according to 3GPP TS 51.010-2 [84], 3GPP TS 34.121-2 [85], 3GPP TS 36.521-2 [115] and 3GPP TS 36.523-2 [116], is a statement of the implemented and supported capabilities and options of a device. If the user changes the command settings during the certification process, the PICS of the application device integrating a u-blox cellular module must be changed accordingly.

☞ In dual mode and tri mode, all the requested Access Stratum protocols are active and Inter-RAT measurements as well as Inter-RAT handovers may be performed (if ordered by the network).

☞ TOBY-L200 / TOBY-L201 / MPCI-L200 / MPCI-L201 / LARA-R202 / LARA-R203 / TOBY-R2
AT&T RAT balancing can force RAT usage regardless of the RAT imposed by means of the AT+URAT command.

7.7.2 Syntax

Type	Syntax	Response	Example
Set	AT+URAT=<SelectedAcT>[,<PreferredAct>[,<2ndPreferredAct>]]	OK	AT+URAT=1,0 OK
Read	AT+URAT?	+URAT: <SelectedAcT>[,<PreferredAct>[,<2ndPreferredAct>]] OK	+URAT: 1,2 OK
Test	AT+URAT=?	+URAT: (list of the supported <SelectedAcT>s),(list of the supported <PreferredAct>s),(list of the supported <2ndPreferredAct>s) OK	+URAT: (0-6),(0,2,3),(0,2,3) OK

7.7.3 Defined values

Parameter	Type	Description
<SelectedAcT>	Number	Indicates the radio access technology and may be: • 0: GSM / GPRS / eGPRS (single mode) • 1: GSM / UMTS (dual mode) • 2: UMTS (single mode) • 3: LTE (single mode)

Parameter	Type	Description
		• 4: GSM / UMTS / LTE (tri mode) • 5: GSM / LTE (dual mode) • 6: UMTS / LTE (dual mode) • 7: LTE Cat.M1 • 8: LTE Cat.NB1 • 9: GPRS / eGPRS
<PreferredAct>	Number	Indicates the preferred access technology; it is ignored if dual mode or tri mode are not selected. • 0: GSM / GPRS / eGPRS • 2: UTRAN • 3: LTE • 7: LTE Cat.M1 • 8: LTE Cat.NB1 • 9: GPRS / eGPRS
<2ndPreferredAct>	Number	Indicates the second preferred access technology; it is ignored if tri mode is not selected. • 0: GSM / GPRS / eGPRS • 2: UTRAN • 3: LTE • 7: LTE Cat.M1 • 8: LTE Cat.NB1 • 9: GPRS / eGPRS

7.7.4 Notes

- AT&T's EF_{RAT} mode contains the RAT mode setting, the RAT mode setting is the mode that the module shall be set to. Thus this setting may override +URAT's <SelectedAcT> and <PreferredAct> loaded at boot time.

TOBY-L4

- The factory-programmed value of <SelectedAcT> is 4.
- The default value and factory-programmed value of <PreferredAct> is 3.
- The <2ndPreferredAct> parameter is not supported.
- <SelectedAcT>=7, 8, 9 and <PreferredAct>=7, 8, 9 are not supported.

TOBY-L2 / MPCI-L2

- The factory-programmed value of <SelectedAcT> is 4.
- The default value and factory-programmed value of <PreferredAct> is 3.
- <SelectedAcT>=7, 8, 9 and <PreferredAct>=7, 8, 9 are not supported.
- <2ndPreferredAct> is not supported.
- Issue the AT+CFUN=4 AT command to detach the module from the network. Use AT+CFUN=1 to return to the module full functionality.
- The set command changing RAT selection (although entered in de-registered state) re-activates the protocol stack by triggering a network scan. As such network scan may interfere with successive registration commands, that may answer with an error result code due to overlapping activities, it is suggested to wait 15 s after the +URAT set command before entering any AT command that triggers a PS or a CS registration. Alternatively, the user can neglect the error result code and wait for the module to complete the registration by polling the registration status or waiting for appropriate URCs.
- In boot phase and SIM refresh phase the RAT selection does not consider <PreferredAct> parameter value. If possible, the module always registers on 3G RAT (or 2G RAT if 3G RAT is not available) and then performs a reselection on the highest available RAT. It is possible to register directly on the highest available RAT in case if it was the last selected in AT+COPS=2 / AT+COPS=0 cycles if <SelectedAcT>= 5 (GSM / LTE dual mode).

TOBY-L200-02S / TOBY-L200-03A / TOBY-L200-03S / TOBY-L210-02S / TOBY-L210-03A / TOBY-L210-03S / TOBY-L210-62S / TOBY-L220 / TOBY-L280 / MPCI-L200-02S / MPCI-L200-03S / MPCI-L210-02S / MPCI-L210-03S / MPCI-L220 / MPCI-L280

- When a 2G only SIM is used (the +UUICC AT command can be used to check the SIM type), LTE support is implicitly disabled by the module because a 2G SIM cannot register on LTE radio access technology.

The +URAT read command will reflect the actual setting of the module. This automatic RAT adaptation occurs after the SIM has been read, e.g. after the PIN insertion.

TOBY-L201 / TOBY-L220-02S / MPCI-L201 / MPCI-L220-02S

- <SelectedAcT>=0, 1, 4, 5 are not supported. The factory-programmed value of <SelectedAcT> is 6.
- <PreferredAct>=0 is not supported.

TOBY-L220-62S / MPCI-L220-62S

- <SelectedAcT>=0, 1, 2, 4, 5, 6 are not supported. The factory-programmed value of <SelectedAcT> is 3.
- <PreferredAct>=0 is not supported.

LARA-R2 / TOBY-R2

- The RAT selection acts as follows:
  - The initial cell selection chooses <PreferredAct> = 2 (UTRAN)
  - The cell reselection to <PreferredAct> = 3 (LTE) is obtained when the DUT is forced to idle mode by preserving the context
  - After a AT+COPS=2 / AT+COPS=0 cycle the DUT registers on the last selected RAT (NVM saved)
- <SelectedAcT>=7, 8, 9, <PreferredAct>=7, 8, 9 and <2ndPreferredAct>=7, 8, 9 are not supported.

TOBY-R200

- The factory-programmed value of <SelectedAcT> is 4.
- If <SelectedAcT> = 4 (GSM / UMTS / LTE (tri mode)) the <2ndPreferredAct> parameter is not supported.
- If <SelectedAcT> = 4 or 6 the <PreferredAct> parameter is not supported.

LARA-R202 / LARA-R280 / TOBY-R202

- <SelectedAcT>=0, 1, 4, 5 are not supported. The factory-programmed value of <SelectedAcT> is 6.
- <PreferredAct>=0 is not supported.
- If <SelectedAcT> = 6 (UMTS / LTE (dual mode)) the <PreferredAct> selection is not supported

LARA-R203 / LARA-R204 / LARA-R220

- <SelectedAcT>=0, 1, 2, 4, 5, 6 are not supported. The factory-programmed value of <SelectedAcT> is 3.
- <PreferredAct> is not supported.

LARA-R211

- <SelectedAcT>=1, 2, 4, 6 are not supported. The factory-programmed value of <SelectedAcT> is 5.
- <PreferredAct>=2 is not supported. The factory-programmed value of <PreferredAct> is 3.
- If <SelectedAcT> = 6 (UMTS / LTE (dual mode)) the <PreferredAct> selection is not supported

SARA-U2 / LISA-U2 / LISA-U1

- <SelectedAcT>=3, 4, 5, 6, 7, 8, 9 are not supported. The factory-programmed value of <SelectedAcT> is 1.
- <PreferredAct>=3, 7, 8, 9 are not supported. The factory-programmed value of <PreferredAct> is 2.
- <2ndPreferredAct> is not supported.

SARA-U270-53S / SARA-U270-73S / SARA-U280

- <SelectedAcT>=0, 1 are not supported. The factory-programmed value of <SelectedAcT> is 2.
- <PreferredAct>=0 is not supported.

7.8 Display EONS names +UEONS

+UEONS						
Modules	TOBY-L2 MPCI-L2					
	LARA-R2 TOBY-R2					
	SARA-U2 LISA-U2 LISA-U1					
	SARA-G3 LEON-G1					
Attributes	**Syntax**	**PIN required**	**Settings saved**	**Can be aborted**	**Response time**	**Error reference**
	full	Yes	No	Yes	< 40 s	+CME Error

7.8.1 Description

This command displays the list of available networks adding EONS names if available. The list of available networks with details like long operator name, short operator name, MCC/MNC, Long EONS name, Short EONS name for each PLMN is reported. This command is an extension of AT+COPS=? command and it provides additionally EONS names for the available PLMN's.

7.8.2 Syntax

Type	Syntax	Response	Example
Action	AT+UEONS	+UEONS: [list of supported (<stat>, long alphanumeric <oper>,short alphanumeric <oper>,numeric <oper>[,<AcT>],[EONS long operator name],[EONS short operator name])s] OK	+UEONS: (2,"T-Mobile D","T-Mobile D","26201","T-Mob D"," T-Mobile De"), (3, "Vodafone.de", "Vodafone.de", "26202", "test network EONS", "test EONS"), (3,"E-Plus","E-Plus","26203"), (3,"o2 - de", "o2 - de","26207") OK
Test	AT+UEONS=?	OK	

7.8.3 Defined values

See the description of +COPS parameters.

7.8.4 Notes

SARA-G3 / LEON-G1

- the <AcT> parameter is not supported.

7.9 Display operator name +UDOPN

+UDOPN						
Modules	TOBY-L4 TOBY-L2 MPCI-L2					
	LARA-R2 TOBY-R2					
	SARA-U2 LISA-U2 LISA-U1					
	SARA-G3 LEON-G1					
Attributes	**Syntax**	**PIN required**	**Settings saved**	**Can be aborted**	**Response time**	**Error reference**
	partial	Yes	No	No	Up to 1 s	+CME Error

7.9.1 Description

Displays the network name accordingly to the selected <type>:

- If the requested information is not available (e.g. no SIM-files EF_{OPL} and EF_{PNN}), the command displays the network name which is most similar to the requested <type>
- If the requested name is the Service Provider Name (<type>= 7), a null string is displayed if not available
- In case EONS names are not available, NITZ names are displayed, if any
- In case no NITZ name is available, CPHS names are used
- In case no CPHS name is available, ROM PLMN names are displayed
- In case no ROM PLMN name matches to the current network, its numeric format (i.e. <type> 0) is returned

☞ The maximum expected response time could request about 1 s if the data are read by the SIM.

☞ The set command provides an error result code ("no network service") when the module is registered only to a PS (Packet Switched) network operator. Issue a +UCGOPS read command to retrieve the Registered PLMN in case the module is PS only attached due to SIM subscription restrictions.

7.9.2 Syntax

Type	Syntax	Response	Example
Set	AT+UDOPN=<type>	+UDOPN: <type>[,<name>[,<display_condition>]] OK	AT+UDOPN=4 +UDOPN: 4,"Main Network" OK
			AT+UDOPN=7 +UDOPN: 7,"SERVICE-PROVIDER",1 OK
			AT+UDOPN=7 +UDOPN: 7,"" OK
Test	AT+UDOPN=?	+UDOPN: (list of supported <type>s) OK	+UDOPN: (0-9) OK

7.9.3 Defined values

Parameter	Type	Description
<type>	Number	• 0: numeric format of MCC/MNC network (three BCD digit country code and two/three BCD digit network code) • 1: short name in ROM • 2: long name in ROM • 3: short network operator name (CPHS) • 4: long network operator name (CPHS) • 5: short NITZ name • 6: full NITZ name • 7: service provider name • 8: EONS short operator name • 9: EONS long operator name • 11: short network operator name • 12: long network operator name • 13: numeric format of network MCC/MNC even in limited service
<name>	String	• MCC/MNC code for <type>= 0 or 13 • Corresponding network name for <type>= 1, 2, 3, 4, 5, 6, 8, 9, 11 or 12 • Service provider name followed by <display_condition> for <type>=7
<display_condition>	Number	Display condition as stored on SIM for the service provider name in respect to the registered PLMN (see 3GPP TS 51.011 [18] for more details).

7.9.4 Notes

- EONS means Enhanced Operator Name from SIM-files EF_{OPL} and EF_{PNN}.
- The coding of <name> is according to the +CSCS setting.

TOBY-L2 / MPCI-L2

- <type>=13 is not supported.
- The NITZ name (<type>=5 or 6) does not provide significant information.

SARA-U2 / LISA-U2 / LISA-U1

- <type>=13 is not supported.

SARA-G3 / LEON-G1

- <type>=11, <type>=12 and <type>=13 are not supported.

7.10 Preferred PLMN list selection +CPLS

+CPLS						
Modules	TOBY-L4 TOBY-L2 MPCI-L2					
	LARA-R2 TOBY-R2					
	SARA-U2 LISA-U2 LISA-U1					
Attributes	**Syntax**	**PIN required**	**Settings saved**	**Can be aborted**	**Response time**	**Error reference**
	full	No	No	No	-	+CME Error

7.10.1 Description

Selects one PLMN selector with Access Technology list in the SIM card or active application in the UICC (GSM or USIM), that is used by +CPOL command.

The set command selects a list in the SIM/USIM. The read command returns the selected PLMN selector list from the SIM/USIM.

The test command returns the whole index range supported lists by the SIM/USIM.

7.10.2 Syntax

Type	Syntax	Response	Example
Set	AT+CPLS=<list>	OK	AT+CPLS=1 OK
Read	AT+CPLS?	+CPLS: <list> OK	+CPLS: 1 OK
Test	AT+CPLS=?	+CPLS: (list of supported <list>s) OK	+CPLS: (0-2) OK

7.10.3 Defined values

Parameter	Type	Description
<list>	Number	• 0 (factory-programmed and default value): user controlled PLMN selector with Access Technology $EF_{PLMNwAcT}$, if not found in the SIM/UICC then PLMN preferred list $EF_{PLMNsel}$ (this file is only available in SIM card or GSM application selected in UICC); these files can be read and updated (see the 3GPP TS 31.102 [19]). • 1: operator controlled PLMN selector with Access Technology $EF_{OPLMNwAcT}$; this file can be read only (see the 3GPP TS 31.102 [19]). • 2: HPLMN selector with Access Technology $EF_{HPLMNwAcT}$; this file can be read only (see the 3GPP TS 31.102 [19]).

7.10.4 Notes

LARA-R2 / TOBY-R2 / SARA-U2 / LISA-U2 / LISA-U1

- The set command can be issued also omitting the <list> parameter.

7.11 PS operator selection +UCGOPS

+UCGOPS						
Modules	TOBY-L2 MPCI-L2					
	SARA-U2 LISA-U2 LISA-U1					
	SARA-G3 LEON-G1					
Attributes	**Syntax**	**PIN required**	**Settings saved**	**Can be aborted**	**Response time**	**Error reference**
	partial	Yes	No	No	Up to 3 min	+CME Error

7.11.1 Description

Forces an attempt to select and register on the PS (Packet Switched) network operator either automatically selected by the MT, or manually specified by the user.

The read command returns the network on which the MT is PS attached to, if any.

The test command returns a list of the available networks, specifying if they are forbidden and if PS is supported.

The command in the execution syntax can be aborted if a character is sent to the DCE during the command execution. If the automatic selection is set (<mode>=0), the other parameters must be omitted.

7.11.2 Syntax

Type	Syntax	Response	Example
Set	AT+UCGOPS=[<mode>[,<format>[,<oper>[,<AcT>]]]]	OK	AT+UCGOPS=0 OK AT+UCGOPS=1,2,"22201" OK
Read	AT+UCGOPS?	+UCGOPS: <status>[,<format>,<oper>,<AcT>] OK	+UCGOPS: 1,2,"22210",0 OK
Test	AT+UCGOPS=?	+UCGOPS: [(<stat>,long alphanumeric <oper>, short alphanumeric <oper>, numeric <oper>,[<AcT>,]<ps_availability>)],,(list of supported <mode>s),(list of supported <format>s) OK	+UCGOPS: (1,"vodafone IT","voda IT","22210",1),(3,"I TIM","TIM","22201",1),(3,"I WIND","I WIND","22288",1),,(0-1),(0-2) OK

7.11.3 Defined values

Parameter	Type	Description
<mode>	Number	Specified whether the operator selection is done automatically by the MT or is manually bound to a specific network • 0 (default value): automatic (<oper> field is ignored) • 1: manual
<format>	Number	Mandatory parameter if <mode> value is 1, it specifies the format of the network operator name • 0 (default value): long alphanumeric <oper> • 1: short format alphanumeric <oper> • 2: numeric <oper>
<oper>	String	String type given in format <format>; this field may be up to 16 character long for long alphanumeric format, up to 8 characters for short alphanumeric format and 5 characters long for numeric format (MCC/MNC codes); this parameter is mandatory if <mode> value is 1
<stat>	Number	PLMN status attribute with respect to the MT • 0: unknown • 1: available • 2: current • 3: forbidden
<ps_availability>	Number	GPRS availability • 0: not supported • 1: supported
<AcT>	Number	Indicates the radio access technology • 0: GSM • 1: GSM COMPACT • 2: UTRAN (UMTS) • 3: GSM with EDGE availability • 4: UTRAN with HSDPA availability • 5: UTRAN with HSUPA availability • 6: UTRAN with HSDPA and HSUPA availability • 7: LTE
<status>	Number	Current GPRS registration status and PLMN selection mode of the MT • 0: attached, automatic PLMN selection mode • 1: attached, manual PLMN selection mode

Parameter	Type	Description
		• 2: detached

7.11.4 Notes

TOBY-L2 / MPCI-L2

- The test command triggers a network search only when the MT is in class "CG" or detached from the network (i.e. +COPS: 2). If the MT is in class "B", the test command will immediately return an error result code.
- The test commands will return only packet-switched capable 2G/3G PLMNs and LTE PLMNs.

SARA-U2 / LISA-U2 / LISA-U1

- The <AcT> parameter can be set only to 0 and 2.

SARA-G3 / LEON-G1

- The <AcT> parameter is not supported.

7.12 Network registration status +CREG

+CREG						
Modules	All products					
Attributes	**Syntax**	**PIN required**	**Settings saved**	**Can be aborted**	**Response time**	**Error reference**
	partial	No	No	No	-	+CME Error

7.12.1 Description

Configures the network registration URC related to CS domain. Depending on the <n> parameter value, a URC can be issued:

- +CREG: <stat> if <n>=1 and there is a change in the MT's circuit switched mode network registration status in GERAN/UTRAN/E-UTRAN
- +CREG: <stat>[,<lac>,<ci>[,<AcTStatus>]] if <n>=2 and there is a change of the network cell in GERAN/UTRAN/E-UTRAN

The parameters <AcTStatus>, <lac>, <ci> are provided only if available.

The read command provides the same information issued by the URC together with the current value of the <n> parameter. The location information elements <lac>, <ci> and <AcTStatus>, if available, are returned only when <n>=2 and the MT is registered with the network.

☞ When <n>=2, in UMTS RAT, unsolicited location information can be received if the network sends the UTRAN INFORMATION MOBILITY message during dedicated connections; in the latter cases the reported <ci> might be not correct because the UE in DCH state cannot read broadcast system information before the change of serving cell. In contrast, in GSM RAT no unsolicited location information is received during a CS connection.

☞ The DTE application should set a reasonable timer (10 s) when receiving the +CREG: 3 URC, since this might be due to the fact that the LTE registration was rejected (SIM not enabled for LTE RAT, wrong APN during the initial default bearer setup in the EPS attach procedure and other temporary reject causes).

☞ If the MT also supports GPRS services and/or EPS services in E-UTRAN, the +CGREG / +CEREG set and read command result codes apply to the registration status and location information for those services.

7.12.2 Syntax

Type	Syntax	Response	Example
Set	AT+CREG=[<n>]	OK	AT+CREG=1 OK
Read	AT+CREG?	+CREG: <n>,<stat>[,<lac>,<ci>[,<AcTStatus>]] OK	+CREG: 0,0 OK
Test	AT+CREG=?	+CREG: (list of the supported <n>s) OK	+CREG: (0-2) OK

Type	Syntax	Response	Example
URC		+CREG: <stat>[,<lac>,<ci>[,<AcTStatus>]]	+CREG: 1,"4E54","44A5"

7.12.3 Defined values

Parameter	Type	Description
<n>	Number	• 0 (default value and factory-programmed value): network registration URC disabled • 1: network registration URC +CREG: <stat> enabled • 2: network registration and location information URC +CREG: <stat>[,<lac>,<ci>[,<AcTStatus>]] enabled
<stat>	Number	• 0: not registered, the MT is not currently searching a new operator to register to • 1: registered, home network • 2: not registered, but the MT is currently searching a new operator to register to • 3: registration denied • 4: unknown (e.g. out of GERAN/UTRAN/E-UTRAN coverage) • 5: registered, roaming • 6: registered for "SMS only", home network (applicable only when <AcTStatus> indicates E-UTRAN) • 7: registered for "SMS only", roaming (applicable only when <AcTStatus> indicates E-UTRAN) • 9: registered for "CSFB not preferred", home network (applicable only when <AcTStatus> indicates E-UTRAN) • 10: registered for "CSFB not preferred", roaming (applicable only when <AcTStatus> indicates E-UTRAN)
<lac>	String	Two bytes location area code or tracking area code (if <AcTStatus>=7) in hexadecimal format (e.g. "00C3"). The value FFFF means that the current <lac> value is invalid.
<ci>	String	From 2 to 4 bytes cell ID in hexadecimal format (e.g. "A13F" or "129080B"). The value FFFFFFFF means that the current <ci> value is invalid.
<AcTStatus>	Number	Indicates the radio access technology • 0: GSM • 1: GSM COMPACT • 2: UTRAN • 3: GSM with EDGE availability • 4: UTRAN with HSDPA availability • 5: UTRAN with HSUPA availability • 6: UTRAN with HSDPA and HSUPA availability • 7: E-UTRAN • 255: the current <AcTStatus> value is invalid

7.12.4 Notes

The following is an overview of the values assumed by the <stat> parameter:

- 0: a technical problem could have occurred, the user is requested to intervene. It is still possible to make emergency calls if some network is available. Possible causes:
  - PIN not entered
  - Invalid HPLMN found on the SIM (SIM read error)
  - SIM card not present

  The registration is not started
- 1: the MT is registered for circuit-switched services on the HPLMN (or on one of the equivalent HPLMN's, whose list is provided by the SIM)
- 2: the module is searching a network to register on. Possible causes:
  - No network available
  - Available networks have insufficient Rx level
  - HPLMN or allowed PLMN are available but the registration is rejected, e.g. roaming is not allowed in this Location Area

  It is still possible to make emergency calls if network coverage is available
- 3: the CS registration failed after a Location Update Reject; possible causes are:

  - Illegal MS
  - Illegal ME
  - IMSI unknown at HLR
  - PLMN not allowed
  - Location area not allowed
  - Roaming not allowed in this location area
  - Network failure
  - Network congestion

  It is still possible to make emergency calls if network coverage is available.

  If the registration type is manual, then no further attempt is made to search for a new PLMN or register with it. If the registration type is automatic, the MS may look for an allowed PLMN if the rejection cause was roaming restriction. In case of illegal MS /ME, there could be possible problems with either the SIM card or with the ME's identity (IMEI): user intervention may be required
- 4: this value, usually transitory, is returned if the registration state does not belong to any of the following:
  - Normal
  - Limited
  - No service
  - Service detached
  - Service disabled

  It may be issued after the failure of a registration procedure, before starting a PLMN search, when <stat>=2.
- 5: the MT is registered for circuit-switched services on a VPLMN, in national or international roaming
- 6: in LTE, the MT is registered only for the SMS circuit-switched service on the HPLMN (ore on one of the equivalent HPLMN's)

☞ TOBY-L200-00S / TOBY-L210-00S / TOBY-L210-60S / MPCI-L200-00S / MPCI-L210-00S / MPCI-L210-60S
Being SMS, the only non-EPS service supported by these modules, this status is equivalent to 1.

- 7: in LTE, the MT is registered only for the SMS circuit-switched service on a VPLMN, in national or international roaming

☞ TOBY-L200-00S / TOBY-L210-00S / TOBY-L210-60S / MPCI-L200-00S / MPCI-L210-00S / MPCI-L210-60S
Being SMS, the only non-EPS service supported by these modules, this status is equivalent to 5.

TOBY-L4

- The URC does not notify access technology information changes that might change in polling; see the +UREG AT command to monitor the RAT changes.

TOBY-L2 / MPCI-L2

- The information text response to the read command and the URC will assume these values in these conditions:
  - During the initial network searching at the module power-on, the <stat> parameter is 2
  - If the module is CS attached to the GSM/UTRAN/E-UTRAN home network, the <stat> parameter is 1
  - In the out of coverage state, the <stat> parameter is 2

TOBY-L200-00S / TOBY-L210-00S / TOBY-L210-60S / MPCI-L200-00S / MPCI-L210-00S / MPCI-L210-60S

- <stat>=9 and 10 are not supported.

TOBY-L220-62S / MPCI-L220-62S

- <AcTStatus>=0, 1, 2, 3, 4, 5, 6 are not supported.

SARA-U2 / LISA-U2 / LISA-U1

- <AcTStatus>=7 is not supported.

LISA-U1

- The <AcTStatus> parameter is not supported.

SARA-G4 / SARA-G3 / LEON-G1

- If GPRS is enabled and +CREG and +CGREG URCs are both enabled too, once the module is registered and attached then the two URCs are sent out quite at the same time.
- <AcTStatus> parameter is not supported.

SARA-G300 / SARA-G310 / SARA-G340-00S / SARA-G340-01S / SARA-G350-00S / SARA-G350-00X / SARA-G350-01B / SARA-G350-01S / LEON-G1

- Equivalent HPLMN for <stat>=1 is not supported: <stat>=5 is indicated in this case.

7.13 HSDPA/HSUPA mode configuration +UHSDUPA

+UHSDUPA						
Modules	TOBY-L4 TOBY-L200 TOBY-L201 TOBY-L210 TOBY-L220-02S TOBY-L280 MPCI-L200 MPCI-L201 MPCI-L210 MPCI-L220-02S MPCI-L280					
	LARA-R202 LARA-R280 TOBY-R2					
	SARA-U2 LISA-U2 LISA-U1					
Attributes	**Syntax**	**PIN required**	**Settings saved**	**Can be aborted**	**Response time**	**Error reference**
	partial	No	NVM	No	-	+CME Error

7.13.1 Description

Enables / disables the HSDPA and HSUPA also configuring the related data rate. The settings are saved in the NVM at the module power off; the new configuration will be effective at the next power on.

☞ u-blox cellular modules are certified according to all the capabilities and options stated in the Protocol Implementation Conformance Statement document (PICS) of the module. The PICS, according to 3GPP TS 51.010-2 [84], 3GPP TS 34.121-2 [85], 3GPP TS 36.521-2 [115] and 3GPP TS 36.523-2 [116], is a statement of the implemented and supported capabilities and options of a device. If the user changes the command settings during the certification process, the PICS of the application device integrating a u-blox cellular module must be changed accordingly.

7.13.2 Syntax

Type	Syntax	Response	Example
Set	AT+UHSDUPA=<HSDPA-mode>,<HS-DSCH_category>[,<HSUPA-mode>[,<E-DCH_category>]]	OK	AT+UHSDUPA=1,8,1,6 OK
Read	AT+UHSDUPA?	+UHSDUPA: <HSDPA-mode>,<HS-DSCH_category>,<HSUPA-mode>,<E-DCH_category> OK	+UHSDUPA: 1,8,1,6 OK
Test	AT+UHSDUPA=?	+UHSDUPA: (<list of supported <HSDPA-mode>s),(<list of supported <HS-DSCH_category>s>),(<list of supported <HSUPA-mode>s),(<list of supported>,<E-DCH_category>s) OK	+UHSDUPA: (0-1),(6,8,10,12,13,14),(0,1),(1,2,6) OK

7.13.3 Defined values

Parameter	Type	Description
<HSDPA-mode>	Number	• 0: HSDPA off • 1 (default and factory-programmed value): HSDPA on
<HS-DSCH_category>	Number	Integer value representing the HS-DSCH category as defined in 3GPP TS 25.306 [53]: • TOBY-L4 - Allowed values: 6, 8, 10, 12, 13, 14, 15, 16, 17, 18, 19, 20, 21, 22, 23, 24. The factory-programmed value is 24. • TOBY-L200 / TOBY-L201 / MPCI-L200 / MPCI-L201 - Allowed values: 8, 14. The factory-programmed value is 14. • TOBY-L210 / TOBY-L220-02S / TOBY-L280 / MPCI-L200 / MPCI-L220-02S / MPCI-L280 - Allowed values: 8, 14, 24. The factory-programmed value is 24.

Parameter	Type	Description
		• LARA-R2 / TOBY-R2 / SARA-U2 / LISA-U200 / LISA-U260 / LISA-U270 / LISA-U1 - Allowed values: 6, 8. The factory-programmed value is 8. • LISA-U230 - Allowed values: 6, 8, 10, 12, 13, 14. The default value is 14.
<HSUPA-mode>	Number	• 0: HSUPA off • 1 (default and factory-programmed value): HSUPA on
<E-DCH_category>	Number	Integer value representing the E-DCH category as defined in 3GPP TS 25.306 [53]: • TOBY-L4 / LARA-R2 / TOBY-R2 - Allowed values: 1, 2, 6. The factory-programmed value is 6. • TOBY-L2 / MPCI-L2 - Allowed values: 5, 6. The factory-programmed value is 6. • SARA-U2 / LISA-U2 - Allowed values: 1, 2, 4, 6. The factory-programmed value is 6. • SARA-U260-00S / SARA-U270-00S / SARA-U270-00X / SARA-U280-00S / LISA-U200-01S / LISA-U200-02S / LISA-U200-52S / LISA-U200-62S / LISA-U230 / LISA-U260 / LISA-U270 - Allowed values: 1, 2, 6. The factory-programmed value is 6. • LISA-U1 - Allowed values: 1, 2, 4, 5, 6. The factory-programmed value is 6.

7.14 Preferred operator list +CPOL

+CPOL						
Modules	All products					
Attributes	**Syntax**	**PIN required**	**Settings saved**	**Can be aborted**	**Response time**	**Error reference**
	partial	Yes	No	No	< 10 s	+CME Error

7.14.1 Description

Edits the user preferred list of networks in the active application on the UICC (GSM or USIM) or preferred list of networks in the SIM card.

The command accesses the list of preferred PLMNs previously selected by +CPLS, if implemented. If +CPLS is not implemented the command tries to access $EF_{PLMNwAcT}$ and if this file is not present and a UICC GSM application is selected or a SIM card is used then the $EF_{PLMNsel}$ file is accessed.

The set command writes an entry in the selected list. When an entry is added to +CPOL list, it should have a correspondence in the ROM PLMN names returned by the +COPN command. If <index> is given but <oper> is left out, the entry is deleted. If only <format> is given, the <oper> format in the read command is changed. The <GSM_AcT>, <GSM_Compact_AcT>, <UTRAN_AcT> and <E-UTRAN_AcT> parameters are required when writing user controlled PLMN selector with Access Technology ($EF_{PLMNwAcT}$).

The read command returns all used entries from the SIM list of preferred PLMNs and the Access Technologies for each PLMN in the list where provided.

If a new PLMN is added in a different format than the one previously set, the <format> parameter always switches to the last used.

☞ If in the +COPN list there are more than one PLMN with the same name in alphanumeric (short or long) format, the numeric format shall be used to add this PLMN <entry> in the +CPOL list; otherwise the result will be unpredictable.

7.14.2 Syntax

Type	Syntax	Response	Example
Set	AT+CPOL=[<index>][,<format>[,<oper>[,<GSM_AcT>,<GSM_Compact_AcT>,<UTRAN_AcT>[,<E-UTRAN_AcT>]]]]	OK	AT+CPOL=2,0,"I WIND",1,0,1 OK
Read	AT+CPOL?	+CPOL: <index1>,<format>,<oper1>[,<GSM_AcT1>,<GSM_Compact_AcT1>,<UTRAN_AcT1>[,<E-UTRAN_AcT>]] [+CPOL: <index2>,<format>,<oper2>[,<GSM_AcT2>,<GSM_Compact_AcT2>,<UTRAN_AcT2>[,<E-UTRAN_AcT>]]...]	+CPOL: 1,0,"F SFR",1,0,1 +CPOL: 2,0,"TIM I",1,0,1 OK

Type	Syntax	Response	Example
		OK	
Test	AT+CPOL=?	+CPOL: (list of supported<index>s), (list of supported <format>s) OK	+CPOL: (1-30),(0-2) OK

7.14.3 Defined values

Parameter	Type	Description
<index> / <indexn>	Number	Represents the order number of operator in the SIM preferred operator list
<format>	Number	See also +COPS command description • 0: long format alphanumeric <oper> • 1: short format alphanumeric <oper> • 2 (default value): numeric <oper>
<oper> / <opern>	String	Format indicated by <format>
<GSM_AcT>	Number	GSM access technology. Allowed values: • 0: access technology not selected • 1: access technology selected
<GSM_Compact_AcT>	Number	GSM compact access technology. Allowed values: • 0: access technology not selected • 1: access technology selected
<UTRAN_AcT>	Number	UTRA access technology. Allowed values: • 0: access technology not selected • 1: access technology selected
<E-UTRAN_AcT>	Number	E-UTRAN access technology • 0: access technology not selected • 1: access technology selected

7.14.4 Notes

TOBY-L2 / MPCI-L2

- When an entry is deleted the subsequent entries are shifted up of one position.
- The <oper> format in the read command is always changed when the <format> parameter is given.

TOBY-L200-02S / TOBY-L200-03A / TOBY-L200-03S / TOBY-L210-02S / TOBY-L210-03A / TOBY-L210-03S / TOBY-L210-62S / TOBY-L220 / TOBY-L280 / MPCI-L200-02S / MPCI-L200-03S / MPCI-L210-02S / MPCI-L210-03S / MPCI-L220 / MPCI-L280

- If the module is not registered (+COPS=2), the set command returns an error result code.
- To modify an already inserted entry (whose order number is <index>), delete the original entry and insert the new one with the same <index>.
- When inserting a new entry, it is possible to set to 1 only one "access technology" parameter: <GSM_AcT> or <GSM_Compact_AcT> or <UTRAN_AcT> or <E-UTRAN_AcT>.

SARA-U2 / LISA-U2 / LISA-U1

- The <E-UTRAN_AcT> parameter is not supported.
- The default value of <format> parameter is 0 (long format alphanumeric <oper>).
- The <oper> format in the read command is always changed when the <format> parameter is given.

SARA-G4 / SARA-G3 / LEON-G1

- <GSM_AcT>, <GSM_Compact_AcT>, <UTRAN_AcT> and <E-UTRAN_AcT> parameters are not supported.
- The default value of <format> parameter is 0 (long format alphanumeric <oper>).
- The <oper> format in the read command is always changed when the <format> parameter is given.
- If the network operator is not present in the SIM list of preferred PLMNs, then the information text response to the read command will display the PLMN in the short format alphanumeric format.

7.15 Read operator names +COPN

+COPN						
Modules	All products					
Attributes	Syntax	PIN required	Settings saved	Can be aborted	Response time	Error reference
	full	Yes	No	No	-	+CME Error

7.15.1 Description

Returns the list of operator names from the MT. Each operator code <numeric n> that has an alphanumeric equivalent <alpha n> in the MT memory shall be returned.

7.15.2 Syntax

Type	Syntax	Response	Example
Action	AT+COPN	+COPN: <numeric 1>,<alpha1> [+COPN: <numeric2>,<alpha2> [...]] OK	+COPN: "21901","T-Mobile HR" +COPN: "21910","HR VIP" +COPN: "22201","I TIM" +COPN: "22210","vodafone IT" OK
Test	AT+COPN=?	OK	OK

7.15.3 Defined values

Parameter	Type	Description
<numeric n>	String	Operator in numeric format (see +COPS AT command)
<alpha n>	String	Operator in long alphanumeric format (see +COPS AT command)

7.15.4 Notes

TOBY-L2 / MPCI-L2

- In case the module is not registered to the network (+COPS: 2) the action command provides an error result code.

SARA-G4

- The PIN insertion is not mandatory before the command execution.

7.16 Network emergency bearer services support +CNEM

+CNEM						
Modules	TOBY-L4					
	LARA-R202 LARA-R203 LARA-R204 LARA-R211 TOBY-R2					
Attributes	Syntax	PIN required	Settings saved	Can be aborted	Response time	Error reference
	partial	No	NVM	No	-	+CME Error

7.16.1 Description

Configures sending of URCs from MT to the TE, in case of changes in the emergency bearer services support.

7.16.2 Syntax

Type	Syntax	Response	Example
Set	AT+CNEM=[<reporting>]	OK	AT+CNEM=1 OK
Read	AT+CNEM?	+CNEM: <reporting>,<emb_lu_supp>,<emb_S1_supp> OK	+CNEM: 1,0,1 OK
Test	AT+CNEM=?	+CNEM: (list of supported <reporting>s)	+CNEM: (0,1) OK

Type	Syntax	Response	Example
		OK	
URC		+CNEMIU: <emb_Iu_supp>	+CNEMIU: 0
URC		+CNEMS1: <emb_S1_supp>	+CNEMS1: 1

7.16.3 Defined values

Parameter	Type	Description
<reporting>	Number	Reporting configuration: • 0 (default and factory programmed value): URCs disabled • 1: URCs enabled
<emb_Iu_supp>	Number	Emergency bearer services support indicator for Iu mode (see Notes): • 0: emergency bearer services in Iu mode and A/Gb mode not supported
<emb_S1_supp>	Number	Emergency bearer services support indicator for S1 mode (see Notes): • 0: emergency bearer services in S1 mode not supported • 1: emergency bearer services in S1 mode supported

7.16.4 Notes

- The command needs the SIM card to work correctly.
- The indicators <emb_Iu_supp> and <emb_S1_supp> are only set to supported when explicitly signalled from the network. When an emergency bearer services support indicator is not signalled from the network or if no network is available, this is interpreted as "emergency bearer services not supported".

TOBY-L4 / LARA-R2 / TOBY-R2

- The AT command setting is not saved in NVM.

7.17 Steering of Roaming configuration +UDCONF=20

+UDCONF=20						
Modules	LARA-R211					
	SARA-U2 LISA-U200-01S LISA-U200-02S LISA-U200-03S LISA-U200-52S LISA-U200-62S LISA-U200-83S LISA-U201 LISA-U230 LISA-U260 LISA-U270					
	SARA-G3 LEON-G100-07S LEON-G100-08S					
Attributes	**Syntax**	**PIN required**	**Settings saved**	**Can be aborted**	**Response time**	**Error reference**
	full	No	NVM	No	-	+CME Error

7.17.1 Description

Enables / disables the Steering of Roaming feature.

The setting can be changed only when the module is not registered to, and not searching for, a network (i.e. when +CREG's <stat> is 0). The new setting is saved in NVM and takes place at the next network registration / search.

7.17.2 Syntax

Type	Syntax	Response	Example
Set	AT+UDCONF=20,<SoR_enable>	OK	AT+UDCONF=20,1 OK
Read	AT+UDCONF=20	+UDCONF: 20,<SoR_enable> OK	AT+UDCONF=20 +UDCONF: 20,1 OK

7.17.3 Defined values

Parameter	Type	Description
<SoR_enable>	Number	Enables / disables the Steering of Roaming feature: • 0: Steering of Roaming disabled • 1 (factory-programmed value): Steering of Roaming enabled

Parameter	Type	Description
		• 2: Steering of Roaming enabled with automatic switch from manual to automatic PLMN selection mode if the maximum number of registration attempts rejected with cause 17 (Network Failure) has been reached)

7.17.4 Notes

LARA-R211

- The command is not supported by LARA-R211-02B-00.

SARA-U260-00S / SARA-U270-00S / SARA-U270-00X / SARA-U280-00S / LISA-U200-01S / LISA-U200-02S / LISA-U200-52S / LISA-U200-62S / LISA-U230 / LISA-U260 / LISA-U270

- <SoR_enable>=2 is not supported.

SARA-U270-53S

- The factory-programmed value of <SoR_enable> parameter is 0.

SARA-G3 / LEON-G1

- The factory-programmed value of <SoR_enable> parameter is 0.
- <SoR_enable>=2 is not supported.

7.18 Fast Dormancy activation +UFDAC

+UFDAC						
Modules	TOBY-L4 TOBY-L200 TOBY-L201 TOBY-L210 TOBY-L220-02S TOBY-L280 MPCI-L200 MPCI-L201 MPCI-L210 MPCI-L220-02S MPCI-L280					
	LARA-R202 LARA-R280 TOBY-R2					
	SARA-U2 LISA-U200-02S LISA-U200-03S LISA-U200-52S LISA-U200-62S LISA-U200-83S LISA-U201 LISA-U260-02S LISA-U270-02S LISA-U270-62S LISA-U270-63S LISA-U270-68S					
Attributes	**Syntax**	**PIN required**	**Settings saved**	**Can be aborted**	**Response time**	**Error reference**
	full	No	NVM	No	-	+CME Error

7.18.1 Description

Activates or deactivates the autonomous Fast Dormancy or triggers a single Fast Dormancy request depending on the specified mode. If all the constraints are satisfied a Signaling Connection Release Indication (SCRI) is sent to the network. There is no final confirmation if the SCRI was sent to the network, i.e. the "OK" final result code only indicates that the command's syntax has been fulfilled.

7.18.2 Syntax

Type	Syntax	Response	Example
Set	AT+UFDAC=[[<FD_mode>][,<FD_Delay_Timer_duration>[,<FD_Inhibit_Timer_duration>]]]	OK	AT+UFDAC=1 OK
Read	AT+UFDAC?	+UFDAC: <FD_mode>,<FD_Delay_Timer_duration>,<FD_Inhibit_Timer_duration> OK	+UFDAC: 3,5,5 OK
Test	AT+UFDAC=?	+UFDAC: (list of the supported <FD_mode>s),(list of the supported <FD_Delay_Timer_duration>s),(list of the supported <FD_Inhibit_Timer_duration>s) OK	+UFDAC: (1-3),(1-60),(0,1-120) OK

7.18.3 Defined values

Parameter	Type	Description
<FD_mode>	Number	Indicates the action to perform: • 1: one shot SCRI transmission request (application-driven FD) • 2: activate automatic SCRI transmission request (autonomous FD)

Parameter	Type	Description
		• 3 (factory-programmed value): deactivate automatic SCRI transmission request If omitted, only the delay and inhibit timer values are saved and no other action is performed.
<FD_Delay_Timer_duration>	Number	Delay Timer duration in seconds, range 1-60. The factory-programmed value is 5. The Delay Timer is used for the autonomous FD (<FD_mode>=2). When the module is in connected mode with no data available on the user plane this timer starts running. At its expiry, the evaluation for the SCRI transmission is done.
<FD_Inhibit_Timer_duration>	Number	Inhibit Timer duration in seconds, range 1-120 (the value 0 disables the Inhibit Timer). The factory-programmed value is 5. The Inhibit Timer is an extension of T323. If the network supports 3GPP R8 Fast Dormancy, the Inhibit Timer and T323 are the same and thus the timer's duration is network specified. Otherwise the value <FD_Inhibit_Timer_duration> is used.

7.18.4 Notes

- The Fast Dormancy feature is available only in UMTS RAT.
- The set command updates the <FD_Delay_Timer_duration> and <FD_Inhibit_Timer_duration> values stored in NVM, if they are specified; otherwise the values previously stored in NVM are used.
- If automatic SCRI transmission request is active, one shot SCRI transmission requests are ignored.
- The constraints to be satisfied before sending a SCRI are:
  - No 'relevant' RRC procedure is ongoing
  - Inhibit Timer is not running
  - No NAS signaling is ongoing
  - No data on the user plane was transferred during the last <FD_Delay_Timer_duration> seconds

LISA-U270-62S / LISA-U270-63S / LISA-U270-68S

- The <FD_mode> factory-programmed value is 2.
- The <FD_Delay_Timer_duration> and <FD_Inhibit_Timer_duration> are set respectively to 7 and 120 and cannot be modified by means of AT commands.

7.19 Fast Dormancy configuration +UDCONF=61

+UDCONF=61						
Modules	TOBY-L200 TOBY-L201 TOBY-L210 TOBY-L220-02S TOBY-L280 MPCI-L200 MPCI-L201 MPCI-L210 MPCI-L220-02S MPCI-L280					
	SARA-U2 LISA-U200-02S LISA-U200-03S LISA-U200-52S LISA-U200-62S LISA-U200-83S LISA-U201 LISA-U260-02S LISA-U270-02S LISA-U270-62S LISA-U270-63S LISA-U270-68S					
Attributes	**Syntax**	**PIN required**	**Settings saved**	**Can be aborted**	**Response time**	**Error reference**
	full	No	NVM	No	-	+CME Error

7.19.1 Description

Configures the Fast Dormancy modes.

7.19.2 Syntax

Type	Syntax	Response	Example
Set	AT+UDCONF=61,<FD_conf>	OK	AT+UDCONF=61,1 OK
Read	AT+UDCONF=61	+UDCONF: 61,<FD_conf> OK	AT+UDCONF=61 +UDCONF: 61,2 OK

7.19.3 Defined values

Parameter	Type	Description
<FD_conf>	Number	Specifies which <FD_mode>'s values are allowed in the +UFDAC AT command. If a not allowed <FD_mode> value is issued, +UFDAC will display the error result code "+CME ERROR: operation not allowed": • 0: values 1 and 2 are not allowed in <FD_mode> • 1: value 2 is not allowed in <FD_mode> • 2 (factory-programmed value): all the <FD_mode> values are allowed

7.20 Network selection control +PACSP

+PACSP						
Modules	TOBY-L4 TOBY-L2 MPCI-L2					
	LARA-R2 TOBY-R2					
	SARA-U2 LISA-U2 LISA-U1					
Attributes	Syntax	PIN required	Settings saved	Can be aborted	Response time	Error reference
	full	No	No	No	-	+CME Error

7.20.1 Description

If the EF_{CSP} (Customer Service Profile) is available the +PACSP URC is provided in the following cases:

- TOBY-L4 / TOBY-L2 / MPCI-L2 / LARA-R2 / TOBY-R2 / SARA-U2 / LISA-U2 / LISA-U1 - at the module boot time
- TOBY-L4 / TOBY-L2 / MPCI-L2 / LARA-R2 / TOBY-R2 / SARA-U2 / LISA-U2 / LISA-U1 - whenever the SIM/USIM issues the REFRESH proactive command related to the EF_{CSP}

For further information, see the AT&T Device Requirements [61].

☞ The EF_{CSP} is available on SIM/USIM cards from AT&T mobile network operator.

☞ TOBY-L4 / TOBY-L2 / MPCI-L2 / LARA-R2 / TOBY-R2 / SARA-U2 / LISA-U2 / LISA-U1
The command allows checking whether the EF_{CSP} (Customer Service Profile) is available on the SIM/USIM card and, if available, what is the value of the PLMN mode bit; otherwise an error result code is provided ("+CME ERROR: operation not allowed" if +CMEE is set to 2).

☞ TOBY-L4 / TOBY-L2 / MPCI-L2 / LARA-R2 / TOBY-R2 / SARA-U2 / LISA-U2 / LISA-U1
This functionality will typically be used in cases where AT&T subscribers internationally travel, or if there is a need to enable manual network selection functionality.

7.20.2 Syntax

Type	Syntax	Response	Example
Read	AT+PACSP?	+PACSP<bit_value>	+PACSP1
		OK	OK
URC		+PACSP<bit_value>	+PACSP0

7.20.3 Defined values

Parameter	Type	Description
<bit_value>	Number	PLMN mode bit value: • 0: automatic network selection is forced (see Notes) • 1: network selection mode unchanged (see Notes)

7.20.4 Notes

- If EF_{CSP} is available, the PLMN mode bit forces the automatic network registration, according to the +COPS <mode> value which is loaded at boot from the selected profile (see the Appendix B.1 and &V). The following table explains the behavior:

Autoregistration <mode>	PLMN mode bit <bit_value>	Autoregistration behavior
0	0	Automatic network selection
1	0	Automatic network selection
2	0	Disabled

Autoregistration <mode>	PLMN mode bit <bit_value>	Autoregistration behavior
0	1	Automatic network selection
1	1	Manual network selection (search for the PLMN stored in the selected profile)
2	1	Disabled

7.21 Integrity check on test networks configuration +UDCONF=81

+UDCONF=81						
Modules	TOBY-L4 TOBY-L200-02S TOBY-L200-03A TOBY-L200-03S TOBY-L201 TOBY-L210-02S TOBY-L210-03A TOBY-L210-03S TOBY-L210-62S TOBY-L220 TOBY-L280 MPCI-L200-02S MPCI-L200-03S MPCI-L201 MPCI-L210-02S MPCI-L210-03S MPCI-L220 MPCI-L280					
	LARA-R2 TOBY-R2					
	SARA-U2 LISA-U200-02S LISA-U200-03S LISA-U200-52S LISA-U200-62S LISA-U200-83S LISA-U201 LISA-U260-02S LISA-U270-02S LISA-U270-62S LISA-U270-63S LISA-U270-68S					
Attributes	Syntax	PIN required	Settings saved	Can be aborted	Response time	Error reference
	partial	No	NVM	No	-	+CME Error

7.21.1 Description

Configures the integrity check on 3G/4G test networks.

☞ Integrity check on 3G/4G test networks shall be disabled only when the authentication and integrity are disabled on the 3G/4G test network on which the module will be registered.

☞ Configure the network simulator with a PLMN not present in the ROM PLMN list (+COPN).

☞ Disabling integrity and security will not affect IMS, thus the command cannot be used when using IMS.

7.21.2 Syntax

Type	Syntax	Response	Example
Set	AT+UDCONF=81,<integrity_check_enabled>	OK	AT+UDCONF=81,0 OK
Read	AT+UDCONF=81	+UDCONF: 81,<integrity_check_enabled> OK	AT+UDCONF=81 +UDCONF: 81,1 OK

7.21.3 Defined values

Parameter	Type	Description
<integrity_check_enabled>	Number	Integrity check on 3G/4G test networks configuration. Allowed values: • 0: integrity check on test networks disabled (MCC/MNC not available in +COPN set command's response) • 1 (factory-programmed value): integrity check on test networks enabled (MCC/MNC not available in +COPN set command's response)

7.21.4 Notes

TOBY-L4 / TOBY-L2 / MPCI-L2 / LARA-R2 / TOBY-R2 / SARA-U2 / LISA-U2

- The command setting is not stored in the NVM.

7.22 Select band +UBANDSEL

+UBANDSEL						
Modules	TOBY-L2 MPCI-L2					
	LARA-R2 TOBY-R2					
	SARA-U2 LISA-U2 LISA-U1					
	SARA-G4 SARA-G3 LEON-G1					
Attributes	**Syntax**	**PIN required**	**Settings saved**	**Can be aborted**	**Response time**	**Error reference**
	full	No	NVM	No	-	+CME Error

7.22.1 Description

Allows switching from the automatic band selection to the selection of one or more (up to four) bands from the following:

- 2G network
  - 850 MHz
  - 900 MHz
  - 1800 MHz
  - 1900 MHz
- 3G and 4G network
  - 700 MHz (band 12, band 13, band 17, band 28)
  - 800 MHz (band 6, band 19, band 20)
  - 850 MHz (band 5)
  - 900 MHz (band 8)
  - 1500 MHz (band 11)
  - 1700 MHz (band 4)
  - 1800 MHz (band 3)
  - 1900 MHz (band 2)
  - 2100 MHz (band 1)
  - 2600 MHz (band 7)

☞ To make the setting effective, the module must be deregistered and registered again. (see Notes for the procedure to enter the detach state).

☞ The MT will camp on a cell, if suitable, belonging to one of the selected band; the OK final result code is not related to the result of the camping on the new cell.

☞ u-blox cellular modules are certified according to all the capabilities and options stated in the Protocol Implementation Conformance Statement document (PICS) of the module. The PICS, according to 3GPP TS 51.010-2 [84], 3GPP TS 34.121-2 [85], 3GPP TS 36.521-2 [115] and 3GPP TS 36.523-2 [116], is a statement of the implemented and supported capabilities and options of a device. If the user changes the command settings during the certification process, the PICS of the application device integrating a u-blox cellular module must be changed accordingly.

☞ TOBY-L2 / MPCI-L2 / LARA-R2 / TOBY-R2 / SARA-U2 / LISA-U2 / LISA-U1
The list of supported bands presents exclusively GSM, UMTS or LTE bands depending on which RAT the MT is currently registered. If it is not registered, the bands presented depend on +URAT command:

- If in single mode, depends on <AcT>
- If in dual mode, depends on <PreferredAct>

☞ TOBY-L200-00S / TOBY-L201 / TOBY-L210-00S / TOBY-L210-60S / MPCI-L200-00S / MPCI-L201 / MPCI-L210-00S
The set command forces a single mode behaviour thus the +URAT <AcT> parameter value could be modified.

☞ TOBY-L2 / MPCI-L2
After having issued a set command the module automatically performs a de-registration/registration cycle.

7.22.2 Syntax

Type	Syntax	Response	Example
Set	AT+UBANDSEL=<band_1>[,<band_2>[,...]]	OK	AT+UBANDSEL=900 OK
Read	AT+UBANDSEL?	+UBANDSEL: <band_1>[,<band_2>[,...]] OK	+UBANDSEL: 850,900,1800,1900 OK
Test	AT+UBANDSEL=?	+UBANDSEL: (list of supported <band_x>) OK	+UBANDSEL: (0,850,900,1800,1900) OK

7.22.3 Defined values

Parameter	Type	Description
<band_x>	Number	• 0: restore the factory-programmed configuration of the module • 700: selection of 700 MHz band • 800: selection of 800 MHz band • 850: selection of 850 MHz band • 900: selection of 900 MHz band • 1500: selection of 1500 MHz band • 1700: selection of 1700 MHz band • 1800: selection of 1800 MHz band • 1900: selection of 1900 MHz band • 2100: selection of 2100 MHz band • 2600: selection of 2600 MHz band

7.22.4 Notes

TOBY-L2 / MPCI-L2

- Issue the AT+CFUN=4 AT command to detach the module from the network. Use AT+CFUN=1 to return to the module full functionality.

LARA-R2 / TOBY-R2 / SARA-U2 / LISA-U2 / LISA-U1 / SARA-G4 / SARA-G3 / LEON-G1

- Issue the AT+COPS=2 AT command to detach the module from the network.

7.23 Select band +UACT

+UACT						
Modules	TOBY-L4					
Attributes	**Syntax**	**PIN required**	**Settings saved**	**Can be aborted**	**Response time**	**Error reference**
	full	Yes	NVM	No	-	+CME Error

7.23.1 Description

Allows switching from the automatic band selection to the selection of one or more allowed GSM, UMTS and LTE bands.

☞ The MT will camp on a cell, if suitable, belonging to one of the select bands; the OK final result code is not related to the result of the camping on the new cell.

☞ Band changes for one particular RAT will not affect the other RAT configuration. (i.e. setting LTE bands will not change anything on GSM/UMTS bands)

☞ u-blox cellular modules are certified according to all the capabilities and options stated in the Protocol Implementation Conformance Statement document (PICS) of the module. The PICS, according to 3GPP TS 51.010-2 [84], 3GPP TS 34.121-2 [85], 3GPP TS 36.521-2 [115] and 3GPP TS 36.523-2 [116], is a statement of the implemented and supported capabilities and options of a device. If the user changes the command settings during the certification process, the PICS of the application device integrating a u-blox cellular module must be changed accordingly.

7.23.2 Syntax

Type	Syntax	Response	Example
Set	AT+UACT=<reserved>,<reserved>,<reserved>,<band_1>[,<band_2>[,...]]	OK	AT+UACT=,,,900,8,103 OK
Read	AT+UACT?	+UACT: ,,,<band_1>[,<band_2>[,...]] OK	+UACT: ,,,900,8,103 OK
Test	AT+UACT=?	+UACT: ,,,(list of supported GSM <band_X>),(list of supported UMTS <band_X>),(list of supported LTE <band_X>) OK	+UACT: ,,,(900,1800),(1,8),(101,103,107,108,120),(138) OK

7.23.3 Defined values

Parameter	Type	Description
<band_x>	Number	• 0: restore the factory-programmed configuration of the module GSM band: • 900: selection of 900 MHz band • 1800: selection of 1800 MHz band • 1900: selection of 1900 MHz band • 850: selection of 850 MHz band • 450: selection of 450 MHz band • 480: selection of 480 MHz band • 750: selection of 750 MHz band • 380: selection of 380 MHz band • 410: selection of 410 MHz band • 710: selection of 710 MHz band • 810: selection of 810 MHz band UMTS band: • 1: band UMTS I • 2: band UMTS II • 3: band UMTS III • 4: band UMTS IV • 5: band UMTS V • 6: band UMTS VI • 7: band UMTS VII • 8: band UMTS VIII • 9: band UMTS IX • 10: band UMTS X • 11: band UMTS XI • 12: band UMTS XII • 13: band UMTS XIII • 14: band UMTS XIV • 15: band UMTS XV • 16: band UMTS XVI • 17: band UMTS XVII • 18: band UMTS XVIII • 19: band UMTS XIX • 20: band UMTS XX • 21: band UMTS XXI • 22: band UMTS XXII • 25: band UMTS XXV UMTS TDD band: • 201: band UMTS TDD A • 202: band UMTS TDD B • 203: band UMTS TDD C • 204: band UMTS TDD D

Parameter	Type	Description
		• 205: band UMTS TDD E • 206: band UMTS TDD F LTE band: • 101: band LTE 1 • 102: band LTE 2 • 103: band LTE 3 • 104: band LTE 4 • 105: band LTE 5 • 106: band LTE 6 • 107: band LTE 7 • 108: band LTE 8 • 109: band LTE 9 • 110: band LTE 10 • 111: band LTE 11 • 112: band LTE 12 • 113: band LTE 13 • 114: band LTE 14 • 115: band LTE 15 • 116: band LTE 16 • 117: band LTE 17 • 118: band LTE 18 • 119: band LTE 19 • 120: band LTE 20 • 121: band LTE 21 • 122: band LTE 22 • 123: band LTE 23 • 124: band LTE 24 • 125: band LTE 25 • 126: band LTE 26 • 127: band LTE 27 • 128: band LTE 28 • 129: band LTE 29 • 130: band LTE 30 • 131: band LTE 31 • 132: band LTE 32 • 133: band LTE 33 • 134: band LTE 34 • 135: band LTE 35 • 136: band LTE 36 • 137: band LTE 37 • 138: band LTE 38 • 139: band LTE 39 • 140: band LTE 40 • 141: band LTE 41 • 142: band LTE 42 • 143: band LTE 43 • 144: band LTE 44 • 145: band LTE 45 • 146: band LTE 46 • 147: band LTE 47 • 148: band LTE 48 • 149: band LTE 49 • 150: band LTE 50 • 151: band LTE 51 • 152: band LTE 52 • 153: band LTE 53 • 154: band LTE 54

Parameter	Type	Description
		• 155: band LTE 55 • 156: band LTE 56 • 157: band LTE 57 • 158: band LTE 58 • 159: band LTE 59 • 160: band LTE 60 • 161: band LTE 61 • 162: band LTE 62 • 163: band LTE 63 • 164: band LTE 64

7.24 Cell environment description +CGED

+CGED						
Modules	LARA-R2 TOBY-R2					
	SARA-U2 LISA-U2 LISA-U1					
	SARA-G3 LEON-G1					
Attributes	**Syntax**	**PIN required**	**Settings saved**	**Can be aborted**	**Response time**	**Error reference**
	partial	No	No	No	-	+CME Error

7.24.1 Description

Provides the cell environment information that can be periodic (with a period of 5 s) or performed only once depending on the <mode> parameter value:

- <mode>=0, 1, 128, 129:
  - Both the serving and neighbour cell information are provided
- <mode>=3, 4, 131, 132:
  - A subset of the network parameters of the serving cell information is provided
- <mode>=5, 6, 133, 134:
  - Both the serving and neighbour cell information are provided
  - A subset of the network parameters of the serving cell information is provided
  - The information on neighbour cells contained in radio resource BA list is reported. The number of neighbour cells can be configured by means of the +UDCONF=83 AT command (where supported); by default, the neighbour cell content may be available up to 32 times in idle-mode, up to 6 in dedicated-mode; in packet transfer mode (PDP context active) no reporting is possible on AT UART interface as it is used for data transfer (the multiplexer can be used to create two virtual serial ports, one for data transfer, one for AT commands)

If <mode> parameter value is greater than 127 the information text response will provide the cell information in a compact, machine readable format without the tags (e.g. "MCC", "RxLev" will not be printed).

☞ LISA-U200-01S / LISA-U200-02S / LISA-U200-52S / LISA-U200-62S / LISA-U230 / LISA-U260 / LISA-U270 The SIM verification is needed.

The information text response of the set command depends on the cellular standard and the access technology (if present).

In case of LTE radio access technology:

- The information for up to 32 neighbour cells is available

In case of UMTS radio access technology:

- The information for up to 56 neighbour cells is available (32 reserved for 3G cells and 24 for 2G cells)
- The syntax for cell information differs in the channel type

In case of GSM radio access technology:

- The information for up to 32 neighbour cells is available

☞ An Equivalent PLMN (Public Land Mobile Network) is a PLMN equivalent to the RPLMN (Registered PLMN). The MT has a list of EPLMN's that is updated at the end of each location update procedure, routing area update procedure and GPRS attach procedure.

7.24.2 Syntax

Type	Syntax	Response
Set	AT+CGED=[<mode>[, <details>]]	**Response syntax for 2G modules:** +CGED: Service-Cell: MCC: <MCC>, MNC: <MNC>, LAC: <LAC>, CI: <CI>, BSIC: <BSIC> [Equivalent PLMNs: MCC: <MCC>, MNC: <MNC>] Arfcn: <arfcn>, [RxLevServ:: <RxLevServ>,] [RfChannels: <RfChannels>,]Arfcn_ded: <Arfcn_ded>, [RxLevFull: <RxLevFull>,] [RxLevSub: <RxLevSub>,] [RxQualFull: <RxQualFull>, RxQualSub: <RxQualSub>, Ciphering: <ciphering> ms_txpwr: <ms_txpwr>, rx_acc_min: <rx_acc_min>, cbq: <cbq>, cba: <cba>, c2_valid: <c2_valid>, cr_offset: <cr_offset>, tmp_offset: <tmp_offset>, penalty_t: <penalty_t>, c1: <c1>, c2: <c2>, ch_type: <ch_type>, ch_mode: <ch_mode>, txpwr: <txpwr>, dtx_used: <dtx_used>, t3212: <t3212>, acc: <acc>,][t_adv: <t_adv>,] [bs_pa_mfrms: <bs_pa_mfrms>, dsc: <dsc>, rll: <rll>] Neighbour Cell <n>: MCC: <MCC>, MNC: <MNC>, LAC: <LAC>, CI: <CI>, BSIC: <BSIC>, Arfcn: <arfcn>, [RxLev: <RxLev>] [C1_nc: <C1_nc>, C2_nc: <C2_nc>] [GPRS-Parameters: GPRS_sup: <GPRS_sup>, RAC: <RAC>, SplitPg: <SplitPg>, NCO: <NCO>, NOM: <NOM>, T3192: <T3192>, Acc_Burst_type: <Acc_Burst_type>, DRX_Timer_Max: <DRX_Timer_Max>, PBCCH: <PBCCH>, Ext_Measure_Order: <Ext_Measure_Order>, PSI1_r_per: <PSI1_r_per>, Count_LR: <Count_LR>, Count_HR: <Count_HR>, C_R_Hyst: <C_R_Hyst>, C31: <C31>, C32: <C32>, Prior_Acc_Thr: <Prior_Acc_Thr>] OK
		Response syntax for 4G/3G modules (3G RAT): +CGED: RAT:<rat>, URR:<rrc_state>, DC:<urrcdc_state>, BP:<urrcbp_state>, M:<urrcm_state>, ERR:<as_error_code>, RC:<release_cause>, OOS:<out_of_service>, BLER:<meas_bler>,TSIR:<target_sir>,MSIR:<meas_sir>, HSC:<hierarchical_cell_structure>, HMD:<high_mobility_detected>, LM:<limited_service>, Cell-ID:<cell_identity>, DLF:<dl_frequency>, ULF:<ul_frequency>, SC:<scrambling_code>, RSCP LEV:<rscp lev>, ECN0 LEV:<ecn0_lev>, C:<ciphering>, D:<ps_data_transfered>, PSM:<power_saving_mode>, [Cell:<cell_type>=AS, SC:<scrambling_code>, RSCP LEV:<rscp_lev>, ECN0 LEV:<ecn0_lev>, DLF:<dl_frequency>] [Cell:<cell_type>=VAS, SC:<scrambling_code>, RSCP LEV:<rscp_lev>, ECN0 LEV:<ecn0_lev>, DLF:<dl_frequency>] [Cell:<cell_type>=M, SC:<scrambling_code>, RSCP LEV:<rscp_lev>, ECN0 LEV:<ecn0_lev>, DLF:<dl_frequency>] [Cell:<cell_type>=D, SC:<scrambling_code>, RSCP LEV:<rscp_lev>, ECN0 LEV:<ecn0_lev>, DLF:<dl_frequency>] [Cell:<cell_type>=G, B:<gsm_band>,Arfcn:<arfcn>, RXLEV:<RxLev>, Bsic:<BSIC>, RV:<ranking_value>] [Cell:<cell_type>=U, SC:<scrambling_code>, RSCP LEV:<rscp_lev>, ECN0 LEV:<ecn0_lev>, DLF:<dl_frequency>, RV:<ranking_value>]

Type	Syntax	Response
		[Cell:<cell_type>=NU, SC:<scrambling_code>, RSCP LEV:<rscp_lev>, ECN0 LEV:<ecn0_lev>, DLF:<dl_frequency>, RS:<ranking_status>] [Cell:<cell_type>=NG B:<gsm band>, Arfcn:<arfcn>, RXLEV:<RxLev>, Bsic:<BSIC>, RS:<ranking_status>] RR measurement evaluation: MeasId:<meas_id>, EventId:<event_id>, <par 3>, <par 4>, <par 5>, <par 6>,..., <par N>, MeasId:<meas_id>, EventId:, <par 3>, <par 4>, <par 5>, <par 6>,..., <par M>, etc... MM: Process:CO, MMs:<mm_state>, MMSs:<mm_service_state>, MSC:<ms_class>, T:<active_timer_bitmap> Process:CS, MMs:<mm_state>, MMSs:<mm_service_state>, LUS:<mm_update_status>, T:<active_timer_bitmap>, L:<limited_service> Process:PS, MMs:<mm_state>, MMSs:<mm_service_state>, LUS:<mm_update_status>, T:<active_timer_bitmap>, L:<limited_service>, GS:<gprs_supported>, R:<ready_state> Cell change counters: CRT:<cell_reselecetion_total>, IRCR:<ir_cell_reselecetion>, AIRCR:<attempted_ir_cell_reselecetion>,IRHO:<ir_handover>, AIRHO:<attempted_ir_handover> Equivalent PLMNs: MCC:<mobile_country_code>, MNC:<mobile_network_code> Serving PLMN: MCC:<mobile_country_code>, MNC:<mobile_network_code>, LAC:<location_area_code>, RAC:<routing_area_code> OK
		Response syntax for 4G/3G modules (2G RAT): +CGED: RAT: <rat>, RR:<grr_state> SFRLC:<signal_failure/radio_link_counter>, RSR:<reselection_reason>, RC:<release_cause>, LM:<limited_service> B:<gsm_band>, Arfcn:<arfcn>, RXLEV:<RxLev>, C1:<C1>, C2:<C2>, Bsic:<BSIC>, MA:<nr_of_rf_in_ma>,MADed:<dedicated_arfcn>, GSM: Ci:<CI>, B:<gsm_band>, Arfcn:<arfcn>,RXLEV:<RxLev>, C1:<C1>, Bsic:<BSIC> UMTS: SC:<scrambling_code>, RSCP LEV:<rscp_lev>, ECN0 LEV:<ecn0_lev>, DLF:<dl_frequency> MM: Process:CO, MMs:<mm_state>, MMSs:<mm_service_state>, MSC:<ms_class>, T:<active_timer_bitmap> Process:CS, MMs:<mm_state>, MMSs:<mm_service_state>, LUS:<location_update_status>, T:<active_timer_bitmap>, L:<limited_service> Process:PS, MMs:<mm_state>, MMSs:<mm_service_state>, LUS:<location_update_status>, T:<active_timer_bitmap>, L:<limited_service>, GS:<gprs_supported>, R:<ready_state> Cell change counters: CRT:<cell_reselecetion_total>, IRCR:<ir_cell_reselection_counter>, AIRCR:<attempted_ir_cell_reselection>, IRHO:<ir_handover>, AIRHO:<attempted_ir_handover> Coding Scheme: dl_sc:<dl_sc>,ul_sc:<ul_sc> Equivalent PLMNs:

Type	Syntax	Response
		MCC:<MCC>, MNC:<MNC> Serving PLMN: MCC:<MCC>, MNC:<MNC>, LAC:<LAC>, RAC:<RAC>, AcT:<AcT> GPRS-Parameters: SplitPg:<SplitPg>,NCO:<NCO>,NOM:<NOM>, T3192:<T3192>, Acc_Burst_type:<Acc_Burst_type>, DRX_Timer_Max:<DRX_Timer_Max>, PBCCH:<PBCCH>, Ext_Measure_Order:<Ext_Measure_Order> PSI1_r_per:<PSI1_r_per>, si13_location: <si13_location> packet_psi_status:<packet_psi_status> packet_si_status:<packet_si_status> ext_upl_tbf_supported:<ext_upl_tbf_supported> ccn_active:<ccn_active> pfc_feat_supported:<pfc_feat_supported> Count_LR:<Count_LR>, Count_HR:<Count_HR>, C_R_Hyst:<C_R_Hyst>, C31:<C31>, C32:<C32>, Prior_Acc_Thr:<Prior_Acc_Thr> OK
		Response syntax for 4G modules (4G RAT): +CGED: RAT:<rat>, MCC:<MCC>, MNC:<MNC>, CellID:<CI>, PhysCellID:<PhysCellID>, TAC:<TAC>, RSRP:<RSRP>, RSRQ:<RSRQ>, TA:<TA>, TA_type:<TA_type> <num_measured_EUTRA> Measured EUTRA neighbour cells: Neighbour[]: EARFCN:<EARFCN>, PhysCellID:<PhysCellID> RSRP:<RSRP>, RSRQ:<RSRQ> OK
		Response syntax in machine readable format for 3G modules (2G RAT): +CGED: RAT:"GSM", S:<MCC>,<MNC>,<LAC>,<CI>,<BSIC>,<arfcn>,<RxLev>,<nr_of_rf_in_ma>,<dedicated_arfcn>,<RxLevFull>,<RxLevSub>,<RxQualFull>,<RxQualSub>,<ciphering>,<ms_txpwr>,<rx_acc_min>,<cbq>,<cba>,<c2_valid>,<cr_offset>,<tmp_offset>,<penalty_t>,<c1>,<c2>,<ch_type>,<ch_mode>,<txpwr>,<dtx_used>,<t3212>,<acc>,<t_adv>,<bs_pa_mfrms>,<dsc>,<rll> GS:<GPRS_sup>,<RAC>,<SplitPg>,<NCO>,<NOM>,<T3192>,<Acc_Burst_type>,<DRX_Timer_Max>,<PBCCH>,<Ext_Measure_Order>,<PSI1_r_per>,<Count_LR>,<Count_HR>,<C_R_Hyst>,<C31>,<C32>,<Prior_Acc_Thr> [EPLMN<eplmn_index>:<MNC>,<MCC>] [N<cell_index>:<LAC>,<CI>,<BSIC>,<arfcn>,<RxLev>,<c1>,<c2>] [UN<cell_index>:<scrambling_code>,<rscp_lev>,<ecn0_lev>,<dl_frequency>] OK
		Response syntax in machine readable format for 3G modules (3G RAT): +CGED: RAT:"UMTS", S:<MCC>,<MNC>,<LAC>,<RAC>,<CI>,<dl_frequency>,<ul_frequency>,<scrambling_code>,<rscp_lev>,<ecn0_lev>,<ciphering>,<ps_data_transfered>,<hierarchical_cell_structure>,<high_mobility_detect>,<limited_service>,<rrc_state> [EPLMN<eplmn_index>:<MNC>,<MCC>] [AS:FFFF,FFFF,FFFF,FFFF,<scrambling_code>,<dl_frequency>,<rscp_lev>,<ecn0_lev>]

Type	Syntax	Response
		[VAS:FFFF,FFFF,FFFF,FFFF,<scrambling_code>,<dl_frequency>,<rscp_lev>,<ecn0_lev>] [M:FFFF,FFFF,FFFF,FFFF,<scrambling_code>,<dl_frequency>,<rscp_lev>,<ecn0_lev>] [D:FFFF,FFFF,FFFF,FFFF,<scrambling_code>,<dl_frequency>,<rscp_lev>,<ecn0_lev>] [U:FFFF,FFFF,FFFF,FFFF,<scrambling_code>,<dl_frequency>,<rscp_lev>,<ecn0_lev>] [NU:FFFF,FFFF,FFFF,FFFF,<scrambling_code>,<dl_frequency>,<rscp_lev>,<ecn0_lev>] OK
		Response syntax in machine readable format for 2G modules: +CGED: S:<MCC>,<MNC>,<LAC>,<CI>,<BSIC>,<arfcn>,<RxLev>,<nr_of_rf_in_ma>,<dedicated_arfcn>,<RxLevFull>,<RxLevSub>,<RxQualFull>,<RxQualSub>,<ciphering>,<ms_txpwr>,<rx_acc_min>,<cbq>,<cba>,<c2_valid>,<cr_offset>,<tmp_offset>,<penalty_t>,<c1>,<c2>,<ch_type>,<ch_mode>,<txpwr>,<dtx_used>,<t3212>,<acc>,<t_adv>,<bs_pa_mfrms>,<dsc>,<rll> GS:<GPRS_sup>,<RAC>,<SplitPg>,<NCO>,<NOM>,<T3192>,<Acc_Burst_type>,<DRX_Timer_Max>,<PBCCH>,<Ext_Measure_Order>,<PSI1_r_per>,<Count_LR>,<Count_HR>,<C_R_Hyst>,<C31>,<C32>,<Prior_Acc_Thr> [EPLMN<eplmn_index>:<MNC>,<MCC>] [N<cell_index>:<LAC>,<CI>,<BSIC>,<arfcn>,<RxLev>,<c1>,<c2>] OK
Read	AT+CGED?	+CGED: <mode> OK
Test	AT+CGED=?	+CGED: (list of supported <mode>s) OK

7.24.3 Defined values

Parameter	Type	Description
<mode>	Number	Cell environment information mode: • 0 (default value): one shot dump • 1: periodic refreshed dump; the information for up to 32 neighbour cells is available • 2: stop periodic dump • 3: one shot serving cell dump • 4: periodic serving cell refreshed dump • 5: one shot serving cell and neighbour cells dump • 6: periodic serving cell and neighbour cells refreshed dump • 128: one shot dump without the tags • 129: periodic refreshed dump without the tags • 130: stop periodic dump (same as 2) • 131: one shot serving cell without the tags • 132: periodic serving cell refreshed without the tags • 133: one shot serving cell and neighbour cells without the tags • 134: periodic serving cell and neighbour cells refreshed without the tags
<details>	Number	• 0 (default value): it does not display <scrambling_code> (3G RAT) or <physCellID> (4G RAT) if <mode>=3 or <mode>=4 is set • 1: displays <scrambling_code> (3G RAT) or <physCellID> (4G RAT) if <mode>=3 or <mode>=4 is set
<rat>	String	Indicates the radio access technology and may be: • "GSM" • "UMTS" • "LTE"

Parameter	Type	Description
<MCC>	Number	Mobile Country Code, range 0 - 999 (3 digits). Other values are to be considered invalid / not available
<MNC>	Number	Mobile Network Code, range 0 - 999 (1 to 3 digits). Other values are to be considered invalid / not available
<LAC>	Number	Location Area Code, range 0h-FFFFh (2 octets)
<CI>	Number	Cell Identity: • 2G cell: range 0h-FFFFh (2 octets) • 3G cell: range 0h-FFFFFFFh (28 bits) • 4G cell: range 0h-FFFFFFFh (28 bits)
<BSIC>	Number	Base Station Identify Code, range 0h-3Fh (6 bits)
<arfcn>	Number	Absolute Radio Frequency Channel Number, range 0 - 1023. The string INVALID_ARFCN will be provided if the information is not available. The parameter value also decodes the band indicator bit (DCS or PCS) by means of the most significant byte (8 means 1900 band) (i.e. if the parameter reports the value 33485, it corresponds to 0x82CD, in the most significant byte there is the band indicator bit, so the <arfcn> is 0x2CD (717) and belongs to 1900 band).
<RxLev>	Number	Received signal level on the cell, range 0 - 63 and 255 (255 is provided if the information is not available); see the 3GPP TS 05.08 [28]
<RxLevServ>	Number	Received signal level on the cell, range 0 - 63 and 255 (255 is provided if the information is not available); see the 3GPP TS 05.08 [28]
<RfChannels>	Number	Number of frequencies in Mobile Allocation: 0x01 if single RF and 0 if n.a.; see the 3GPP TS 04.18 [40]
<Arfcn_ded>	Number	Single ARFCN of dedicated channel; it is the first ARFCN of Mobile Allocation
<RxLevFull>	Number	Received signal strength on serving cell, measured on all slots; range 0h-3Fh; see the 3GPP TS 04.18 [40]
<RxLevSub>	Number	Received signal strength on serving cell, measured on a subset of slots; range 0h-3Fh; see the 3GPP TS 04.18 [40]
<RxQualFull>	Number	Received signal quality on serving cell, measured on all slots; range 0-7; see the 3GPP TS 04.18 [40]
<RxQualSub>	Number	Received signal quality on serving cell, measured on a subset of slots, range 0-7; see the 3GPP TS 04.18 [40]
<ciphering>	Number	GSM ciphering. Allowed values: • ON • OFF
<ms_txpwr>	Number	Maximum TX power level an MT may use when accessing the system until otherwise commanded, range 0 - 31; see the 3GPP TS 04.18 [40]
<rx_acc_min>	Number	RXLEV-ACCESS-MIN, range 0 - 63; see the 3GPP TS 04.18 [40]
<cbq>	Number	CELL_BAR_QUALIFY, range 0 - 1; see the 3GPP TS 05.08 [28]
<cba>	Number	CELL_BAR_ACCESS, range 0 - 1; see the 3GPP TS 05.08 [28]
<c2_valid>	Number	True if all parameter for calculation of c2 are available; range 0 - 1
<cr_offset>	Number	CELL_RESELECT_OFFSET, range 0 - 63 (6 bits); see the 3GPP TS 04.18 [40]
<tmp_offset>	Number	TEMPORARY_OFFSET, range 0 - 7; see the 3GPP TS 04.18 [40]
<penalty_t>	Number	Penalty time, range 0 - 31; see the 3GPP TS 04.18 [40]
<c1>, <C1_nc>	Number	Value of c1; see the 3GPP TS 05.08 [28]
<c2>, <C2_nc>	Number	Value of c2; see the 3GPP TS 05.08 [28]
<ch_type>	Number	Channel type of the current connection (see the 3GPP TS 04.18 [40]): • 0: invalid channel type • 1: TCH/F • 2: TCH/H • 3: SDCCH/4 • 4: SDCCH/8 • other values are to be considered invalid / not available
<ch_mode>	Number	Channel mode of current connection (see the 3GPP TS 04.18 [40]): • 0: signalling only • 1: speech full rate • 2: speech half rate • 3: data full rate, 12.0 kb/s radio interface rate • 4: data full rate, 6.0 kb/s radio interface rate

Parameter	Type	Description
		• 5: data half rate, 6.0 kb/s radio interface rate • 6: data full rate, 3.6 kb/s radio interface rate • 7: data half rate, 3.6 kb/s radio interface rate • 8: speech full rate version 2 • 9: speech full rate version 3 • 10: speech half rate version 2 • 11: speech half rate version 3 • other values are to be considered invalid / not available
<txpwr>	Number	Transmit power level of the current connection, range 0-31 or 255 if the module is not connected; see the 3GPP TS 04.18 [40]
<dtx_used>	Number	DTX used, range 0 - 1; see the 3GPP TS 04.18 [40]
<t3212>	Number	T3212. The T3212 timeout value field is coded as the binary representation of the timeout value for periodic updating in decihours; range 0-255 (8 bits); see the 3GPP TS 04.18 [40]
<acc>	Number	Access control class (RACH Control Parameters); see the 3GPP TS 04.18 [40]
<t_adv>	Number	Timing Advance, it is valid during a connection and it will updated during the next connection; see the 3GPP TS 04.18 [40]
<bs_pa_mfrms>	Number	BS_PA_MFRMS (multiframes period for transmission of PAGING REQUEST), range 0 - 7 mapped to 2-9; see the 3GPP TS 05.02 [42]
<dsc>	Number	Downlink Signalling Counter
<rll>	Number	Radio Link Loss Counter
<grr_state>	Number	RR state. Allowed values: • 0: GRR_UNDEFINED • 1: GRR_START • 2: GRR_CELL_SELECTION • 3: GRR_WAIT_CELL_SELECTION • 4: GRR_DEACT_CELL_SELECTION • 5: GRR_SELECT_ANY_CELL • 6: GRR_WAIT_SELECT_ANY_CELL • 7: GRR_DEACT_SELECT_ANY_CELL • 8: GRR_WAIT_INACTIVE • 9: GRR_INACTIVE • 10: GRR_IDLE • 11: GRR_PLMN_SEARCH • 12: GRR_CELL_RESELECTION • 13: GRR_WAIT_CELL_RESELECTION • 14: GRR_DEACT_PLMN_SEARCH • 15: GRR_CELL_CHANGE • 16: GRR_CS_CELL_CHANGE • 17: GRR_WAIT_CELL_CHANGE • 18: GRR_SINGLE_BLOCK_ASSIGN • 19: GRR_DOWNL_TBF_EST • 20: GRR_UPL_TBF_EST • 21: GRR_WAIT_TBF • 22: GRR_TRANSFER • 23: GRR_WAIT_SYNC • 24: GRR_DTM_ENH_CALL_EST • 25: GRR_DTM • 26: GRR_DTM_ENH_MO_CAL_EST • 27: GRR_MO_CON_EST • 28: GRR_MT_CON_EST • 29: GRR_RR_CONNECTION • 30: GRR_DTM_REL • 31: GRR_CALL_REESTABLISH • 32: GRR_DEACT_CALL_REESTABLISH • 33: GRR_NORMAL_CHN_REL • 34: GRR_LOCAL_CHN_REL • 35: GRR_WAIT_IDLE

Parameter	Type	Description
		• 36: GRR_DEACTIVATION • 37: GRR_ENH_DTM_CS_CALL_EST • 38: GRR_IR_CELL_RESEL_TO_UTRAN • 39: GRR_DTM_ENH_CS_CALL_EST • 40: GRR_IR_ACTIVE_ON_HOLD • 41: GRR_IR_RESEL_ABORT • 42: GRR_IR_WAIT_INTER_RAT • 43: GRR_IR_WAIT_FOR_RSRC

GPRS parameters:

Parameter	Type	Description
<GPRS_sup>	Number	GPRS supported (in serving cell); range 0 - 1; see the 3GPP TS 04.18 [40]
<RAC>	Number	Routing Area Code, range 0h-FFh (1 octet); see the 3GPP TS 04.18 [40]
<SplitPg>	Number	SPGC_CCCH_SUP split pg_cycle on ccch by network, range 0 - 1 (2 bits); see the 3GPP TS 04.18 [40]
<NCO>	Number	NETWORK_CONTROL_ORDER (GPRS_Cell_Options), range 0 - 3 (2 bits); see the 3GPP TS 04.18 [40]
<NOM>	Number	NETWORK OPERATION MODE (GPRS_Cell_Options), range 0 - 3 (2 bits); see the 3GPP TS 04.18 [40]
<T3192>	Number	T3192 (Wait for Release of the TBF after reception of the final block), range 0 - 7 mapped to 0-1500 msec (3 bits); see the 3GPP TS 04.60 [41]: • 0: 500 ms • 1: 1000 ms • 2: 1500 ms • 3: 0 ms • 4: 80 ms • 5: 120 ms • 6: 160 ms • 7: 200 ms
<Acc_Burst_type>	Number	ACCESS_BURST_TYPE, range 0 - 1 (mapped to 8-bits format,11-bit format); see the 3GPP TS 04.60 [41]
<DRX_Timer_Max>	Number	DRX_TIMER_MAX, range 0 - 7 (3 bits); see the 3GPP TS 04.60 [41]
<PBCCH>	Number	PBCCH present, range 0 - 1
<Ext_Measure_Order>	Number	EXT_MEASUREMENT_ORDER, range 0 - 3 (2 bits); see the 3GPP TS 04.60 [41]
<PSI1_r_per>	Number	PSI1_REPEAT_PERIOD, range 0 - 15 mapped to 1-16 (4 bits); see the 3GPP TS 04.60 [41]
<Count_LR>	Number	PSI_COUNT_LR, range 0 - 63 (6 bits); see the 3GPP TS 04.60 [41]
<Count_HR>	Number	PSI_COUNT_HR, range 0 - 15 mapped to 1-16 (4 bits); see the 3GPP TS 04.60 [41]
<C_R_Hyst>	Number	CELL_RESELECT_HYSTERESIS, range 0 - 7 (3 bits); see the 3GPP TS 04.60 [41]
<C31>	Number	Value of c31, number; see the 3GPP TS 05.08 [28]
<C32>	Number	Value of c32, number; see the 3GPP TS 05.08 [28]
<Prior_Acc_Thr>	Number	PRIORITY_ACCESS_THR, range 0-7 (3 bits); see the 3GPP TS 04.18 [40]

UMTS parameters:

Parameter	Type	Description
<rrc_state>	String	• "CD": CELL_DCH (0) • "CF": CELL_FACH(1) • "CP": CELL_PCH(2) • "UP": URA_PCH(3) • "ID": IDLE(4) • "ST": START(5)
<urrcdc_state>	Number	Three hexadecimal digits (octet 1, 2: event, 3: state). For debug purposes only.
<urrcbp_state>	Number	Four hexadecimal digits (octet 1, 2: event, 3, 4: state). For debug purposes only.
<urrcm_state>	Number	Three hexadecimal digits (octet 1, 2: event, 3: state). For debug purposes only.
<as_error_code>	Number	Indicates if an AS error occurred. Allowed values: • 0: no error

Parameter	Type	Description
		• 81: UMAC, no TFCI (Transport Format Code identifier) found • 82: UMAC, RLC timing error
<release_cause>	Number	MM RR release cause. For debug purposes only
<out_of_service>	Number	Service state: • 0: service present • 1: out of service
<meas_bler>	Number	Measured BLER (Block Error Rate). Allowed values: • Range: 0.000001 to 0.99 • If out of range: -
<target_sir>	Number	Targeted SIR (Signal to Interference Ratio). Allowed values: • Range: -10 to 20 • If out of range: -
<meas_sir>	Number	Measured SIR (Signal to Interference Ratio). Allowed values: • Range: -10 to 20 • If out of range: -
<hierarchical_cell_structure>	Number	HCS (Hierarchical Cell Structure): • 0: not used • 1: used
<high_mobility_detect>	Number	High mobility: • 0: not detected • 1: detected
<cell_identity>	Number	Cell identity (eight hex digits)
<dl_frequency>	Number	Downlink frequency. Range 0 - 16383
<ul_frequency>	Number	Uplink frequency. Range 0 - 16383
<ciphering>	String	Ciphering: • 1: enabled • 2: disabled
<ps_data_transfered>	Number	PS data: • 0: transferred • 1: not transferred
<power_saving_mode>	Number	Power saving: • 0: disabled • 1: enabled
<cell_type>	String	Cell type: • "AS": Active Set • "VAS": Virtual Active Set • "M": Monitored Cells • "D": Detected Cells • "G": GSM cells • "U": UMTS cells • "NU": Non Ranked UMTS cells • "NG": Non Ranked GSM cells
<scrambling_code>	Number	Scrambling code; range 0 - 511
<rscp_lev>	Number	Received Signal Code Power expressed in dBm levels. Range 0 - 91. 0 — RSCP < -115 — dBm 1 — -115 = RSCP < -114 — dBm ... — ... 90 — -26 = RSCP < -25 — dBm 91 — RSCP = -25 — dBm
<ecn0_lev>	Number	Energy per Chip/Noise ratio expressed in dB levels. Range 0 - 49. ECN0 < -24 — dB 1 — -24 = ECN0 < -23.5 — dB ... — ... 48 — -0.5 = ECN0 < 0 — dB 49 — ECN0 = 0
<gsm_band>	String	GSM band:

Parameter	Type	Description
		• "D": 1800 MHz • "P": 1900 MHz • "G": 900 MHz
<ranking_value>	Number	Cell's ranking value
<ranking_status>	Number	Ranking status for Non Ranked UMTS cells. Allowed values: • 0: EM_CELL_SUITABLE • 1: EM_NOT_MEASURED • 2: EM_CELL_BARRED • 3: EM_WRONG_PLMN • 4: EM_HCS_CRITERIA_PRIO • 5: EM_HCS_H_VALUE • 6: EM_S_VALUE
<meas_id>	Number	RR measurement ID (one hex digit). For debug purpose only
<event_id>	Number	Event ID (two hex digits). For debug purpose only
<par 3,4,5..,M,..,N>	Number	Range 0-99
<signal_failure/ radio_link_counter>	Number	Range 0-99. For debug purpose only
<reselection_ reason>	Number	Indicates the reason for cell reselection. Allowed values: • 0: RESEL_PLMN_CHANGE • 1: RESEL_SERV_CELL_NOT_SUITABLE • 2: RESEL_BETTER_C2_C32 • 3: RESEL_DOWNLINK_FAIL • 4: RESEL_RA_FAILURE • 5: RESEL_SI_RECEIPT_FAILURE • 6: RESEL_C1_LESS_NULL • 7: RESEL_CALL_REEST_TIMEOUT • 8: RESEL_ABNORMAL_RESEL • 9: RESEL_CELL_CHANGE_ORDER • 10: RESEL_NOT_OCCURRED
<dl_sc>/<ul_sc>	Number	Current burst configuration and Coding Scheme of downlink (<dl_sc>) or uplink (<ul_sc>) TBF may be: • "NB_CS_1" • "NB_CS_2" • "NB_CS_3" • "NB_CS_4" • "NB_MCS_1" • "NB_MCS_2" • "NB_MCS_3" • "NB_MCS_4" • "NB_MCS_5" • "NB_MCS_6" • "NB_MCS_7" • "NB_MCS_8" • "NB_MCS_9" • "NB_MCS_5_7" • "NB_MCS_6_9" • "AB_8" • "AB_11" • "AB_11_E" • if none of the previous ""

UMTS/GSM MM parameters:

Parameter	Type	Description
<mm_state>	Number	MM state. For debug purpose only. Range 1 - 16
<mm_service_state>	Number	MM service state. For debug purpose only. Range 1 - 10.
<mm_update_ status>	Number	Location update status. For debug purpose only. Allowed values: • 1: updated (MMST_U1_UPDATED)

Parameter	Type	Description
		• 2: not updated (MMST_U2_NOT_UPDATED) • 3: roaming not allowed (MMST_U3_ROAMING_NOT_ALLOWED)
<ms_class>	String	MS GPRS-class. Allowed values: • 0: class A • 1: class B • 2: class C • 3: class CG: class C in GPRS only mode • 4: class CC: class C in circuit switched only mode (lowest class)
<limited_service>	Number	Limited service information. Allowed values: • 0: no limited service • 1: limited Service
<ready_state>	Number	MM READY state. Allowed values: • 0: not in ready state • 1: in ready state
<active_timer_bitmap>	Number	Bitmap of the active MM timers: T3302, T3310, T3311, T3312, T3314, T3321, T3330. T3302 is the least significant bit and T3330 the most significant bit The bitmap values are presented in hexadecimal format (the range goes from 0x000 0 to 0x007F)
<cell_reselection_total>	Number	Total number of cell reselections. Range 0 - 65535.
<ir_cell_reselection_counter>	Number	Number of inter-rat cell reselections. Range 0 - 65535.
<attempted_ir_cell_reselction>	Number	Number of attempts of inter-rat cell reselections. Range 0 - 65535.
<ir_handover>	Number	Number of inter-rat handovers. Range 0 - 65535.
<attempted_ir_handover>	Number	Number of attempts of inter-rat handovers. Range 0 - 65535.
<eplmn_index>	Number	Progressive index of displayed EPLMN. Range 1 - 16.
<cell_index>	Number	Progressive index of displayed cell. Range 1 - 32.

LTE parameters:

Parameter	Type	Description
<PhysCellID>	Number	Physical cell ID; valid range: 0 - 503.
<TAC>	Number	Tracking area code; valid range: 0 - 0xFFFF.
<RSRP>	Number	The average Reference Signal Received Power of the LTE cell over last measurement period; valid range: 0 - 97.
<RSRQ>	Number	The average Reference Signal Received Quality of the LTE cell over last measurement period; valid range: 0 - 34.
<TA>	Number	Timing advance information: • In RRC_IDLE state, the value of timing advance (TA) is updated from the Random-Access-Response message; its valid range: 0 - 1282. • In RRC_CONNECTED state, the value of timing advance (TA) is updated from the MAC control element; its valid range: 0 - 63.
<TA_type>	Number	The indication of RRC STATE when TA updated, allowed values: • 0: indicating no timing advance available • 1: indicating the RRC STATE in RRC_IDLE • 2: indicating the RRC STATE in RRC_CONNECTED
<EARFCN>	Number	The carrier frequency of the LTE cell designated by the EUTRA Absolute Radio Frequency Channel Number (EARFCN); valid range: 0 - 0xFFFF.
<num_measured_EUTRA>	Number	Number of E-UTRA neighbor cell measurements; valid range: 0 - 32.

7.24.4 Notes

LARA-R2 / TOBY-R2

- <mode>=5, 6, 133 and 134 are not supported.

SARA-U2 / LISA-U2 / LISA-U1

- <mode>=5, 6, 133 and 134 are not supported.

LISA-U200-00S / LISA-U200-01S / LISA-U200-02S / LISA-U200-52S / LISA-U200-62S / LISA-U230 / LISA-U260 / LISA-U270

- <mode>=128, 129, 130, 131, 132, 133 and 134 are not supported.
- The <details> parameter is not supported.

LISA-U200-01S / LISA-U200-02S / LISA-U200-52S / LISA-U200-62S / LISA-U230 / LISA-U260 / LISA-U270

- The SIM verification is needed.

LISA-U200-00S / LISA-U200-01S / LISA-U230 / LISA-U260-01S / LISA-U270-01S

- The set command can be issued when the module is not registered to the network.

LISA-U1

- <mode>=128, 129, 130, 131, 132, 133 and 134 are not supported.
- The <details> parameter is not supported.

SARA-U260-00S / SARA-U270-00S / SARA-U270-00X / SARA-U280-00S

- <mode>=128, 129, 130, 131, 132, 133 and 134 are not supported.

SARA-G3 / LEON-G1

- The <details> and <rat> parameters are not supported.
- The <Arfcn_ded> parameter can assume also the value "INVALID_ARFCN".

SARA-G300 / SARA-G310 / SARA-G340-00S / SARA-G340-01S / SARA-G350-00S / SARA-G350-00X / SARA-G350-01B / SARA-G350-01S / LEON-G100-06S

- <mode>=128, 129, 130, 131, 132, 133 and 134 are not supported.

7.25 Neighbour cells configuration +UDCONF=83

+UDCONF=83						
Modules	SARA-G340-02S SARA-G340-02X SARA-G350-02A SARA-G350-02S SARA-G350-02X SARA-G350-53S					
Attributes	**Syntax**	**PIN required**	**Settings saved**	**Can be aborted**	**Response time**	**Error reference**
	full	No	No	No	-	+CME Error

7.25.1 Description

Configures the number of neighbour cells which information will be reported in the information text response of the AT+CGED=0 / AT+CGED=1 / AT+CGED=5 / AT+CGED=6 / AT+CGED=128 AT+CGED=129 / AT+CGED=133 / AT+CGED=134 set command.

7.25.2 Syntax

Type	Syntax	Response	Example
Set	AT+UDCONF=83,<max_2g_ncells>	OK	AT+UDCONF=83,6 OK
Read	AT+UDCONF=83	+UDCONF: 83,<max_2g_ncells> OK	+UDCONF: 83,6 OK

7.25.3 Defined values

Parameter	Type	Description
<max_2g_ncells>	Number	Indicates the number of neighbour cells to be reported. The range goes from 0 to 32. The default value is 32. In the dedicated-mode the <max_2g_ncells> setting will be limited to 6 cells.

7.26 Channel and network environment description +UCGED

+UCGED						
Modules	TOBY-L2 MPCI-L2					
Attributes	**Syntax**	**PIN required**	**Settings saved**	**Can be aborted**	**Response time**	**Error reference**
	partial	No	No	No	-	+CME Error

7.26.1 Description

Enables the protocol stack and network environment information collection.

The information text response of the read command reports only the current RAT (if any) parameters, determined by the <rat> parameter value.

Table 6 lists the supported <mode> parameter values:

Channel	<mode>=0	<mode>=2	<mode>=3	<mode>=5
TOBY-L2	*	*		
MPCI-L2	*	*		
TOBY-L200-00S TOBY-L210-00S	*	*	*	
MPCI-L200-00S MPCI-L210-00S	*	*	*	

Table 6: <mode> parameter applicability

☞ <tti_bundling> is supported only by these products:
TOBY-L210-62S;

7.26.2 Syntax

Type	Syntax	Response	Example
Set	AT+UCGED=<mode>	[+UCGED: <svc> <arfcn>,<Gmcc>,<Gmnc>,<GcellId>,<BSIC>,<rxlev> <uarfcn>,<Wband>,<Wmcc>,<Wmnc>,<WcellId>,<Wrrc>,<rssi>,<ecn0_lev> <earfcn>,<Lband>,<ul_BW>,<dl_BW>,<Lmcc>,<Lmnc>,<tac>,<LcellId>,<P-CID>,<rsrp>,<rsrq>,<Lsinr>,<Lrrc>] OK	AT+UCGED=2 OK AT+UCGED=3 +UCGED: 0 65535,fff,fff,0000,ff,99 10588,1,222,88,1281d24,255,11,40 65535,255,255,255,fff,fff,ffff,0000000,65535,255,255,255,255 OK AT+UCGED=5 OK
Read	AT+UCGED?	**<mode>= 0:** +UCGED: 0 OK	+UCGED: 0 OK
		<mode>= 2, <rat>= 2: +UCGED: 2 2,<svc>,<MCC>,<MNC> <arfcn>,<band1900>,<GcellId>,<BSIC>,<Glac>,<Grac>,<rxlev>,<grr>,<t_adv>,<Gspeech_mode> OK	+UCGED: 2 2,4,001,01 810,1,0000,01,0000,80,63,255,255,255 OK
		<mode>= 2, <rat>= 3: +UCGED: 2 3,<svc>,<MCC>,<MNC> <uarfcn>,<Wband>,<WcellId>,<Wlac>,<Wrac>,<scrambling_	+UCGED: 2 3,4,001,01 4400,5,0000000,0000,80,9,4,62,42,255 OK

Type	Syntax	Response	Example
		code>,<Wrrc>,<rssi>,<ecn0_lev>, <Wspeech_mode> OK	
		<mode>= 2, <rat>= 4: +UCGED: 2 4,<svc>,<MCC>,<MNC> <earfcn>,<Lband>,<ul_BW>, <dl_BW>,<tac>,<LcellId>,<P-CID>,<mTmsi>,<mmeGrId>, <mmeCode>, <rsrp>,<rsrq>, <Lsinr>,<Lrrc>,<RI>,<CQI>, <avg_rsrp>,<totalPuschPwr>, <avgPucchPwr>,<drx>, <l2w>, <volte_mode>[,<meas_gap>,<tti_bundling>] OK	+UCGED: 2 4,0,001,01 2525,5,25,50,2b67,69f6bc7,111,00000000,ffff,ff,67,19,0.00,255,255,255,67,11,255,0,255,255,0,0 OK
		<mode>= 2, <rat>= 5: +UCGED: 2 5,<svc> OK	+UCGED: 2 5,1 OK
		<mode>= 0: +UCGED: MODE_5_DISABLED OK	+UCGED: MODE_5_DISABLED OK
		<mode>= 5: +RSRP: <P-CID>,<earfcn>, "<RSRP>", +RSRQ: <P-CID>,<earfcn>, "<RSRQ>", OK	+RSRP: 162,5110,"-075.00", +RSRQ: 162,5110,"-14.20", OK
Test	AT+UCGED=?	+UCGED: (list of supported <mode>s) OK	+UCGED: (0,2) OK

7.26.3 Defined values

Parameter	Type	Description
<mode>	Number	• 0: reporting disabled • 2: short form reporting enabled • 3: retrieve the short form text information report • 5: RSRP and RSRQ reporting enabled
<rat>	Number	Current Radio Access Technology: • 2: 2G • 3: 3G • 4: 4G • 5: unknown. The parameter is set to a 5 until a network information update is not successfully performed through +UCGED=2 or when the MT is set to minimum functionality (+CFUN=4, +CFUN=19).
<svc>	Number	Current radio service state: • 0: not known or not detectable • 1: radio off • 2: searching • 3: no service • 4: registered The radio service state is updated at each change from a valid network service state (2G, 3G or 4G) to another valid network service state (2G, 3G or 4G). To retrieve the

Parameter	Type	Description
		network registration status information refer to +CREG, +CGREG and +CEREG AT commands.
<MCC>	Number	Mobile Country Code; the range is 0-999 (3 digits), FFF if not known or not detectable.
<MNC>	Number	Mobile Network Code; the range is 0-999 (1 to 3 digits), FFF if not known or not detectable.
<arfcn>	Number	Absolute Radio Frequency Channel Number (ARFCN); the range is 0-1023, 65535 if not known or not detectable.
<band1900>	Number	Indicates whether the given <arfcn> in the range 512-810 is part of band 1900 or not, to avoid ambiguity between bands 1800 and 1900: • 0: the given <arfcn> is not part of band 1900 • 1: the given <arfcn> is part of band 1900
<GcellId>	Number	GERAN Cell Identifier (CI) in hexadecimal format; the range is 0h-FFFFh (2 octets).
<BSIC>	Number	Base Station Identity Code (BSIC) of the GERAN cell in hexadecimal format; the range is 0h-3Fh (6 bits), FF if not known or not detectable.
<Glac>	Number	Two bytes location area of the GERAN cell in hexadecimal format; FFFF if not known or not detectable.
<Grac>	Number	One byte routing area of the GERAN cell in hexadecimal format; FF if not known or not detectable.
<rxlev>	Number	GERAN cell Received Signal Strength Indicator (RSSI) index as defined in 3GPP TS 45.008 [28]: • 0: less than -110 dBm • 1..62: from -110 to -48 dBm with 1 dBm steps • 63: -48 dBm or greater • 255: not known or not detectable
<grr>	Number	Reserved for future use.
<t_adv>	Number	Reserved for future use.
<Gspeech_mode>	Number	Reports the latest obtained value of the GSM speech code. Allowed values: • 0: GSM Enhanced Full Rate (12.2 kb/s) • 1: GSM Full Rate (13.0 kb/s) • 2: GSM Half Rate (5.6 kb/s) • 3..10: AMR NB FR (from 4.75 kb/s to 12.2 kb/s) the value indicates the first codec type chosen from the DUT; see the corresponding value of <Wspeech_mode> parameter for the baud rate mapping • 3..8: AMR NB HR (from 4.75 kb/s to 7.95 kb/s) the value indicates the first codec type chosen from the DUT; see the corresponding value of <Wspeech_mode> parameter for the baud rate mapping • 11..13: AMR WB FR (from 6.60 kb/s to 12.65 kb/s) the value indicates the first codec type chosen from the DUT; see the corresponding value of <Wspeech_mode> parameter for the baud rate mapping • 255: not known or not detectable See 3GPP TS 26.201 [113] for more details on GSM codecs used during a voice call In case a set of speech codecs is assigned by the network, then the parameter reports the lowest one and this one is not necessary the one used.
<uarfcn>	Number	UTRAN Absolute Radio Frequency Channel Number (UARFCN); the range is 1537-10 838, 65535 if not known or not detectable.
<Wband>	Number	UTRAN band: • 1: band 1 (2 GHz) • 2: band 2 (1900 MHz) • 4: band 4 (2100 MHz) • 5: band 5 (800 MHz) • 8: band 8 (900 MHz) • 255: not known or not detectable
<WcellId>	Number	UTRAN CI (cell identifier) in hexadecimal format; the range is 0h-FFFFFFFh (28 bits), 0000000 if not known or not detectable.
<Wlac>	Number	Two bytes location area of the UTRAN cell in hexadecimal format; FFFF if not known or not detectable.
<Wrac>	Number	One byte routing area of the GERAN cell in hexadecimal format; FF if not known or not detectable.
<scrambling_code>	Number	Primary Scrambling Code; range 0-512, 0 if not known or not detectable.

Parameter	Type	Description
<Wrrc>	Number	3G RRC state: • 0: idle • 1: URA_PCH • 2: CELL_PCH • 3: CELL_FACH • 4: CELL_DCH • 255: not known or not detectable
<rssi>	Number	UTRAN cell Received Signal Strength Indicator as defined in 3GPP TS 25.133 [106]: • 0: less than -100 dBm • 1..75: from -100 to -25 dBm with 1 dBm steps • 76: -25 dBm or greater • 255: not known or not detectable
<ecn0_lev>	Number	UTRAN cell Ratio of received energy per PN chip to the total received power spectral density as defined in 3GPP TS 25.133 [106]: • 0: less than -24 dB • 1..48: from -24 dB to 0 dB with 0.5 dB steps • 49: 0 dB or greater • 255: not known or not detectable
<Wspeech_mode>	Number	Reports the latest obtained value of the UMTS speech code. Allowed values: • 3: AMR NB (4.75 kb/s) • 4: AMR NB (5.15 kb/s) • 5: AMR NB (5.90 kb/s) • 6: AMR NB (6.70 kb/s) • 7: AMR NB (7.40 kb/s) • 8: AMR NB (7.95 kb/s) • 9: AMR NB (10.2 kb/s) • 10: AMR NB (12.2 kb/s) • 11: AMR WB (6.60 kb/s) • 12: AMR WB (8.85 kb/s) • 13: AMR WB (12.65 kb/s) • 14: AMR WB (14.25 kb/s) • 15: AMR WB (15.85 kb/s) • 16: AMR WB (18.25 kb/s) • 17: AMR WB (19.85 kb/s) • 18: AMR WB (23.05 kb/s) • 19: AMR WB (23.85 kb/s) • 255: not known or not detectable See 3GPP TS 26.201 [113] for more details on UMTS codecs used during a voice call. In case a set of speech codecs is assigned by the network, then the parameter reports the lowest one and this one is not necessary the one used.
<earfcn>	Number	E-UTRAN Absolute radio frequency channel number; the range is 0-6449, 65535 if not known or not detectable.
<Lband>	Number	E-UTRAN band (see 3GPP TS 36.101 Table 5.5-1 [99]); the range is 0-44, 255 if not known or not detectable.
<ul_BW>	Number	Number of Uplink Resource Blocks (see 3GPP TS 36.101 Table 5.6-1 [99]), 255 if not known or not detectable.
<dl_BW>	Number	Number of Downlink Resource Blocks (see 3GPP TS 36.101 Table 5.6-1 [99]), 255 if not known or not detectable.
<tac>	Number	E-UTRAN cell Tracking area code in hexadecimal format; the range is 0h-FFFFh (2 octets), FFFF if not known or not detectable.
<LcellId>	Number	E-UTRAN CI (cell identifier) in hexadecimal format; the range is 0h-FFFFFFFh (28 bits), 0000000 if not known or not detectable.
<P-CID>	Number	E-UTRAN cell Physical Cell ID; the range is 0-503, 65535 if not known or not detectable.
<mTmsi>	Number	4 bytes MME Temporary Mobile Subscriber Identity in hexadecimal format; 0000000 0 if not known or not detectable.
<mmeGrId>	Number	2 bytes MME Group Identifier in hexadecimal format; FFFF if not known or not detectable.

Parameter	Type	Description
<mmeCode>	Number	1 byte MME Code in hexadecimal format; FF if not known or not detectable.
<rsrp>	Number	Reference Signal Received Power (RSRP) as defined in 3GPP TS 36.133 [105]: • 0: less than -140 dBm • 1..96: from -140 dBm to -44 dBm with 1 dBm steps • 97: -44 dBm or greater • 255: not known or not detectable
<rsrq>	Number	Reference Signal Received Quality (RSRQ) as defined in 3GPP TS 36.133 [105]: • 0: less than -19.5 dB • 1..33: from -19.5 dB to -3 dB with 0.5 dB steps • 34: -3 dB or greater • 255: not known or not detectable
<Lsinr>	Number	E-UTRAN Signal to Interference and Noise ratio in dB. The range goes from -15,88 to 15,88; 255 if not known or not detectable.
<Lrrc>	Number	4G RRC state: • 0: null • 1: IDLE • 2: ATTEMPT TO CONNECT • 3: CONNECTED • 4: LEAVING CONNECTED STATE • 5: ATTEMPT LEAVING E-UTRA • 6: ATTEMPT ENTERING E-UTRA • 255: not known or not detectable
<RI>	Number	Rank Indicator value; 255 if not known or not detectable. It is updated every 480 ms with the value which has been most often reported to the network in the previous 480 ms period. See 3GPP TS 36.213 [130] section 7.2 and 3GPP TS 36.212 [131] section 5.2.2.6 for more details.
<CQI>	Number	Channel Quality Indicator value; 255 if not known or not detectable. It is updated every 480 ms with the value which has been most often reported to the network in the previous 480 ms period. See 3GPP TS 36.213 [130] section 7.2 for more details.
<avg_rsrp>	Number	Average value of last 10th Reference Signal Received Power (RSRP).
<totalPuschPwr>	Number	Mobile output power for PUSCH transmission averaged over 480 ms in dBm; 255 if not known or not detectable.
<avgPucchPwr>	Number	Mobile output power for PUCCH transmission averaged over 480 ms in dBm; 255 if not known or not detectable.
<drx>	Number	Discontinuous Reception "drx-Inactivity-Timer" value in ms; 0 if not known or not detectable.
<l2w>	Number	SIB3 LTE to WCDMA reselection criteria: (threshServingLow)x2 +(q-RxLevMin)x2; 255 if not known or not detectable.
<volte_mode>	Number	Reserved for future use.
<meas_gap>	Number	Measurement gap configuration: • 0: disabled • 40: 40 ms measurement gap repetition period corresponding to the measurement gap pattern ID 0 (see Table 8.1.2.1-1 of 3GPP TS 36.133 [105]) • 80: 80 ms measurement gap repetition period corresponding to the measurement gap pattern ID 1 (see Table 8.1.2.1-1 of 3GPP TS 36.133 [105])
<tti_bundling>	Number	TTi (Transmission Time interval) bundling status: • 0: off • 1: on
<RSRP>	String	Reference Signal Received Power (RSRP) as defined in 3GPP TS 36.133 [105] expressed in dBm
<RSRQ>	String	Reference Signal Received Quality (RSRQ) as defined in 3GPP TS 36.133 [105] expressed in dB

7.26.4 Notes

TOBY-L200-02S / TOBY-L200-03A / TOBY-L200-03S / TOBY-L210-02S / TOBY-L210-03A / TOBY-L210-03S / TOBY-L220 / TOBY-L280 / MPCI-L200-02S / MPCI-L200-03S / MPCI-L210-02S / MPCI-L210-03S / MPCI-L220 / MPCI-L280

- <meas_gap> and <tti_bundling> parameters are not supported.

- In order to report the speech codec value the AT+UCGED=2 command must be issued before starting a voice call and the audio codec enabling to the UE. To cater also for MT calls, AT+UCGED=2 should be set at the module boot or after the network registration.

TOBY-L210-62S

- In order to report the speech codec value the AT+UCGED=2 command must be issued before starting a voice call and the audio codec enabling to the UE. To cater also for MT calls, AT+UCGED=2 should be set at the module boot or after the network registration.

TOBY-L201 / MPCI-L201

- The values provided by the <Gspeech_mode> and <Wspeech_mode> parameters must not be considered.
- <meas_gap> and <tti_bundling> parameters are not supported.

TOBY-L200-00S / TOBY-L210-00S / TOBY-L210-60S / MPCI-L200-00S / MPCI-L210-00S / MPCI-L210-60S

- The command is supported with partial functionality and a limited range for testing purposes only.
- The read command syntax not compatible.
- <mode>=3 is allowed only if short form reporting is enabled, i.e. <mode>=2 previously set.
- <meas_gap> and <tti_bundling> parameters are not supported.

TOBY-L220-62S / MPCI-L220-62S

- <meas_gap>=2, 3 are not supported.

7.27 Provide cell information +UCELLINFO

+UCELLINFO						
Modules	LARA-R2 TOBY-R2					
	SARA-U2 LISA-U2 LISA-U1					
Attributes	**Syntax**	**PIN required**	**Settings saved**	**Can be aborted**	**Response time**	**Error reference**
	partial	No	No	No	< 5 s	+CME Error

7.27.1 Description

Provides diagnostic information on the GSM, UMTS or LTE serving cell and on the neighbour cells. This information can be retrieved in two ways:

- Periodic reporting: it is started by enabling URC reporting with the set command; if the module is camped on a PLMN (regardless of its registration status), URCs periodically convey the main attributes of the serving cell and of the neighbour cells.
- One-shot query: it is triggered by issuing the read command.

7.27.2 Syntax

Type	Syntax	Response	Example
Set	AT+UCELLINFO=<mode>	OK	AT+UCELLINFO=1 OK
Read	AT+UCELLINFO?	**2G cells:** +UCELLINFO: <mode>,<type>,<MCC>,<MNC>,<LAC>,<CI>,<RxLev>[,<t_adv>[,<ch_type>,<ch_mode>]] OK	+UCELLINFO: 0,0,222,1,D5BD,5265,36,1,255,255 OK
		3G cells: +UCELLINFO: <mode>,<type>,<MCC>,<MNC>,<LAC>,<CI>,<scrambling_code>,<dl_frequency>,<rscp_lev>,<ecn0_lev>[,<rrc_state>] OK	+UCELLINFO: 0,2,222,1,EF8D,52D2388,49,10638,16,38,"ID" OK
		4G serving cell:	+UCELLINFO: 0,5,222,1,179291197,121,15011,26,18,0

Type	Syntax	Response	Example
		+UCELLINFO: <mode>,<type>,<MCC>,<MNC>,<CI>,<PhysCellID>,<TAC>,<RSRP>,<RSRQ>,<TA> OK	OK
		4G neighbour cells: +UCELLINFO: <mode>,<type>,<EARFCN>,<PhysCellID>,<RSRP>,<RSRQ> OK	+UCELLINFO: 1,6,6400,200,27,18 OK
Test	AT+UCELLINFO=?	+UCELLINFO: (list of supported <mode>s) OK	+UCELLINFO: (0-1) OK
URC		**2G cells:** +UCELLINFO: <mode>,<type>,<MCC>,<MNC>,<LAC>,<CI>,<RxLev>[,<t_adv>[,<ch_type>,<ch_mode>]]	+UCELLINFO: 1,1,222,1,D5BD,5266,22
		3G cells: +UCELLINFO: <mode>,<type>,<MCC>,<MNC>,<LAC>,<CI>,<scrambling_code>,<dl_frequency>,<rscp_lev>,<ecn0_lev>[,<rrc_state>]	+UCELLINFO: 1,2,222,1,EF8D,52D2388,49,10638,18,35,"ID"
		4G serving cell: +UCELLINFO: <mode>,<type>,<MCC>,<MNC>,<4gCI>,<PhysCellID>,<TAC>,<RSRP>,<RSRQ>,<TA>	+UCELLINFO: 1,5,222,1,179291197,121,15011,26,18,0
		4G neighbour cells: +UCELLINFO: <mode>,<type>,<EARFCN>,<PhysCellID>,<RSRP>,<RSRQ>	+UCELLINFO: 1,6,6400,200,27,18

7.27.3 Defined values

Parameter	Type	Description
<mode>	Number	• 0: periodic reporting disabled • 1: periodic reporting enabled
<type>	Number	For 2G cells: • 0: 2G serving cell • 1: neighbour 2G cell For 3G cells: • 2: 3G serving cell or cell belonging to the Active Set • 3: neighbour 3G cell • 4: detected 3G cell For 4G cells: • 5: 4G serving cell • 6: neighbour 4G cell
<MCC>	Number	See +CGED command description
<MNC>	Number	See +CGED command description
<LAC>	Number	See +CGED command description
<CI>	Number	See +CGED command description
<4gCI>	Number	LTE Cell identity in decimal notation. Range 0 - 4294967295
<RxLev>	Number	See +CGED command description
<t_adv>	Number	See +CGED command description
<ch_type>	Number	See +CGED command description
<ch_mode>	Number	See +CGED command description

Parameter	Type	Description
<scrambling_code>	Number	See +CGED command description
<dl_frequency>	Number	See +CGED command description
<rscp_lev>	Number	See +CGED command description
<ecn0_lev>	Number	See +CGED command description
<rrc_state>	String	See +CGED command description
<EARFCN>	Number	See +CGED command description
<PhysCellID>	Number	See +CGED command description
<TAC>	Number	See +CGED command description
<RSRP>	Number	See +CGED command description
<RSRQ>	Number	See +CGED command description
<TA>	Number	See +CGED command description

7.27.4 Notes

If the MT is 3G registered with an active radio connection (CELL_DCH):

- <MCC>, <MNC>, <LAC> and <CI> will be always invalid for 3G cells belonging to Active Set or Detected Set.
- The 3G serving cell data could be outdated. Use the Active Set data for any information regarding involved cells in the current radio connection.

SARA-U2 / LISA-U2 / LISA-U1

- The parameters <EARFCN>, <PhysCellID>, <TAC>, <RSRP>, <RSRQ>, <TA> are not supported.

SARA-U260-00S / SARA-U270-00S / SARA-U270-00X / SARA-U280-00S / LISA-U200-00S / LISA-U200-01S / LISA-U200-02S / LISA-U200-52S / LISA-U200-62S / LISA-U230 / LISA-U260 / LISA-U270 / LISA-U1

- The parameters <ch_type>, <ch_mode>, <rrc_state> are not supported.

7.28 Lock on a specific cell +UCELLLOCK

+UCELLLOCK						
Modules	TOBY-L200-02S TOBY-L200-03A TOBY-L200-03S TOBY-L210-02S TOBY-L210-03A TOBY-L210-03S TOBY-L210-62S TOBY-L220 TOBY-L280 MPCI-L200-02S MPCI-L200-03S MPCI-L210-02S MPCI-L210-03S MPCI-L220 MPCI-L280					
	SARA-U2 LISA-U200-02S LISA-U200-03S LISA-U200-52S LISA-U200-62S LISA-U200-83S LISA-U201 LISA-U260-02S LISA-U270-02S LISA-U270-62S LISA-U270-63S LISA-U270-68S					
	SARA-G340 SARA-G350 SARA-G350-53S LEON-G100-07S LEON-G100-08S					
Attributes	**Syntax**	**PIN required**	**Settings saved**	**Can be aborted**	**Response time**	**Error reference**
	full	No	No	No	-	+CME Error

7.28.1 Description

Forces the module to lock on a:

- A specific GSM cell only (identified by its BCCH ARFCN)
- A specific UMTS cell only (identified by its UARFCN and PSC)
- A specific GSM or a specific UMTS cell
- A specific LTE cell only (identified by its EARFCN and P-CID)
- A specific GSM or a specific UTMS or a specific LTE cell
- A specific GSM or a specific LTE cell
- A specific UMTS or a specific LTE cell

The feature can work in idle-mode only (basic lock: the reselections are inhibited) and in both idle and connected-mode (extended lock: both the reselections and the handovers are inhibited).

Based on the specified cell(s):

- **GSM only** (set the module in 2G RAT with AT+URAT=0): the user only sets the ARFCN and the module enters a GSM only mode:
  - If any lock is set, the reselections are inhibited in idle-mode and if the specific BCCH ARFCN is not available, the module enters the Out Of Coverage (OOC) state

  - If the extended lock mode is set, the handovers are inhibited in connected-mode
  - Extended redirection lock mode is equivalent to the extended lock mode
- **UMTS only** (set the module in 3G RAT with AT+URAT=2): the user only sets the UARFCN+PSC pair and the module enters a UMTS only mode. The reselections are inhibited and if the specific UARFCN and PSC are not available, the module enters the OOC state
  - In the normal lock mode the UE can leave the locked cell due to the handovers and the radio reconfiguration by the network
  - In the extended lock mode, the handovers are inhibited. The reconfiguration via redirection IEs is still allowed
  - In extended redirection lock mode any reconfiguration via redirection IEs (see 3GPP TS 25.331 [97]) is rejected or ignored
- **LTE only** (set the module in 4G RAT with AT+URAT=3): the user only sets the EUARFCN+P-CID pair and the module enters a LTE only mode. The reselections are inhibited and if the specific EARFCN and P-CID are not available, the module enters the OOC state.
  - In normal lock mode, the UE can leave the locked cell due to the handovers and the radio reconfiguration by the network
  - In extended lock mode, the handovers are inhibited. The reconfiguration via redirection IEs is still allowed
  - In extended redirection lock mode, any reconfiguration via redirection IEs is rejected or ignored
- **GSM and UMTS** (set the module in the automatic 2G/3G RAT with AT+URAT=1,2 or AT+URAT=1,0): the user sets both the ARFCN and the UARFCN, PSC pair to make the module enter dual mode. The module searches for any of the two locking cells and camps on the first cell found. Reselections in idle mode are allowed to the other locking cell only. In connected mode:
  - In normal lock mode, the UE can leave the locked cells due to the handovers and the radio reconfiguration by the network. The Ue cannot leave its RATs
  - In extended lock mode, the handovers are inhibited. The reconfiguration via redirection IEs is still allowed
  - In extended redirection lock mode, any reconfiguration via redirection IEs is rejected or ignored
- **GSM and LTE** (set the module in automatic 2G/4G RAT with AT+URAT=5,3 or AT+URAT=5,0): the user sets both the ARFCN and the EARFCN, P-CID pair to make the module enter dual mode. The module searches for any of the two locking cells and camps on the first cell found. Reselections in idle mode are allowed to the other locking cell only. In connected mode the behaviour is the same of the GSM and UMTS case
- **UMTS and LTE** (set the module in automatic 3G/4G RAT with AT+URAT=6,2 or AT+URAT=6,3): the user sets both the UARFCN,PSC and the EARFCN, P-CID pairs to make the module enter dual mode. The module searches for any of the two locking cells and camps on the first cell found. Reselections in idle mode are allowed to the other locking cell only. In connected mode the behaviour is the same of the GSM and UMTS case
- **GSM, UMTS and LTE** (set the module in automatic 2G/3G/4G RAT with AT+URAT=4,1 or AT+URAT=4,2 or AT+URAT=4,3): the user sets the ARFCN, the UARFCN and PSC, the EARFCN and the P-CID pair to make the module enter tri mode. The module searches for any of the three locking cells and camps on the first cell found. Reselections in idle mode are allowed to the other locking cells only. In connected mode the behaviour is the same of the GSM and UMTS case

☞ SARA-G3 / LEON-G1
The UMTS and dual mode are not available.

☞ SARA-U2 / LISA-U2 / LISA-U1 / SARA-G3 / LEON-G1
LTE, tri mode and any dual mode involving LTE are not available.

☞ The +COPS=5 command can be used to determine the available BCCH ARFCN / UARFCN and PSC / EARFCN and P-CID numbers.

☞ The set command can only be executed when the module is not registered and no registration attempt is in progress.

☞ If the +URAT mode is not compatible with the requested cell(s) type then the command will return an error result code.

☞ If the command is provided with an unsupported UARFCN then the command will return an error result code and the previous configuration will be restored unless the current +URAT mode is not compatible, in which case the cell lock will be disabled.

☞ +COPS=5 and +COPS=? shall not be used when the lock is enabled, because the results would be inconsistent.

7.28.2 Syntax

Type	Syntax	Response	Example
Set	AT+UCELLLOCK=<lock_mode>[,<BCCH_ARFCN>[,<band1900>[,<UARFCN>,<PSC>[,<EARFCN>,<P-CID>]]]]	OK	AT+UCELLLOCK=0 OK AT+UCELLLOCK=2,90 OK AT+UCELLLOCK=2,,,10750,100 OK AT+UCELLLOCK=2,700,1,10750,100 OK AT+UCELLLOCK=2,,,10750,100,300,1 OK
Read	AT+UCELLLOCK?	**GSM/GPRS modules** +UCELLLOCK: [<lock_result>,]<lock_mode>[,<BCCH_ARFCN>,<band1900>] OK	+UCELLLOCK: 0 OK
		HSPA modules +UCELLLOCK: [<lock_result>,<locked_RAT>,]<lock_mode>[,<BCCH_ARFCN>,<band1900>,<UARFCN>,<PSC>] OK	
		LTE modules +UCELLLOCK: [<lock_result>,<locked_RAT>,]<lock_mode>[,<BCCH_ARFCN>,<band1900>,<UARFCN>,<PSC>[,<EARFCN>,<P-CID>]] OK	+UCELLLOCK: 1,1,2,90,0,65535,65535 OK +UCELLLOCK: 1,2,2,65535,0,10750,100 OK +UCELLLOCK: 1,2,2,700,1,10750,100 OK +UCELLLOCK: 1,2,2,700,107500,100,300,1 OK
Test	AT+UCELLLOCK=?	**GSM/GPRS modules** +UCELLLOCK: (list of supported <lock>s),(list of supported <BCCH_ARFCN>s),(list of supported <band1900>s) OK	+UCELLLOCK: (0,2-5),(0-1023),(0,1) OK
		HSPA modules +UCELLLOCK: (list of supported <lock>s),(list of supported <BCCH_ARFCN>s),(list of supported <band1900>s),(list of supported <UARFCN>s),(list of supported <PSC>s) OK	+UCELLLOCK: (0,2-7),(0-1023),(0,1),(1537-10838),(0-511) OK
		LTE modules +UCELLLOCK: (list of supported <lock>s),(list of supported <BCCH_ARFCN>s),(list of supported <band1900>s),(list of supported <UARFCN>s),(list of supported	+UCELLLOCK: (0,2-7),(0-1023),(0,1),(1537-10838),(0-511),(0-9919),(0-503) OK

Type	Syntax	Response	Example
		<PSC>s),(list of supported <EARFCN>s),(list of supported <P-CID>s) OK	
URC		**GSM/GPRS modules** +UCELLLOCK: <lock_result>	+UCELLLOCK: 1 OK
		HSDPA modules +UCELLLOCK: <lock_result>, <locked_RAT>	+UCELLLOCK: 1,1 OK
		LTE modules +UCELLLOCK: <lock_result>, <locked_RAT>	+UCELLLOCK: 1,1 OK

7.28.3 Defined values

Parameter	Type	Description
<lock_mode>	Number	Action configuration: • 0: lock disabled • 2: lock enabled without URC • 3: lock enabled with URC • 4: extended lock enabled without URC • 5: extended lock enabled with URC • 6: extended redirection lock enabled without URC • 7: extended redirection lock enabled with URC
<BCCH_ARFCN>	Number	Indicates on which cell (BCCH ARFCN) to perform the lock (range 0-1023 if <band1900> is 0; 512-810 if <band1900> is 1). A value of 65535 is invalid and it is present in the read output if the ARFCN has not been set.
<band1900>	Number	Indicates whether the given <BCCH_ARFCN> is part of band 1900 or not, to avoid ambiguity between bands 1800 and 1900: • 0(default value): the given <BCCH_ARFCN> is not part of band 1900 • 1: the given <BCCH_ARFCN> is part of band 1900
<UARFCN>	Number	Indicates the UARFCN to perform the lock on (range 1537-10838). A value of 65535 is invalid and it is present in the read output if the UARFCN has not been set. This parameter is equivalent to <dl_frequency> parameter in +CGED and +UCELLINFO commands.
<PSC>	Number	Indicates the Primary Scrambling Code of the locked cell (range 0-511). A value of 65535 is invalid and it is present in the read output if the PSC has not been set.
<EARFCN>	Number	Indicates the EARFCN to perform the lock on (range is 0-9919). A value of 65535 is invalid and it is present in the read output if the EARFCN has not been provided.
<P-CID>	Number	Indicates the Physical Cell Id of the locked cell (range 0-503). A value of 65535 is invalid and it is present in the read output if the P-CID has not been provided.
<lock_result>	Number	Result of the last issued lock: • 1: lock enabled and successful, camped on the requested cell • 2: lock enabled but unsuccessful, the requested cell was not found
<locked_RAT>	Number	Current locked RAT: • 1: GSM • 2: UMTS • 3: LTE

7.28.4 Notes

- If <lock_mode>=0, the <BCCH_ARFCN>, <band1900>, <UARFCN> and <PSC>, <EARFCN> and <P-CID> parameters are not used.
- If <lock_mode> differs from 0, the <BCCH_ARFCN>, <UARFCN> + <PSC> or the <EARFCN> + <P-CID> parameters are mandatory.
- If <band1900> is issued, <BCCH_ARFCN> is mandatory.
- The printed list of supported <UARFCN> reports only the theoretical minimum and maximum UARFCN for readability sake. The supported band ranges and additional frequencies are product dependent. The supported UARFCN list is the following (based on 3GPP TS 25.101 [64] ch 5.4.4 - Table 5.2):

Operating band	Frequency band	Min UARFCN	Max UARFCN	Additional UARFCNs
Band I	2100	10562	10838	-
Band II	1900	9662	9938	412, 437, 462, 487, 512, 537, 562, 587, 612, 637, 662, 687
Band IV	1700	1537	1738	1887, 1912, 1937, 1962, 1987, 2012, 2037, 2062, 2087
Band V	850	4357	4458	1007, 1012, 1032, 1037, 1087
Band VI	800	4387	4413	1037, 1062
Band VIII	900	2937	3088	-

Table 7: Supported UARFCN list

- The printed list of supported <EARFCN>'s reports only the theoretical minimum and maximum EARFCN for readability's sake. The supported band ranges and additional frequencies are product dependent. The supported EARFCN list is the following (based on 3GPP TS 36.101 [98] ch 5.7.3 - Table 5.7.3-1):

Operating band	Frequency band	Min EARFCN	Max EARFCN
Band 1	2100	0	599
Band 2	1900	600	1199
Band 3	1800	1200	1949
Band 4	1700	1950	2399
Band 5	850	2400	2649
Band 7	2600	2750	3449
Band 8	900	3450	3799
Band 17	700	5730	5849
Band 19	800	6000	6149
Band 20	800	6150	6449
Band 21	1500	6450	6599

Table 8: Supported EARFCN list

- If <lock_mode>=0, the read command's information text response only displays the <lock_mode> parameter.
- If <lock_result>=2, the module is not in normal mode of operation, and persist in OOC state until <lock_mode>=0 is set or camps on the selected <BCCH_ARFCN> or <UARFCN> and <PSC> or <EARFCN> and <P-CID> (in the latter case the URC with <lock_result>=2 is displayed).
- If <lock_result>=2 and if the lock has been set two or more RATs then the <locked_RAT> is meaningless and should not be considered.

TOBY-L2 / MPCI-L2

- <lock_mode>=4, 5, 6 and 7 are not supported.

SARA-U2 / LISA-U2 / LISA-U1

- <EARFCN> and <P-CID> are not supported.
- <locked_RAT>=3 is not supported.

SARA-G3 / LEON-G1

- <lock_mode>=6 and 7 are not supported.
- <locked_RAT>, <EARFCN> and <P-CID>, <UARFCN>, <PSC> are not supported.

7.29 Wireless service selection +WS46

+WS46						
Modules	TOBY-L2 MPCI-L2					
	LARA-R2 TOBY-R2					
	SARA-U2 LISA-U2 LISA-U1					
Attributes	**Syntax**	**PIN required**	**Settings saved**	**Can be aborted**	**Response time**	**Error reference**
	full	No	No	No	-	+CME Error

7.29.1 Description

Select the cellular service (Wireless Data Service; WDS) to operate with the MT according to PCCA STD-101 [87]. PCCA calls the WDS-Side Stack Selection. The command may be used when the MT is asked to indicate the wireless services in which it can operate.

☞ u-blox cellular modules are certified according to all the capabilities and options stated in the Protocol Implementation Conformance Statement document (PICS) of the module. The PICS, according to 3GPP TS 51.010-2 [84], 3GPP TS 34.121-2 [85], 3GPP TS 36.521-2 [115] and 3GPP TS 36.523-2 [116], is a statement of the implemented and supported capabilities and options of a device. If the user changes the command settings during the certification process, the PICS of the application device integrating a u-blox cellular module must be changed accordingly.

7.29.2 Syntax

Type	Syntax	Response	Example
Set	AT+WS46=[<n>]	OK	AT+WS46=25 OK
Read	AT+WS46?	+WS46: <n> OK	+WS46: 25 OK
Test	AT+WS46=?	+WS46: (list of supported <n>s) OK	+WS46: (12,22,25) OK

7.29.3 Defined values

Parameter	Type	Description
<n>	Number	WDS-Side stack selection indication and may be: • 12: GERAN only (single mode GSM) • 22: UTRAN only (single mode UMTS) • 25: GERAN, UTRAN and E-UTRAN • 28: E-UTRAN only (single mode LTE) • 29: GERAN and UTRAN • 30: GERAN and E-UTRAN • 31: UTRAN and E-UTRAN

7.29.4 Notes

- It is possible to configure the WDS-Side stack only when is not registered on the wireless service.
- The +URAT command provides extended functionalities with respect to +WS46 command.

TOBY-L2 / MPCI-L2

- The command returns the "OK" final result code and the current values but no action is actually performed.

TOBY-R200

- The factory-programmed value of <n> is 25.

LARA-R202 / LARA-R280 / TOBY-R202

- <n>=12, 25, 29 and 30 are not supported.
- The factory-programmed value of <n> is 31.

LARA-R203 / LARA-R204 / LARA-R220

- <n>=12, 22, 25, 29, 30 and 31 are not supported.
- The factory-programmed value of <n> is 28.

LARA-R211

- <n>=22, 25, 29 and 31 are not supported.
- The factory-programmed value of <n> is 30.

SARA-U2 / LISA-U2 / LISA-U1

- <n>=28, 29, 30, 31 are not supported.
- The factory-programmed value of <n> is 25 (GERAN and UTRAN (dual mode stack)).

SARA-U270-53S / SARA-U270-73S / SARA-U280

- <n>=12, 25 are not supported.
- The factory-programmed value of <n> is 22.

7.30 Service specific access control restriction status +CSSAC

+CSSAC						
Modules	TOBY-L4					
	LARA-R2 TOBY-R2					
Attributes	**Syntax**	**PIN required**	**Settings saved**	**Can be aborted**	**Response time**	**Error reference**
	full	No	No	No	-	+CME Error

7.30.1 Description

Provides the current status of the parameters for SSAC, <BFVoice>, <BFVideo>, <BTVoice> and <BTVideo>. The AT command has no effect on the execution of SSAC. Refers to SSAC (Service Specific Access Control) related information which is used by MMTEL application (see 3GPP TS 24.173 [101]).

7.30.2 Syntax

Type	Syntax	Response	Example
Action	AT+CSSAC	+CSSAC: <BFVoice>,<BFVideo>, <BTVoice>,<BTVideo> OK	
Test	AT+CSSAC=?	OK	OK

7.30.3 Defined values

Parameter	Type	Description
<BFVoice>	Number	Shows the barring factor for MMTEL voice and it is mapped to the BarringFactorForMMTEL-Voice as in Table 9.
<BFVideo>	Number	Shows the barring factor for MMTEL video and it is mapped to the BarringFactorForMMTEL-Video as in Table 10.
<BTVoice>	Number	Shows the barring timer for MMTEL voice and it is mapped to the BarringTimeForMMTEL-Voice as in Table 11.
<BTVideo>	Number	Shows the barring timer for MMTEL video and it is mapped to the BarringTimeForMMTEL-Video as in Table 12.

7.30.4 Notes

-

<BFVoice>	**BarringFactorForMMTEL-Voice as specified in 3GPP TS 24.173 [101]**
0	0
1	0,05
2	0,1
3	0,15
4	0,2

<BFVoice>	BarringFactorForMMTEL-Voice as specified in 3GPP TS 24.173 [101]
5	0,25
6	0,3
7	0,4
8	0,5
9	0,6
10	0,7
11	0,75
12	0,8
13	0,85
14	0,9
15	0,95
16	1

Table 9: Value of BFVoice and its interpretation by MMTEL application

-

<BFVideo>	BarringFactorForMMTEL-Video as specified in 3GPP TS 24.173 [101]
0	0
1	0,05
2	0,1
3	0,15
4	0,2
5	0,25
6	0,3
7	0,4
8	0,5
9	0,6
10	0,7
11	0,75
12	0,8
13	0,85
14	0,9
15	0,95
16	1

Table 10: Value of BFVideo and its interpretation by MMTEL application

-

<BTVoice>	BarringTimeForMMTEL-Voice as specified in 3GPP TS 24.173 [101]
0	0
1	4
2	8
3	16
4	32
5	64
6	128
7	256
8	512

Table 11: Value of BTVoice and its interpretation by MMTEL application

-

<BTVideo>	BarringTimeForMMTEL-Video as specified in 3GPP TS 24.173 [101]
0	0
1	4
2	8
3	16
4	32

<BTVideo>	BarringTimeForMMTEL-Video as specified in 3GPP TS 24.173 [101]
5	64
6	128
7	256
8	512

Table 12: Value of BTVideo and its interpretation by MMTEL application

7.31 Home zone reporting +UHOMEZR

+UHOMEZR						
Modules	LARA-R2 TOBY-R2					
	SARA-U2 LISA-U2 LISA-U1					
Attributes	**Syntax**	**PIN required**	**Settings saved**	**Can be aborted**	**Response time**	**Error reference**
	full	No	No	No	-	+CME Error

7.31.1 Description

Configures the home zone change event reporting. If reporting is enabled, the MT returns URC **+UHOMEZR: <label>** whenever the home zone is changed.

7.31.2 Syntax

Type	Syntax	Response	Example
Set	AT+UHOMEZR=<onoff>	OK	AT+UHOMEZR=1 OK
Read	AT+UHOMEZR?	+UHOMEZR: <onoff> OK	+UHOMEZR: 0 OK
Test	AT+UHOMEZR=?	+UHOMEZR: (list of supported <onoff>s) OK	+UHOMEZR: (0-1) OK
URC		+UHOMEZR: <label>	

7.31.3 Defined values

Parameter	Type	Description
<onoff>	Number	• 0 (default value): disable home zone change event reporting • 1: enable home zone change event reporting
<label>	String	Zone label indication • "HOME": also possible as "home", dependent from network indication • "CITY": zone label

7.32 Jamming detection +UCD

+UCD						
Modules	SARA-U2 LISA-U2 LISA-U1					
	SARA-G340 SARA-G350 SARA-G350-53S LEON-G1					
Attributes	**Syntax**	**PIN required**	**Settings saved**	**Can be aborted**	**Response time**	**Error reference**
	partial	Yes	NVM	No	-	+CME Error

7.32.1 Description

The feature consists in detecting, at radio resource level, an anomalous source of interference and signalling it to the client. The jamming condition occurs when simultaneously:

- The synchronization is lost (i.e. the MT is no longer camped on the serving cell and cannot select any other suitable cell)

- An interference is detected (i.e. the band scan reveals at least n carriers, with power level equal or higher than a specified threshold, on which no synchronization is possible)

If <op_code> is set to 5, 6 and 7 an additional constraint to verify a jamming condition occurrence is added:

- The synchronization is lost and the MT cannot select any other suitable cell of the "user-desired" PLMN. If the synchronization is lost due to the detected interference, and the MT camps and/or registers on a different PLMN, the jamming condition is not cleared as long as the "user-desired" PLMN is not detected or second condition (interference detected) is no longer true.

☞ SARA-G3 / LEON-G1
the "user-desired" PLMN is implicitly defined as:

- The manually selected PLMN (i.e. the <oper> parameter, of +COPS=1,<format>,<oper>), when +COPS=1 is used. After enabling the advanced 2G jamming detection, +COPS=0 must be used to switch back to the automatic network selection.
- The Home PLMN (as read from the IMSI), when +COPS=0 is used

The jamming condition is cleared when any of the above mentioned statements does not hold.

The command configures how jamming is reported. If activated, an unsolicited indication is issued when the jamming condition is entered or released. In particular, the set command configures the URC **+UCD: <active>.**

☞ LISA-U200-00S / LISA-U200-01S / LISA-U230 / LISA-U260-01S / LISA-U270-01S / LISA-U1 / SARA-G3 / LEON-G100-06S
<desired_PLMN> is not supported.

☞ <op_code>=2 returns the <active> value, if and only if the URC has been previously enabled. Otherwise an error result code is provided.

☞ <op_code>=2 does not change the stored <op_code> value.

7.32.2 Syntax

Type	Syntax	Response	Example
General syntax			
Set	AT+UCD=<op_code>[,<min_number_of_2G_carriers>,<rxlev_threshold>,<min_number_of_3G_carriers>,<rssi_threshold>[,<desired_PLMN>]]	[+UCD: <active>] OK	AT+UCD=3,,,10,20 OK
Read	AT+UCD?	+UCD: <op_code>,<min_number_of_2G_carriers>,<rxlev_threshold>,<min_number_of_3G_carriers>,<rssi_threshold> OK	+UCD: 4,10,20,11,25 OK
Jamming disabling			
Set	AT+UCD=0	OK	AT+UCD=0 OK
2G jamming detection			
Set	AT+UCD=1,<min_number_of_2G_carriers>,<rxlev_threshold>	OK	AT+UCD=1,10,60 OK
Read	AT+UCD?	+UCD: 1,<min_number_of_2G_carriers>,<rxlev_threshold> OK	+UCD: 1,10,20 OK
Jamming status			
Set	AT+UCD=2	+UCD: <active> OK	AT+UCD=2 +UCD: 0 OK
3G jamming detection			
Set	AT+UCD=3,,,<min_number_of_3G_carriers>,<rssi_threshold>	OK	AT+UCD=3,,,10,20 OK

Type	Syntax	Response	Example
Read	AT+UCD?	+UCD: 3,,,<min_number_of_3G_carriers>,<rssi_threshold> OK	+UCD: 3,,,11,25 OK
2G and 3G jamming detection			
Set	AT+UCD=4,<min_number_of_2G_carriers>,<rxlev_threshold>,<min_number_of_3G_carriers>,<rssi_threshold>	OK	AT+UCD=4,12,18,10,25 OK
Read	AT+UCD?	+UCD: 4,<min_number_of_2G_carriers>,<rxlev_threshold>,<min_number_of_3G_carriers>,<rssi_threshold> OK	+UCD: 4,10,20,11,25 OK
Advanced 2G jamming detection			
Set	AT+UCD=5,<min_number_of_2G_carriers>,<rxlev_threshold>,,,<desired_PLMN>	OK	AT+UCD=5,30,35 OK
Read	AT+UCD?	+UCD: 5,<min_number_of_2G_carriers>,<rxlev_threshold>,<desired_PLMN> OK	+UCD: 5,10,20,"00115" OK
Advanced 3G jamming detection			
Set	AT+UCD=6,,,<min_number_of_3G_carriers>,<rssi_threshold>,<desired_PLMN>	OK	AT+UCD=6,,,11,25,"22269" OK
Read	AT+UCD?	+UCD: 6,,,<min_number_of_3G_carriers>,<rssi_threshold>,<desired_PLMN> OK	+UCD: 6,,,11,25,"22269" OK
Advanced 2G and 3G jamming detection			
Set	AT+UCD=7,<min_number_of_2G_carriers>,<rxlev_threshold>,<min_number_of_3G_carriers>,<rssi_threshold>,<desired_PLMN>	OK	AT+UCD=7,10,20,11,25,"310456" OK
Read	AT+UCD?	+UCD: 7,<min_number_of_2G_carriers>,<rxlev_threshold>,<min_number_of_3G_carriers>,<rssi_threshold>,<desired_PLMN> OK	+UCD: 7,10,20,11,25,"310456" OK
Test	AT+UCD=?	+UCD: (list of supported <op_code>s),(list of supported <min_number_of_2G_carriers>s),(list of supported <rxlev_threshold>s),(list of supported <min_number_of_3G_carriers>s),(<list of supported <rssi_threshold>s),(list of supported <desired_PLMN>s) OK	+UCD: (0-4),(1-172),(3-63),(1-136),(0-76) OK
URC		+UCD: <active>	+UCD: 3

7.32.3 Defined values

Parameter	Type	Description
<op_code>	Number	Mode of operation of the jamming detection. When enabled, the +UCD URC may be generated: • 0 (factory-programmed value): disabled • 1: 2G jamming detection enabled • 2: interrogation of the <active> value • 3: 3G jamming detection enabled

Parameter	Type	Description
		• 4: 2G and 3G jamming detection enabled • 5: advanced 2G jamming detection enabled • 6: advanced 3G jamming detection enabled • 7: advanced 2G and 3G jamming detection enabled
<min_number_of_2G_carriers>	Number	Number of minimum disturbing carriers. The range goes from 1 to 172. The factory-programmed value is 255.
<rxlev_threshold>	Number	Power level threshold for 2G carriers; see the 3GPP TS 05.08 [28]. The range goes from 3 to 63. The factory-programmed value is 63.
<min_number_of_3G_carriers>	Number	Number of minimum disturbing carriers. The range goes from 1 to 136.
<rssi_threshold>	Number	Power level threshold for 3G carriers. The range goes from 0 to 76.
<desired_PLMN>	String	"user-desired" PLMN in numeric format (MCC and MNC).
<active>	Number	Jamming detection status: • 0: 2G jamming no longer detected • 1: detected the 2G jamming • 2: 3G jamming no longer detected • 3: detected the 3G jamming

7.32.4 Notes

SARA-U2 / LISA-U2 / LISA-U1

- The command setting is not stored in NVM.
- The jamming detection can be enabled / disabled only on one AT interface at a time. Once disabled on that AT interface, it can be enabled on a different one.
- The jamming detection can be independently enabled / disabled on 2G and 3G network.

LISA-U200-00S / LISA-U200-01S / LISA-U230 / LISA-U260-01S / LISA-U270-01S / LISA-U1

- <op_code>=5, <op_code>=6 and <op_code>=7 are not supported.

SARA-G3 / LEON-G1

- <op_code>=3, <op_code>=4, <op_code>=6 and <op_code>=7 are not supported (thus <min_number_of_3G_carriers>, <rssi_threshold> are also not present).
- The range of <min_number_of_2G_carriers> parameter is between 1 and 255. The factory-programmed value is 255.

SARA-G300 / SARA-G310 / SARA-G340-00S / SARA-G340-01S / SARA-G350-00S / SARA-G350-00X / SARA-G350-01B / SARA-G350-01S / LEON-G1

- The command setting is not stored in NVM.

7.33 Smart jamming detection +UJAD

+UJAD						
Modules	TOBY-L4					
Attributes	**Syntax**	**PIN required**	**Settings saved**	**Can be aborted**	**Response time**	**Error reference**
	partial	Yes	NVM	No	-	+CME Error

7.33.1 Description

The feature consists of detecting, at the application level, an anomalous source of interference or jammer installed in the cellular network and signalling it to the client. The jamming condition occurs when simultaneously:

- The synchronization is lost (i.e. the MT is no longer camped on the serving cell and cannot select any other suitable cell)
- An interference is detected (i.e. the band scan reveals radio channels with power levels equal to or higher than a specified threshold)
- On all such carriers, no synchronization is possible

The jamming condition is cleared when any of the above mentioned statements does not hold.

The command does not need to be configured. It automatically sets and adjusts the thresholds for jamming detection based on the environment (number of visible cells and signal levels). For this purpose, the feature periodically performs network scans and signal level measurements on the entire band.

The feature works independently on the RAT. It is recommended to activate the feature while in full cellular functionality (i.e. +CFUN: 1) and in normal service (i.e. if the module is detached via AT+COPS=2, the smart jamming detection algorithm does not start).

If the command is activated, an unsolicited indication is issued when the jamming condition is entered or released.

☞ TOBY-L4
The jamming detection algorithm relies on 2G and 3G signal level measurements, therefore the feature does not work if the module is set into LTE single mode (e.g via +URAT AT command).

☞ The read command returns the <active> value, if and only if the URC has been previously enabled.

7.33.2 Syntax

Type	Syntax	Response	Example
Set	AT+UJAD=<op_code>	OK	AT+UJAD=1 OK
Read	AT+UJAD?	+UJAD: <op_code>[,<active>] OK	**If jamming detection disabled:** +UJAD: 0 OK **If jamming detection enabled:** +UJAD: 1,0 OK
Test	AT+UJAD=?	+UJAD: (list of supported <op_code>s) OK	+UJAD: (0-1) OK
URC		+UJAD: <active>	+UJAD: 1

7.33.3 Defined values

Parameter	Type	Description
<op_code>	Number	Jamming detection operation mode. Allowed values: • 0 (default and factory-programmed value): smart jamming detection disabled • 1: smart jamming detection enabled; the +UJAD URC may be generated
<active>	Number	Jamming detection status: • 0: jamming not detected • 1: jamming detected • 2: jamming unknown

7.33.4 Notes

- An error result code is provided in the following cases:
  - <op_code> value is out of range
  - Attempt to enable/disable the smart jamming detection when it is already enabled/disabled

TOBY-L4

- The command setting is not stored in the NVM.

7.34 IMSI detach +UCSDETACH

+UCSDETACH						
Modules	TOBY-L2 MPCI-L2					
Attributes	**Syntax**	**PIN required**	**Settings saved**	**Can be aborted**	**Response time**	**Error reference**
	full	No	No	No	-	+CME Error

7.34.1 Description

Dynamically performs an IMSI detach if the module is currently registered to the CS services.

☞ CS services can be also disabled by using +CEMODE and +CGCLASS while the module is not registered on the network.

7.34.2 Syntax

Type	Syntax	Response	Example
Action	AT+UCSDETACH	OK	AT+UCSDETACH OK
Test	AT+UCSDETACH=?	OK	

7.35 MNO configuration +UMNOCONF

+UMNOCONF						
Modules	TOBY-L201 TOBY-L280-02S MPCI-L201 MPCI-L280					
	LARA-R202 LARA-R203 LARA-R204 TOBY-R2					
Attributes	**Syntax**	**PIN required**	**Settings saved**	**Can be aborted**	**Response time**	**Error reference**
	partial	No	NVM	No	Up to 3 min	+CME Error

7.35.1 Description

Automatically configures the module to be compliant to the requirements of various Mobile Network Operators.

For specific operators like Verizon, MNO requirements are enforced by an internal connection manager application.

☞ TOBY-L2 / MPCI-L2
After setting a new configuration the module:

- deregisters from the network, actually entering the airplane mode;
- deletes the current PDP context configuration;
- reconfigures the PDP context settings (e.g. APN of the initial EPS bearer);
- configures the IMS service;
- if necessary, reconfigures the appropriate UE radio capabilities (e.g. HSDPA class, frequency bands).

A reboot is mandatory only if the <MNO> parameter has changed; the <conf> bitmap is applied runtime. Automatic reboot after a change in the MNO derived from the SIM card can be optionally enabled.

☞ LARA-R202 / LARA-R203 / TOBY-R2
Follow this procedure to properly set up the configuration to T-Mobile MNO:

- Deregister the module from the network (AT+COPS=2 or perform a AT+CFUN=4 / AT+CFUN=1 cycle)
- Issue AT+UMNOCONF=5
- Issue AT+CGDCONT=1,"IPV4V6","fast.t-mobile.com"
- Reboot the module (AT+CFUN=16) in order to apply the new configuration

☞ LARA-R204
After setting a new configuration the module reconfigures the PDP context settings (e.g. APN of the initial EPS bearer) and re-enables the IMS service. Reboot the module to apply the new configuration.

☞ TOBY-L201 / MPCI-L201
On TOBY-L201-01S, TOBY-L201-02S-00, MPCI-L201-01S, MPCI-L201-02S-00 the BIP support is included in Terminal Profile and the BIP client is started only in Verizon and regulatory configurations.

☞ TOBY-L201 / MPCI-L201
When changing configuration from Verizon, check the current +URAT setting, that might have been silently changed by the OMA-DM client.

☞ LARA-R204
On LARA-R204-02B-00 upon roaming attach the UE follows Verizon Wireless requirement to have IMS OFF and EPS attach with Class 3 APN, IPv4-only IP type. The following settings are required to send MO SMS when roaming:

- AT+UICMGSMODE=1 to set the 3GPP mode for MO SMS
- AT+UISMS=0 to set the CS domain for MO SMS

When back to Verizon HPLMN the legacy Verizon attach configuration is automatically set but SMS settings must be restored (if changed) with commands below:

- AT+UICMGSMODE=2 to set the 3GPP2 mode for MO SMS
- AT+UISMS=1 to set the PS domain for MO SMS

When the <MNO> parameter is set to automatic, the module derives the current MNO from the IMSI (<detected_MNO>) and, after the mandatory reboot triggered by the user, it:

- applies the configuration implied by the current <detected_MNO> value,
- starts the MNO detection algorithm, and
- issues a URC any time the <detected_MNO> value changes.

After the URC has been issued, depending on <conf> parameter (bit 0), the module reboot can be either automatic or manual:

- If the <detected_MNO> value is valid, and the automatic power cycle is enabled (bit 0 of <conf> parameter set to 1) then the module will autonomously reboot as if AT+CFUN=16 were entered. In this case the URC simply warns the user that the module is about to power cycle.
- If automatic power cycle is disabled, the URC warns the user that a module reboot is required in order to have the correct configuration applied.

☞ TOBY-L2 / MPCI-L2 / LARA-R2 / TOBY-R2
If the <detected_MNO> value does not map to any of the pre-defined MNOs AT&T or Verizon, or Telstra, the configuration applied after the reboot is the regulatory one.

☞ u-blox cellular modules are certified according to all the capabilities and options stated in the Protocol Implementation Conformance Statement document (PICS) of the module. The PICS, according to 3GPP TS 51.010-2 [84], 3GPP TS 34.121-2 [85], 3GPP TS 36.521-2 [115] and 3GPP TS 36.523-2 [116], is a statement of the implemented and supported capabilities and options of a device. If the user changes the command settings during the certification process, the PICS of the application device integrating a u-blox cellular module must be changed accordingly.

7.35.2 Syntax

Type	Syntax	Response	Example
Set	AT+UMNOCONF=<MNO>[,<conf>]	OK	AT+UMNOCONF=1 OK
Read	AT+UMNOCONF?	+UMNOCONF: <MNO>,<conf>[,<detected_MNO>] OK	+UMNOCONF: 3,23 OK
Test	AT+UMNOCONF=?	+UMNOCONF: (list of supported <mode>s),(list of supported <conf>s) OK	+UMNOCONF: (0-3),(0-31) OK
URC		+UMNOCONF: <MNO>,<conf>,<detected_MNO>	+UMNOCONF: 1,7,0

7.35.3 Defined values

Parameter	Type	Description
<MNO>	Number	Mobile Network Operator (MNO) configuration:

Parameter	Type	Description
		• 0: regulatory. IMS service disabled, Verizon connection manager disabled, all 4G and 3G bands enabled, <conf> is ignored • 1: automatic detection of MNO configuration based on IMSI • 2: AT&T configuration. IMS service disabled, all supported 4G bands enabled, HSDPA Category set to 14 • 3: Verizon. IMS enabled (SMS only), Verizon connection manager enabled , 4G bands 4 and 13. The Verizon connection manager will always ensure that the proper PDP contexts are defined and active. • 4: Telstra. IMS service disabled, all supported 4G bands enabled. • 5: T-Mobile. IMS service enabled, all supported 4G bands enabled. The LTE initial default bearer (<cid>=1) is opportunely configured Allowed values: • TOBY-L201 / MPCI-L201 - 0 (regulatory), 1 (automatic detection), 2 (AT&T), 3 (Verizon). The default and factory-programmed value is 2. • TOBY-L280-02S / MPCI-L280-02S - 0 (regulatory), 1 (automatic detection), 4 (Telstra). The default and factory-programmed value is 4. • LARA-R204 - 0 (regulatory), 3 (Verizon). The default and factory-programmed value is 3. • LARA-R202 / LARA-R203 / TOBY-R2 - 0 (regulatory), 2 (AT&T), 5 (T-Mobile). The default and factory-programmed value is 2.
<conf>	Number	Unsigned integer representing a bitmask. ☞ TOBY-L2 / MPCI-L2 / LARA-R2 / TOBY-R2 See Table 13 for for the meaning of each bit.
<detected_MNO>	Number	Current MNO detected in automatic mode. Allowed values: • 0: test SIM/USIM (regulatory) • 1: detection error: the module keeps the current configuration (factory configuration is regulatory) and automatic mode is disabled until the module is rebooted. • 2: AT&T SIM/USIM • 3: Verizon SIM/USIM • 4: Telstra SIM/USIM • 5: T-Mobile SIM/USIM Allowed values: • TOBY-L201 / MPCI-L201 - 0 (regulatory), 1 (automatic detection), 2 (AT&T), 3 (Verizon). • TOBY-L280-02S / MPCI-L280-02S - 0 (regulatory), 1 (automatic detection), 4 (Telstra). • LARA-R204 - 0 (regulatory), 1 (automatic detection), 3 (Verizon). • LARA-R202 / LARA-R203 / TOBY-R2 - 0 (regulatory), 2 (AT&T), 5 (T-Mobile).

7.35.4 Notes

TOBY-L2 / MPCI-L2 / LARA-R2 / TOBY-R2

- A module reboot is needed to enable to IMS test mode when the Verizon connection manager is disabled (<conf>=11).
-

Bit	Bit description	Value	Remarks
0	Power cycle configuration, effective only if <MNO> = 1 A module reboot is not required to apply it.	0	Disabled
		1	Automatic power cycle enabled (default and factory-programmed value)
1	Reserved.		
2	Verizon connection manager configuration. A module reboot is not required to apply it. The Verizon connection manager is required for the module operation. It can be disabled for debug purposes or if the DTE has its own external manager. A change in this bit, allowed only if <MNO> = 3 or <MNO> = 1 and <detected_MNO> = 3, automatically triggers the restart of the protocol stack.	0	Stop Verizon connection manager
		1	Start Verizon connection manager.

Bit	Bit description	Value	Remarks
	☞ The Verizon connection manager configuration must always be active if <MNO> = 0 or <MNO> = 3; otherwise the module cannot register with the network. ☞ TOBY-L201 / MPCI-L201 The default and factory-programmed value is 1.		
3	IMS test mode configuration. A module reboot is required to apply it.	0	Disabled (default and factory-programmed value)
		1	Start IMS test mode
4	VZWINTERNET handling in Verizon connection manager. The manager will set the PDP context with <CID>= 8 to VZWINTERNET and it will automatically activate it. Allowed only if <MNO> = 3 or <MNO> = 1 and <detected_MNO> = 3. A change in this bit automatically triggers the restart of the protocol stack.	0	Not handled (default and factory-programmed value).
		1	Handled by Verizon connection manager.
5	UMTS handling configuration The internal connection manager could try to activate the Verizon context also in 3G RAT leading to a potential issue with roaming. Allowed only if <MNO> = 3 or <MNO> = 1 and <detected_MNO> = 3.	0	Feature disabled (factory-programmed and default value): the UMTS is not handled. The Verizon configuration will be handled in LTE only.
		1	Feature enabled: try to activate current Verizon configuration also on UMTS.
6	PLMN check The PLMN check is performed before the LTE registration and the +UCGDFLT APN is configured based on the internal information: o If PLMN is Verizon (based on +UMNOPLMN list) then the Verizon APN will be used based on the current bitmap o If PLMN is not recognized then the roaming list is checked and APN is accordingly set o Otherwise the Verizon APN will be used as default, and the user can manually override it with +UCGDFLT	0	Feature enabled (factory-programmed and default value)
		1	Feature disabled. The PLMN check is not performed and it is assumed that each PLMN is Verizon.
7	IPv6 tethering configuration in router mode Enabling the feature; the module will start IPv6 NDP (Neighbor Discovery Protocol) negotiations over the USB link for the IPv6 subnetwork assigned to VZWINTERNET by the network	0	IPv6 tethering enabled
		1	IPv6 tethering disabled
1	The custom algorithm is used		

Table 13: <conf> bitmask meaning

TOBY-L201 / MPCI-L201

- The default and factory-programmed value of <conf> is 7.
- A module reboot is not needed if the value of <conf> parameter is set to 7, 15, 23, 39, 47 or 55 and it is configured with another one of these values.
- In Verizon configuration, it is necessary to set the correct date and time to be fully operational on the network (OMA-DM transactions originated by the network might fail otherwise). This can be done by means of +CCLK command or by enabling the automatic date and time zone update with +CTZU command.
- In Verizon configuration (<MNO>=3) the following configuration are not stored in NVM:
  - Automatic power cycle (bit 0 of <conf> parameter)
  - Verizon connection manager enabled (bit 2 of <conf> parameter)

TOBY-L280-02S / MPCI-L280-02S

- The default and factory-programmed value of <conf> is 1.

- The module boots in airplane mode (+CFUN: 4) after having set the module in regulatory configuration (<MNO>=0) and performed a silent reset (AT+CFUN=16).
- If <MNO>=4 the radio access technology cannot be configured to LTE single mode (the <SelectedAcT> parameter of +URAT AT command cannot be set to 3).

LARA-R204

- If <MNO>= 3 only <conf> = 7 and 15 are supported.
- The default and factory-programmed value of <conf> is 7.
- If <MNO>=3 it is not possible to activate a secondary context. A secondary context can be activated only in regulatory configuration (<MNO>= 0).
- In Verizon configuration, it is necessary to set the correct date and time to be fully operational on the network (OMA-DM transactions originated by the network might fail otherwise). This can be done by means of +CCLK command or by enabling the automatic date and time zone update with +CTZU command.

LARA-R202

- The value of the <conf> parameter is ignored; it always reports 7.
- <MNO>=5 automatically sets the APN of <cid>=1 to "fast.t-mobile.com".

LARA-R203

- The value of the <conf> parameter is ignored; it always reports 7.

TOBY-R2

- The command is not supported by TOBY-R200-02B-00 and TOBY-R202-02B-00.
- The default and factory-programmed value of <conf> is 7.

7.36 PLMN list extensions +UMNOPLMN

+UMNOPLMN						
Modules	TOBY-L201 TOBY-L280 MPCI-L201 MPCI-L280					
Attributes	**Syntax**	**PIN required**	**Settings saved**	**Can be aborted**	**Response time**	**Error reference**
	full	No	NVM	No	-	+CME Error

7.36.1 Description

Edit the PLMN list used by AT+UMNOCONF's MNO detection algorithm during the IMSI identification phase in automatic MNO mode. It configures the mapping of the current detected MNO to one of the pre-defined MNO values. It is possible to extend the PLMN list of these MNO:

- AT&T
- Verizon
- Telstra

The following actions are allowed:

- Add a PLMN (or more) to the automatic MNO detection algorithm: this is possible only if it does not collide with the current setting (no ambiguity shall arise); if some collisions happen, restore the command setting to the factory-programmed configuration
- Revert the mapping of one of the pre-defined MNO to its factory-programmed value with AT+UMNOPLMN=<detectable_MNO>

The maximum number of the entries in the PLMN table is 40. The information text response of the read command provide one line for each allowed <detectable_MNO>.

For each set command at most 10 ranges can be defined. It is possible to issue some set commands until the PLMN list is filled.

7.36.2 Syntax

Type	Syntax	Response	Example
Set	AT+UMNOPLMN=<detectable_MNO>[,<plmn_list>]	OK	AT+UMNOPLMN=2,"310.050" OK

Type	Syntax	Response	Example
Read	AT+UMNOPLMN?	+UMNOPLMN: <detectable_MNO>, <plmn_list> [....] OK	+UMNOPLMN: 2,"310.030,310.150, 310.170,310.280,310.380,310.410,310 .560" +UMNOPLMN: 3,"310.590,310.890, 311.480" OK
Test	AT+UMNOPLMN=?	+UMNOPLMN: (list of supported <detectable_MNO>s), OK	+UMNOPLMN: (2,3), OK

7.36.3 Defined values

Parameter	Type	Description
<detectable_MNO>	Number	Detected MNO to be configured (see AT+UMNOCONF). Allowed values: • 2: AT&T • 3: Verizon • 4: Telstra
<plmn_list>	String	PLMNs list. Same syntax of AT+USIMLCK's <pers_data> when <facility> = "PN" (network personalization). The parameter is optional. If omitted then the factory PLMN list for the requested <detectable_MNO> will be restored. The parameter format is: "MCC1.MNC1min[-MNC2max][,MCC2.MNC2min[-MNC2max]...[,MCC10.MNC10min[-MNC10max]]".

7.36.4 Notes

TOBY-L201 / MPCI-L201

- <detectable_MNO> = 4 not supported.
- If the detected MNO is Verizon, the PLMN list set with this command is also added to the internal connection manager home list. The internal connection manager, after having recognized it as home, will activate it.
- The factory-programmed value of <plmn_list> parameter for AT&T is "310.030,310.150,310.170,310.280, 310.380,310.410,310.560".
- The factory-programmed value of <plmn_list> parameter for Verizon is "310.590,310.890,311.480".

TOBY-L280 / MPCI-L280

- <detectable_MNO> = 2 and 3 not supported.
- The factory-programmed value of <plmn_list> parameter for Telstra is "505.11,505.71,505.72,505.01, 530.04".

7.37 LTE category configuration +ULTECAT

+ULTECAT						
Modules	TOBY-L200-02S TOBY-L200-03A TOBY-L200-03S TOBY-L201 TOBY-L210-02S TOBY-L210-03A TOBY-L210-03S TOBY-L210-62S TOBY-L220 TOBY-L280 MPCI-L200-02S MPCI-L200-03S MPCI-L201 MPCI-L210-02S MPCI-L210-03S MPCI-L220 MPCI-L280					
Attributes	**Syntax**	**PIN required**	**Settings saved**	**Can be aborted**	**Response time**	**Error reference**
	full	No	NVM	No	-	+CME Error

7.37.1 Description

Sets the module LTE category.

For a description of LTE categories see http://www.3gpp.org/keywords-acronyms/1612-ue-category or 3GPP TS 36.306 [104].

The command is accepted only in normal operation mode, namely +CFUN=1. Reboot the module to apply the new configuration.

7.37.2 Syntax

Type	Syntax	Response	Example
Set	AT+ULTECAT=<mode>[,<lte_category>]	OK	AT+ULTECAT=0,2 OK
Read	AT+ULTECAT?	+ULTECAT: <mode>,<lte_category> OK	+ULTECAT: 0,2 OK
Test	AT+ULTECAT=?	+ULTECAT: (list of supported <mode>s),(list of supported <lte_category>s) OK	+ULTECAT: (0,1),(1-4) OK

7.37.3 Defined values

Parameter	Type	Description
<mode>	Number	Configures how to apply the LTE category. Allowed values: • 0 (factory-programmed value): use the factory-programmed LTE category configuration. <lte_category> is meaningless with this configuration • 1: apply user category. The custom LTE category will be applied
<lte_category>	Number	LTE category. Allowed values: • 1: LTE category 1 • 2: LTE category 2 • 3: LTE category 3 • 4 (default and factory-programmed values): LTE category 4

7.38 Edit Verizon wireless APN table +VZWAPNE

+VZWAPNE						
Modules	TOBY-L201 MPCI-L201					
	LARA-R204					
Attributes	**Syntax**	**PIN required**	**Settings saved**	**Can be aborted**	**Response time**	**Error reference**
	partial	No	NVM	No	-	+CME Error

7.38.1 Description

Reads and writes the APN table stored in the NVM:

- The set command causes the APN table on the DUT to be overwritten. Only Class 3, 6 and 7 APNs can be overwritten to any customer defined string.
- The read command queries the APN table that is currently on the DUT, starting from the first entry to the last; it returns each APN entry in a new line.

7.38.2 Syntax

Type	Syntax	Response	Example
Set	AT+VZWAPNE=<wapn>,<apncl>,<apnni>,<apntype>,<apnb>,<apned>,<apntime>	OK	AT+VZWAPNE=1,1,"IMS","IPv6","LTE","Enabled",0 OK
Read	AT+VZWAPNE?	[+VZWAPNE: <apncl>,<apnni>,<apntype>,<apnb>,<apned>,<apntime> [..]] OK	+VZWAPNE: 1,"IMS","IPv4v6","LTE","Enabled",0 +VZWAPNE: 2,"VZWADMIN","IPv4v6","LTE","Enabled",0 OK
Test	AT+VZWAPNE=?	+VZWAPNE: (list of supported <wapn>s),(list of supported <apncl>s),,(range of supported <apntype>s),range of supported <apnb>s),(list of supported <apned>s),(list of supported <apntime>s)	+VZWAPNE: (0-4),(1-4),,("IPv6","IPv4v6"),("LTE"),("Enabled","Disabled"),(0-1023) OK

Type	Syntax	Response	Example
		OK	

7.38.3 Defined values

Parameter	Type	Description
<wapn>	Number	APN list entry
<apncl>	Number	APN class
<apnni>	String	Network identifier: • "IMS" or "VZWIMS": Verizon IMS PDN, factory-programmed value for <apncl>=1 entry • "VZWADMIN": Verizon Administrative PDN, factory-programmed for <apncl>=2 entry • "VZWINTERNET": Verizon Internet PDN, factory-programmed for <apncl>=3 entry • "VZWAPP": Verizon Application PDN, factory-programmed for <apncl>=4 entry • "ENTERPRISE": Verizon Enterprise PDN, factory-programmed for <apncl>=6 entry • "THINGSPACE": Verizon Thingspace PDN, factory-programmed for <apncl>=7 entry
<apntype>	String	• "IPv6": IPv6 type • "IPv4v6" (factory-programmed value): IPv4 and IPv6 type
<apnb>	String	APN bearer: • "LTE" (factory-programmed value): LTE bearer used
<apned>	String	Enable/disable the APN: • "Enabled" (factory-programmed value): APN enabled • "Disabled": APN disabled
<apntime>	Number	APN inactivity timer value in minutes. The range goes from 0 to 5. Value '0' (factory-programmed value) sets the timer to infinity.

7.38.4 Notes

TOBY-L2 / MPCI-L2 / LARA-R2

- <apncl>=7 is not supported.

TOBY-L201-01S / MPCI-L201-01S

- Class 3 APN can be overwritten to any customer defined string. For other APN classes, only strings in the list of supported <apnni>s are allowed.

TOBY-L201-01S / MPCI-L201-01

- The class 1 APN NI is "VZWIMS".
- <apncl>=6 is not supported.

LARA-R204

- The VZWAPNE settings are also managed (can be read and written) over the air via OMA-DM.

TOBY-L201-02S / MPCI-L201-02S / LARA-R204

- On LARA-R204-02B-00, LARA-R204-02B-01, TOBY-L201-02S-00, MPCI-L201-02S-00 <apncl>=6 is not supported.
- On LARA-R204-02B-00, LARA-R204-02B-01, TOBY-L201-02S-00, MPCI-L201-02S-00 the class 1 APN NI is "VZWIMS".

7.39 Read RSRP values +VZWRSRP

+VZWRSRP						
Modules	TOBY-L201 MPCI-L201					
	LARA-R204					
Attributes	Syntax	PIN required	Settings saved	Can be aborted	Response time	Error reference
	full	No	No	No	-	+CME Error

7.39.1 Description

Returns the RSRP (Reference Signal Received Power) values for all LTE cells which the module is measuring.

7.39.2 Syntax

Type	Syntax	Response	Example
Read	AT+VZWRSRP?	+VZWRSRP: [<cellID1>,<EARFCN1>,<RSRP1>[,<cellID2>,<EARFCN2>,<RSRP2>[,...]]] OK	+VZWRSRP: 000,2175,"-61.00" OK

7.39.3 Defined values

Parameter	Type	Description
<cellIDn>	Number	nth cell physical cell identifier in "xxx" format. The range goes from 0 to 503.
<EARFCNn>	Number	nth cell EARFCN in decimal format. The range goes from 0 to 65535.
<RSRPn>	String	nth cell RSRP value in dBm/15 kHz where the format is "-XX.XX".

7.40 Read RSRQ values +VZWRSRQ

+VZWRSRQ						
Modules	TOBY-L201 MPCI-L201					
	LARA-R204					
Attributes	Syntax	PIN required	Settings saved	Can be aborted	Response time	Error reference
	full	No	No	No	-	+CME Error

7.40.1 Description

Returns the RSRQ (Reference Signal Received Quality) values for all the LTE cells which the module is measuring.

7.40.2 Syntax

Type	Syntax	Response	Example
Read	AT+VZWRSRQ?	+VZWRSRQ: [<cellID1>,<EARFCN1>,<RSRQ1>[,<cellID2>,<EARFCN2>,<RSRQ2>[,...]]] OK	+VZWRSRQ: 000,2175,"-11.00" OK

7.40.3 Defined values

Parameter	Type	Description
<cellID>	Number	nth cell physical cell identifier in "xxx" format. The range goes from 0 to 503.
<EARFCN>	Number	nth cell EARFCN in decimal format. The range goes from 0 to 65535.
<RSRP>	String	nth cell RSRP value in dBm/15 kHz where the format is "-XX.XX".

7.41 Closed Subscriber Group +UCSG

+UCSG						
Modules	TOBY-L4					
	LARA-R202 LARA-R211 LARA-R280 TOBY-R2					
Attributes	Syntax	PIN required	Settings saved	Can be aborted	Response time	Error reference
	full	No	No	Yes	Up to 3 min	+CME Error

7.41.1 Description

Performs a manual or automatic selection of a CSG cell, fingerprint clean up (i.e. clean up of the information pertaining to a CSG entity stored by the module) and queries for the currently selected CSG cell information.

- The set command registers to CSG (in manual or automatic mode) or performs fingerprint clean up.

- The test command returns available CSG networks (if any) and the list of modes supported by set command.

☞ Only manual CSG selection set command and test command are abortable.

7.41.2 Syntax

Type	Syntax	Response	Example
Set	AT+UCSG=<mode>[,<oper>[,<csg_id>]]	OK	AT+UCSG=0 OK
Read	AT+UCSG?	+UCSG: <csg_sel_cause>[,<csg_id>,<csg_type_record_no>,<hnb_record_no>,<hnb_name>,<oper>,<AcT>,<csg_id_list_type>] OK	+UCSG: 0 OK
Test	AT+UCSG=?	+UCSG: [list of supported (<csg_id>,<csg_type_record_no>,<hnb_record_no>,<hnb_name>,<oper>,<AcT>,<csg_id_list_type>)s],,(list of supported <mode>s) OK	+UCSG: (2,0,0,"","00101",0,0),,(0-2) OK

7.41.3 Defined values

Parameter	Type	Description
<mode>	Number	Operation mode: • 0: automatic CSG selection mode. <oper> and <csg_id> are ignored, if present. • 1: manual CSG selection mode. <oper> and <csg_id> are mandatory parameters. • 2: clean up the information pertaining to a CSG entity stored by the module (i.e. Fingerprint Clean Up). <oper> and <csg_id> are mandatory or optional parameters depending on the following operations: o If both the parameters <oper> and <csg_id> are specified, then the specified PLMN and CSG ID combination shall be deleted. o If only <oper> is specified and <csg_id> is omitted, then all CSGs belonging to the specified PLMN shall be deleted. o If both <oper> and <csg_id> are omitted, then complete data (all CSGs and all PLMNs) shall be deleted. o If <oper> is omitted and <csg_id> is specified, then this is an error case.
<oper>	String	This parameter can be a string with 5 or 6 character long numeric format: • If <oper> is 5 character long numeric format, then first 3 digits are considered as MCC and next 2 digits are considered as MNC. • If <oper> is 6 character long numeric format, then first 3 digits are considered as MCC and next 3 digits are considered as MNC.
<csg_id>	Number	CSG identifier of the cell.
<csg_sel_cause>	Number	CSG selection cause: • 0: no selection cause, moved out of all CSG cell and CSG information should be ignored • 1: selected by manual selection process • 2: selected by automatic selection process
<csg_type_record_no>	Number	Record number of numeric type based on EF_{CGST} (3GPP TS 31.102 section 4.4.6.3 [19]) where CSG type is stored. The value indicates if the CSG type information is available at this record number in EF_{CGST}. If <csg_type_record_no>=0 then the CSG type information is not available.
<hnb_record_no>	Number	HNB record number at location EF_{HNBN} (3GPP TS 31.102 section 4.4.6.4 [19]). Different values can be: • 0: means the parameter <hnb_name> given is valid • >0: means the parameter <hnb_name> given is not valid and valid <hnb_name> is present at this record number in EF_{HNBN}
<hnb_name>	String	Name of Home Node B
<AcT>	Number	Indicates the radio access technology: • 0: GSM

Parameter	Type	Description
		• 1: UMTS • 2: LTE
<csg_id_list_type>	Number	Type of list of <csg_id> (see the 3GPP 25.367 [140]): • 0: <csg_id> is not in white list • 1: <csg_id> is in the operator list • 2: <csg_id> is in the allowed list

7.42 Network Friendly Mode (NFM) activation +UNFM

+UNFM						
Modules	SARA-U201 SARA-U260-03S SARA-U270-03A SARA-U270-03S SARA-U270-04B SARA-U270-53S SARA-U270-73S SARA-U280-03S LISA-U200-03S LISA-U200-83S LISA-U201					
	SARA-G340-02S SARA-G340-02X SARA-G350-02A SARA-G350-02S SARA-G350-02X SARA-G350-53S					
Attributes	**Syntax**	**PIN required**	**Settings saved**	**Can be aborted**	**Response time**	**Error reference**
	full	Yes	NVM	No	-	+CME Error

7.42.1 Description

Activates or deactivates the Network Friendly Mode (NFM) feature.

Generally an UE aggressively retries the registration procedure until it is successful and behaves similarly if the PDP context activation procedure fails. This behaviour may cause signalling overload and consequently prolonged network outage. To avoid these scenarios and provide a more efficient access to the network, the NFM feature controls the number of network accesses per service type over a configurable amount of time. In case of appropriate network rejection error causes, also a back-off timer can be started: when the timer is running or the number of allowed accesses is reached, further attempts are denied and the +UUNFM URC, if enabled, indicates the time remaining before a further attempt can be served. The back-off timer controls the temporal spread of successive attempts to register to CS or PS services, to activate a PDP context and to send SMS messages.

Some network rejection error causes require specific behaviours which NFM does not alter (see the 3GPP TS 24.008 [12]). Furthermore NFM blocks and counts only application requests.

When a set command is issued, all related timers and counters are reset and block conditions are cleared.

See the +UNFMCONF for the parameter configuration.

☞ If a SIM card belonging to AT&T is used, the factory-programmed value <mode>=0 shall be used to avoid conflicts with the Radio Policy Manager (RPM).

☞ +URPM and +UNFM AT commands cannot be both active at the same time.

7.42.2 Syntax

Type	Syntax	Response	Example
Set	AT+UNFM=<mode>[,<enableURC>]	OK	AT+UNFM=1 OK
Read	AT+UNFM?	+UNFM: <mode>,<enableURC>,<residual_time_1>,<residual_time_2>,<residual_time_3>,<residual_time_4> OK	+UNFM: 0,0,0,0,0,0 OK
Test	AT+UNFM=?	+UNFM: (list of supported <mode>s),(list of supported <enableURC>s) OK	+UNFM: (0,1),(0,1) OK
URC		+UUNFM: <type>[,<residual_time_n>]	+UUNFM: 2,1600

7.42.3 Defined values

Parameter	Type	Description
<mode>	Number	Indicates the action to perform: • 0: (factory-programmed value): NFM deactivated • 1: NFM activated
<enableURC>	Number	Configures the +UUNFM URC presentation: • 0: (default and factory-programmed value): +UUNFM URC disabled • 1: +UUNFM URC enabled
<residual_time_n>	Number	Time in seconds until the active block <type> (n=<type>) is cleared.
<type>	Number	Information type. It indicates the block type that denied the application's request (see the +UNFMCONF): • 0: CS back-off timer running • 1: PS back-off timer running • 2: PDP back-off timer running • 3: SMS back-off timer running • 4: <CS_REG> attempts reached • 5: <PS_REG> attempts reached • 6: <PDP_OK> attempts reached

7.43 Network Friendly Mode (NFM) configuration +UNFMCONF

+UNFMCONF						
Modules	SARA-U201 SARA-U260-03S SARA-U270-03A SARA-U270-03S SARA-U270-04B SARA-U270-53S SARA-U270-73S SARA-U280-03S LISA-U200-03S LISA-U200-83S LISA-U201					
	SARA-G340-02S SARA-G340-02X SARA-G350-02A SARA-G350-02S SARA-G350-02X SARA-G350-53S					
Attributes	**Syntax**	**PIN required**	**Settings saved**	**Can be aborted**	**Response time**	**Error reference**
	full	No	NVM	No	-	+CME Error

7.43.1 Description

Configures the Network Friendly Mode (NFM) related parameters.

The parameters are grouped in different sets:

- Back-off timer parameters: the timer follows a geometric sequence whose scale factor, common duration and upper limit are configurable. The timer duration is reset to the scale factor at every successful registration or PDP context activation
- Basic parameters: they define the maximum numbers of CS and PS registration and PDP context activation attempts in a given time interval

Back-off timer parameters are set to a predefined value; all the other parameters are by default disabled.

User defined parameter configurations are stored in NVM: to make them effective, either a power cycle or +UNFM=1 command is required.

☞ The <op_code> parameter is not saved in NVM; the information text response to the read command provides the setting for all the <op_code> parameter values.

7.43.2 Syntax

Type	Syntax	Response	Example
Generic syntax			
Set	AT+UNFMCONF=<op_code>,.....	OK	
Back-off timer configuration			
Set	AT+UNFMCONF=0,<scale_factor>,<common_ratio>,<upper_limit>	OK	
Basic parameter configuration			

Type	Syntax	Response	Example
Set	AT+UNFMCONF=1,<CS_REG>,<time_interval>,<PS_REG>,<time_interval>,<PDP_OK>,<time_interval>	OK	AT+UNFMCONF=1,60,2,1920 OK
Read	AT+UNFMCONF?	+UNFMCONF: 0,<scale_factor>,<common_ratio>,<upper_limit> +UNFMCONF: 1,<CS_REG>,<time_interval>,<PS_REG>,<time_interval>,<PDP_OK>,<time_interval> OK	+UNFMCONF: 0,60,2,7680 +UNFMCONF: 1,10,1,10,1,10,1 OK
Test	AT+UNFMCONF=?	+UNFMCONF: (list of the supported <op_code>s) OK	+UNFMCONF: (0-1) OK

7.43.3 Defined values

Parameter	Type	Description
<op_code>	Number	Type of operation: • 0: back-off timer configuration parameter set • 1: basic parameter set
<scale_factor>	Number	Back-off timer base in seconds, range 1 - 255 (the factory-programmed value is 60)
<common_ratio>	Number	Multiplier factor of the geometrical sequence, range 1 - 255 (the factory-programmed value is 2)
<upper_limit>	Number	Back-off timer's maximum duration in seconds, range 0 - 86400 (0: back-off timer disabled, the factory programmed value is 7680)
<CS_REG>	Number	Maximum number of CS registration attempts per defined <time_interval>, range 0 - 255 (0: unlimited attempts). The factory-programmed value is 10.
<time_interval>	Number	Time interval in hours associated to the preceding parameter, range 0 - 24 (0: unlimited attempts). The factory-programmed value is 1.
<PS_REG>	Number	Maximum number of PS registration attempts per defined <time_interval>, range 0 - 255 (0: unlimited attempts). The factory-programmed value is 10.
<PDP_OK>	Number	Maximum number of successful PDP context activation attempts per defined <time_interval>, range 0 - 255 (0: unlimited attempts). The factory-programmed value is 10.

7.43.4 Notes

Block type	Associated network rejection error causes
Back-off timer	IMSI unknown in HLR, illegal MS, IMEI not accepted, illegal ME, GPRS services not allowed, GPRS services and non-GPRS services not allowed, device identity cannot be derived by network, MSC temporarily unreachable, network failure, congestion, service option temporarily out of order, protocol error unspecified, insufficient resources, unknown or missing APN, unknown PDP address, authentication failed, activation rejected by GGSN, service option out of order, NSAPI already in use

Table 14: Network rejection error causes relation with block types

7.43.5 Notes

- The block types related to PDP activations and/or deactivations are based on the internal <cid> value, thus:
  - if a <cid> is re-used, the internal counters are reset.
  - +CGACT set command's syntax with omitted <cid> is not allowed.

7.44 Radio Policy Manager (RPM) activation +URPM

+URPM						
Modules	TOBY-L4 TOBY-L200-03A TOBY-L200-03S TOBY-L201-02S TOBY-L210-03A TOBY-L210-03S TOBY-L280-03A TOBY-L280-03S MPCI-L201-02S					
	SARA-U201 SARA-U260-03S SARA-U270-03A SARA-U270-03S SARA-U270-04B SARA-U270-53S SARA-U270-73S SARA-U280-03S LISA-U200-03S LISA-U200-83S LISA-U201					
	SARA-G340-02S SARA-G340-02X SARA-G350-02A SARA-G350-02S SARA-G350-02X SARA-G350-53S					
Attributes	**Syntax**	**PIN required**	**Settings saved**	**Can be aborted**	**Response time**	**Error reference**
	full	No	NVM	No	-	+CME Error

7.44.1 Description

Activates or deactivates the Radio Policy Manager (RPM) feature for SIM cards not belonging to AT&T network operator.

Generally an UE aggressively retries the registration procedure until it is successful and behaves similarly in case the PDP context activation procedure fails. This behaviour may cause signalling overload and consequently prolonged network outage. To avoid these scenarios and provide a more efficient access to the network, the RPM feature controls the number of network accesses per service type over a fixed amount of time. For more details on the RPM feature see AT&T Device Requirements [61] and GSMA Connection Efficiency [155].

Some network rejection error causes require specific behaviours which the RPM feature does not alter (see the 3GPP TS 24.008 [12]).

☞ If a SIM card belonging to AT&T is inserted, <mode>=1 shall not be set to avoid altering the behavior of the RPM feature that is autonomously enabled and configured by the module with AT&T SIM cards.

☞ +URPM and +UNFM AT commands cannot be both active at the same time.

7.44.2 Syntax

Type	Syntax	Response	Example
Set	AT+URPM=<mode>	OK	AT+URPM=1 OK
Read	AT+URPM?	+URPM: <mode> OK	+URPM: 1 OK
Test	AT+URPM=?	+URPM: (list of supported <mode>s) OK	+URPM: (0,1) OK

7.44.3 Defined values

Parameter	Type	Description
<mode>	Number	Indicates the action to perform: • 0: (factory-programmed value): RPM feature deactivated • 1: RPM feature activated

7.44.4 Notes

TOBY-L200-02S / TOBY-L201-02S / TOBY-L210-02S / TOBY-L280-02S / MPCI-L201-02S

- The command is not supported by TOBY-L200-03S-00, TOBY-L201-02S-00, TOBY-L210-03S-00, TOBY-L210-03A-00, TOBY-L280-03S-00, MPCI-L201-02S-00.

7.45 Radio Policy Manager (RPM) configuration +URPMCONF

+URPMCONF						
Modules	TOBY-L4 TOBY-L200-03A TOBY-L200-03S TOBY-L201-02S TOBY-L210-03A TOBY-L210-03S TOBY-L280-03A TOBY-L280-03S MPCI-L201-02S					
Attributes	**Syntax**	**PIN required**	**Settings saved**	**Can be aborted**	**Response time**	**Error reference**
	partial	No	NVM	No	-	+CME Error

7.45.1 Description

Configures the Radio Policy Manager (RPM) related parameters.

The parameters are grouped in different sets:

- PLMN SIM card based check configuration: it sets at most 5 PLMNs in MCC.MNC format, for which the RPM functionality will be active. SIM cards belonging to AT&T are already included as the module adheres to AT&T Device Requirements [61]) and will not be displayed in the read command
- Current RPM configuration: the parameters can only be read
- Default RPM parameter setting stored in the module: the parameters can only be read

7.45.2 Syntax

Type	Syntax	Response	Example
Generic syntax			
Set	AT+URPMCONF=<op_code>,.....	OK	
PLMN SIM card based check configuration			
Set	AT+URPMCONF=0,<PLMN>,<PLMN>,<PLMN>,<PLMN>,<PLMN>	OK	AT+URPMCONF=0,"222.88","FFF.FF","123.456","987.65","222.10" OK
Read	AT+URPMCONF?	+URPMCONF: 0,<PLMN>,<PLMN>,<PLMN>,<PLMN>,<PLMN> +URPMCONF: 1,<RPM_active>,<SIM_RPM_setting>,<N1>,<T1>,<F1>,<F2>,<F3>,<F4>,<LR1>,<LR2>,<LR3> +URPMCONF: 2,<RPM_enabled_flag_m>,<N1_m>,<T1_m>,<F1_m>,<F2_m>,<F3_m>,<F4_m> OK	+URPMCONF: 0,"222.88","","123.456","987.65","222.10" +URPMCONF: 1,0,0,0,0,0,0,0,0,0,0,0 +URPMCONF: 2,1,20,60,60,30,60,30 OK
Test	AT+URPMCONF=?	+URPMCONF: (list of the supported <op_code>s) OK	+URPMCONF: (0) OK

7.45.3 Defined values

Parameter	Type	Description
<op_code>	Number	Type of operation: • 0: PLMN SIM card based check configuration • 1: current RPM configuration
<PLMN>	String	PLMN in MCC.MNC format. "FFF.FF" indicates empty PLMN; the range goes from 000.00 to 999.999. The factory-programmed value is empty.
<RPM_active>	Number	Indicates the action to perform: • 0: RPM feature is currently not active • 1: RPM feature is currently active
<SIM_RPM_setting>	Number	Indicates whether the inserted SIM card contains RPM parameter setting: • 0: the inserted SIM card does not contain the RPM parameter setting • 1: the inserted SIM card contains the RPM parameter setting
<N1>,<T1>,<F1>,<F2>,<F3>,<F4>,<LR1>,<LR2>,<LR3>	Number	See the AT&T Device Requirements [61].

Parameter	Type	Description
<RPM_enabled_flag_m>,<N1_m>,<T1_m>,<F1_m>,<F2_m>,<F3_m>,<F4_m>	Number	Default RPM parameter setting stored in the module. See the AT&T Device Requirements [61].

7.45.4 Notes

TOBY-L200-02S / TOBY-L201-02S / TOBY-L210-02S / TOBY-L280-02S / MPCI-L201-02S

- The command is not supported by TOBY-L200-03S-00, TOBY-L201-02S-00, TOBY-L210-03S-00, TOBY-L210-03A-00, TOBY-L280-03S-00, MPCI-L201-02S-00.

7.46 Device Aggresion Management configuration +UDAMCFG

+UDAMCFG						
Modules	TOBY-L4006					
	LARA-R202 LARA-R203					
Attributes	**Syntax**	**PIN required**	**Settings saved**	**Can be aborted**	**Response time**	**Error reference**
	full	No	NVM	No	-	+CME Error

7.46.1 Description

Enables/disables the device aggression management (DAM).

7.46.2 Syntax

Type	Syntax	Response	Example
Set	AT+UDAMCFG=<status>	OK	AT+UDAMCFG=1 OK
Read	AT+UDAMCFG?	+UDAMCFG: <status>,6,5,5,60,30,60 OK	+UDAMCFG: 1,6,5,5,60,30,60 OK
Test	AT+UDAMCFG=?	+UDAMCFG: (list of supported <status>s) OK	+UDAMCFG: (0,1) OK

7.46.3 Defined values

Parameter	Type	Description
<status>	Number	DAM status. Allowed values: • 0: DAM disabled • 1 (factory-programmed value): DAM enabled

7.47 PLMN search configuration in Out Of Coverage +UDCONF=55

+UDCONF=55						
Modules	SARA-U201-04A SARA-U201-04B SARA-U201-04X SARA-U270-04B					
Attributes	**Syntax**	**PIN required**	**Settings saved**	**Can be aborted**	**Response time**	**Error reference**
	full	No	NVM	No	-	+CME Error

7.47.1 Description

Configures the PLMN search in Out Of Coverage (OOC) conditions for power saving purposes. The functionality is disabled if both timers are set to zero.

☞ Setting one timer to a positive value and the other to zero provides an error result code.

☞ If the configuration is changed when it is already active the new settings are applied at the next start of the PLMN search timer.

☞ The configuration does not apply to other types of PLMN search, e.g. in Limited Service or triggered by the AT+COPS test command.

7.47.2 Syntax

Type	Syntax	Response	Example
Set	AT+UDCONF=55,<timer1>,<timer2>	OK	AT+UDCONF=55,1,2 OK
Read	AT+UDCONF=55	+UDCONF: 55,<timer1>,<timer2> OK	AT+UDCONF=55 +UDCONF: 55,1,2 OK

7.47.3 Defined values

Parameter	Type	Description
<timer1>	Number	Time interval after entering OOC during which the PLMN scan follows the default platform scheme, in 10 s basis. The maximum value is 8640, indicating a time interval of 24 hours. The factory-programmed value is 0 (feature disabled).
<timer2>	Number	Time interval after entering OOC during which the PLMN scan is inhibited, in 10 s basis. During this time interval the Out Of Coverage condition cannot be cleared, unless the PLMN scan is triggered via AT+COPS test command. The maximum value is 8640, indicating a time interval of 24 hours. The factory-programmed value is 0 (feature disabled).

7.48 Purging of temporary mobile identities after SIM refresh +UDCONF=56

+UDCONF=56						
Modules	TOBY-L4006					
Attributes	Syntax	PIN required	Settings saved	Can be aborted	Response time	Error reference
	full	No	NVM	No	-	+CME Error

7.48.1 Description

Configures the cleaning of network provided temporary mobile identities used for NAS signaling after the occurrence of a SIM refresh of Type UICC Reset or NAA Session Reset.

☞ The command is persistent and requires a reboot to be stored to the NVM.

7.48.2 Syntax

Type	Syntax	Response	Example
Set	AT+UDCONF=56,<purge_identities_enabled>	OK	AT+UDCONF=56,0 OK
Read	AT+UDCONF=56	OK	+UDCONF: 56,<purge_identities_enabled> OK

7.48.3 Defined values

Parameter	Type	Description
<purge_identities_enabled>	Number	• 0: purging of temporary mobile identities not enabled • 1 (factory-programmed value): purging of temporary mobile identities enabled

7.49 Smart radio coverage manager configuration +UDCONF=57

+UDCONF=57						
Modules	TOBY-L4006 TOBY-L4106 TOBY-L4206 TOBY-L4906-01A					
	SARA-U201-04A SARA-U201-04B SARA-U201-04X SARA-U270-04B					
	SARA-G350-53S					
Attributes	**Syntax**	**PIN required**	**Settings saved**	**Can be aborted**	**Response time**	**Error reference**
	full	No	No	No	-	+CME Error

7.49.1 Description

Smart radio coverage manager is a feature that aims to reduce the power consumption in those cellular scenarios where the radio coverage or the NW conditions would cause an inefficient usage of power supply: the typical use case is when the module, in limited service or in out of coverage, performs frequent PLMN scans or unsuccessful registration attempts cycles. If the feature is enabled, when the device cannot get a reliable NW coverage or is not reachable for CS services for a user defined time interval, the cellular functionality is automatically switched off and, after a user defined delay, re-enabled to react to possible changes in radio coverage conditions.

The cellular functionality can be optionally switched off when the module often loses coverage for short periods, e.g. at cell borders in static conditions: a user defined threshold can be imposed on the maximum number of loss of coverage and cell selections events performed in sequence to prevent the module from bouncing between normal service an no service conditions. Also in this case the cellular functionality is re-enabled after the user defined period mentioned above.

The smart radio coverage manager can be activated by the application processor e.g. when it needs to enter its low power mode period, and shall be disabled when the power consumption constraints are relaxed (e.g. when passing from battery power supply to DC power supply). It is recommended to use it in static conditions, because in mobility the device can often enter no coverage or limited service conditions (e.g. when driving in a tunnel): in these cases the application processor should re-start the cellular functionality when it detects an unexpected change of +CFUN to airplane mode and must consider that the algorithm is still running, therefore if the radio and service coverage is unchanged, the airplane mode can be entered again, unless the feature is disabled (recommended setting).

It is also recommended to activate the feature while in full cellular functionality (i.e. +CFUN: 1) and either in normal service or at least 180 s after the previous action or AT command triggering CS registration (e.g. AT+COPS=0 or AT+CFUN=1 or switch on).

If the cellular functionality is switched off by the application processor via AT+CFUN=0 or AT+CFUN=4, the smart radio coverage manager will periodically enable it. This restriction does not apply to +COPS, i.e. if the module is detached via AT+COPS=2, the smart radio coverage manager algorithm does not start. Similarly, the feature should not be used with invalid SIM cards that cause the CS registration to be rejected with a permanent reject cause (e.g. illegal MS): in these cases, the device will enter limited service due to subscription restrictions and it must be reset in order to restart registration attempts; if the RPM feature is enabled, it will eventually trigger an automatic reset (see +URPM).

The user defined values (timers and thresholds) can be changed any time, but it is recommended to configure the value when the feature is disabled in order to be sure that the algorithm will run with the latest settings.

The feature is voice centric and shall not be enabled for data only applications, where CS services are disabled by the application processor (e.g. via AT+CGCLASS command) or by the NW.

7.49.2 Syntax

Type	Syntax	Response	Example
Generic syntax			
Set	AT+UDCONF=57,<func>[,<param1>[,<param2>]]	OK	AT+UDCONF=57,0,1 OK
Feature enabling			
Set	AT+UDCONF=57,0,<enable>	OK	AT+UDCONF=57,0,1 OK

Type	Syntax	Response	Example
Timer configuration			
Set	AT+UDCONF=57,1[,<timer1>[,<timer2>]]	OK	AT+UDCONF=57,0,60,600 OK
Temporary loss of coverage de-bouncing configuration			
Set	AT+UDCONF=57,2,<bounce_count>,<interval>	OK	AT+UDCONF=57,2,30,60 OK
Read	AT+UDCONF=57	+UDCONF: 57,0,<enable> +UDCONF: 57,1,<timer1>,<timer2> +UDCONF: 57,2,<bounce_count>,<interval> OK	+UDCONF: 57,0,1 +UDCONF: 57,1,60,600 +UDCONF: 57,2,20,60 OK

7.49.3 Defined values

Parameter	Type	Description
<func>	Number	• 0: enables or disable the algorithm • 1: configures the timers of the algorithm • 2: configures the de-bouncing algorithm
<enable>	Number	• 0: the algorithm is disabled (factory programmed value) • 1: the algorithm is enabled
<timer1>	Number	Timer expressed in seconds. The range goes from 30 to 86400 (24 hours). Factory programmed and default value is 30.
<timer2>	Number	Timer expressed in seconds. The range goes from 300 to 864000 (240 hours). Factory programmed and default value is 1800.
<bounce_count>	Number	Number of changes between normal service and no service condition before switching to airplane mode. Range goes from 10 to 100. Value 0 means that the debouncing feature is disabled. Factory programmed and default value is 0.
<interval>	Number	Maximum time interval (in seconds) during which the change between normal service and limited service/no coverage condition is considered an unexpected event and is used to increment the guard counter. When the guard counter reaches the <bounce_count>, the cellular functionality is switched off for <timer1> + <timer2> seconds. Range is 10 to 1800, factory programmed and default value is 20, suggested value for <interval> is slightly smaller than <timer1> value.

8 IP Multimedia Subsystem (IMS)

8.1 Introduction

TOBY-L201 / MPCI-L201
The module has been certified for Verizon network operator with the required IMS configuration, automatically set by AT+UMNOCONF command.
The IMS configuration can be modified through the +UIMSCONF AT command described in this section; in this case certification of the application device integrating the module could be not more valid.

8.2 Domain configuration for supplementary services +UISS

+UISS						
Modules	LARA-R211					
Attributes	**Syntax**	**PIN required**	**Settings saved**	**Can be aborted**	**Response time**	**Error reference**
	full	No	NVM	No	-	+CME Error

8.2.1 Description

Configures for performing query and set of supplementary services either in PS domain over IMS/XCAP (see Supplementary services introduction) or in CS domain through CSFB to legacy RAT if supported.

The setting is stored to NVM and any change is effective immediately after the set command has completed.

8.2.2 Syntax

Type	Syntax	Response	Example
Set	AT+UISS=<ss_mode>	OK	AT+UISS=1 OK
Read	AT+UISS?	+UISS: <ss_mode> OK	+UISS: 1 OK
Test	AT+UISS=?	+UISS: (list of supported <ss_mode>s) OK	+UISS: (0-2) OK

8.2.3 Defined values

Parameter	Type	Description
<ss_mode>	Number	Allowed values: • 0: SS transactions are sent only over XCAP • 1 (factory-programmed value): SS transactions are sent via CSFB • 2: SS transactions will go over XCAP if IMS is registered, over CSFB otherwise

8.2.4 Notes

LARA-R211

- The command is not supported by LARA-R211-02B-00.

8.3 IMS client configuration +UIMSCFG

+UIMSCFG						
Modules	LARA-R202 LARA-R203 LARA-R204 LARA-R211 TOBY-R2					
Attributes	**Syntax**	**PIN required**	**Settings saved**	**Can be aborted**	**Response time**	**Error reference**
	full	No	NVM	No	-	+CME Error

8.3.1 Description

Configures the IMS managed objects by means of proper keys that configure the corresponding functionality.

8.3.2 Syntax

Type	Syntax	Response	Example
Generic syntax			
Set / Read	AT+UIMSCFG=<op_code>[,<num_of_Config_items>,<ImsConfig1>[,<data1>[,<ImsConfig2>[,<data2>[...]]]]]	OK	
IMS setting configuration			
Set	AT+UIMSCFG=0[,<num_of_Config_items>,<ImsConfig1>[,<data1>[,<ImsConfig2>[,<data2>[...]]]]]	OK	
IMS setting reading			
Read	AT+UIMSCFG=1[,<num_of_Config_items>,<ImsConfig1>[,<ImsConfig2>[...]]]	[+UIMSCFG :<ImsConfig1>,<data1> [+UIMSCFG :<ImsConfig2>,<data2> [..]]] OK	AT+UIMSCFG=1 +UIMSCFG: 50,0 +UIMSCFG: 51,"ims" +UIMSCFG: 53,2 +UIMSCFG: 253,1 OK
Test	AT+UIMSCFG=?	+UIMSCFG: (list of supported <op_code>'s),(list of supported <ImsConfig>) OK	+UIMSCFG: (0-1),(50,51,53,253) OK

8.3.3 Defined values

Parameter	Type	Description
<op_code>	Number	Allowed values: • 0: sets/configures the corresponding <data> of the IMS configuration data specified in <ImsConfig>. It can be used to set/configure more than one <ImsConfig>s. If the <ImsConfig> parameter is omitted, then the command will set the default <data> of all <ImsConfig>s. • 1: gets the configured <data> value of a specific IMS configuration data mentioned by <ImsConfig>. It can be used to retrieve more than one <ImsConfig>s. If the <ImsConfig> parameter is omitted, then the command will return the <data> of all <ImsConfig>s.
<data>	Number / String	Contains the numeric data if <ImsConfig> is a numeric parameter. Otherwise it will contain the string data if <ImsConfig> is a string parameter.
<num_of_Config_items>	Number	Number of IMS configuration elements to be set or retrieved.
<ImsConfig>	Number	Allowed values: • 9: 3GPP_CONFERENCE_URI <data> is a string parameter and defines the Conference Factory URI. See 3GPP TS 24.166 [136], Conf_Factory_URI; it should be a null terminated string, the maximum size is 255. The default and factory-programmed value differ depending on product version: o LARA-R211 - The default and factory-programmed value is "". ☞ LARA-R211 - Configures the <data> parameter with the Conference Factory URI of the MNO to enable multiparty calls over VoLTE. ☞ LARA-R203 LARA-R202 LARA-R211 - If <data>="", the Conference Factory URI is automatically generated with the following syntax: "sip:mmtel@conf-factory.<domain>" where <domain> is o ims.mnc<mnc>.mcc<mcc>.3gppnetwork.org in case of no ISIM present o Specific operator domain if EF_DOMAIN is valid and present in ISIM For more details see 3GPP 23.003 [117] chapter 13.10. • 50: AUTOLOGIN_MODE <data> is an integer parameter and set the autologin mode of IMS. Allowed values: o 0 (default value): AUTOLOGIN_NEVER o 1: AUTOLOGIN_ALWAYS

Parameter	Type	Description
		o 2: AUTOLOGIN_HOME_NETWORK The factory-programmed value differs depending on the product version: o LARA-R202 / LARA-R203 / LARA-R211 / TOBY-R2 - The factory-programmed value is 1 (AUTOLOGIN_ALWAYS). o LARA-R204 - The factory-programmed value is 2 (AUTOLOGIN_HOME_NETWORK). o LARA-R204 - The factory-programmed value is 1 (AUTOLOGIN_ALWAYS) in LARA-R204-02B-00. • 51: APN_NAME <data> is a string parameter representing the IMS APN name to be used for the VoLTE; it shall be a null terminated string. The maximum length is 255. The default and factory-programmed value differ depending on product version: o LARA-R204 - The factory-programmed value is "IMS". On LARA-R204-02B-00 / LARA-R204-02B-01 the factory-programmed value is "VZWIMS". o LARA-R204 - The default value is "ims". o LARA-R202 / LARA-R203 / LARA-R211 / TOBY-R2 - The default and factory-programmed value is "ims". • 53: PREFFERED_PDPTYPE <data> is an integer parameter and represents the preferred PDP type for IMS. Allowed values: o 0: IPv4 o 1: IPv6 o 2 (default and factory-programmed value): IPv4v6 • 162: IMSI_in_Contact_header <data> is an integer parameter and enables the insertion of the IMSI in the SIP "contact" header. To apply the new setting the module must re-register to the network (AT+COPS=2 / AT+COPS=0 or AT+CFUN=4 / AT+CFUN=1 or AT+CFUN=16). The flag is configured as per operator requirements, and it is also updated by +UMNOCONF AT command. Allowed values are: o 0: IMSI not present in SIP "contact" header o 1: IMSI present in SIP "contact" header The default and factory-programmed value differs depending on product version: o LARA-R202 / LARA-R203 - The factory-programmed value is 1. • 164: aSRVCC_configuration <data> is an integer parameter and enables/disables the aSRVCC support. To apply the new setting the module must re-register to the network (AT+COPS=2 / AT+COPS=0 or AT+CFUN=4 / AT+CFUN=1 or AT+CFUN=16). The flag is configured as per operator requirements, and it is also updated by +UMNOCONF AT command (<mode>=0 (regulatory) or <mode>=2 (AT&T) or <mode>=5 (T-Mobile) enable the feature). In order to be compliant with certification requirements, the feature shall be enabled in AT&T and T-mobile configuration. Allowed values are: o 0: aSRVCC call disabled o 1 (default and factory-programmed value): aSRVCC call enabled • 200: XCAP_APN <data> is a string parameter and represents the APN name to be used for supplementary service provisioning; it should be a null terminated string. The maximum length is 255. The factory-programmed value differs depending on product version: o LARA-R204 - The factory-programmed value is "NONE". o LARA-R211 - The factory-programmed value is "ims". o LARA-R202 / LARA-R203 / TOBY-R2 - The factory-programmed value is "nxtgenphone". o LARA-R202 / LARA-R203 / LARA-R204 / LARA-R211 / TOBY-R2 - The default value is "ims". ☞ LARA-R211 Configures the <data> parameter of <ImsConfig>=200 key with the APN name of the MNO to enable supplementary services over VoLTE • 201: XCAP_ROOT_URI

Parameter	Type	Description
		<data> is a string parameter and represents the Root URI of the XCAP server; it should be a null terminated string. The "http//" prefix is required. The maximum length is 255. The default and factory-programmed value is an empty string. • 202: XCAP_AUTH_USER_NAME <data> is a string parameter and represents the username to be used for HTTP authentication of XCAP requests; it should be a null terminated string. The maximum length is 255. The default and factory-programmed value is an empty string. • 203: XCAP_AUTH_PASSWORD <data> is a string parameter and represents the user password to be used for HTTP authentication of XCAP requests; it should be a null terminated string. The maximum length is 255. The default and factory-programmed value is an empty string. • 204: XCAP_TRANSPORT_TYPE <data> is an integer parameter and represents the transport type to be used for XCAP Requests. Allowed values: o 0 (default and factory-programmed value): TRANSPORT_HTTP o 1: TRANSPORT_HTTPS o 2: TRANSPORT_HTTPS_PREFFERED • 205: XCAP_Bearer_Deactivation_Timer <data> is an integer parameter and represents the time in seconds after which IMS will automatically deactivate the XCAP bearer with APN defined by <ImsConfig>=200, if it has been activated by IMS itself (i.e. if it was not active during Supplementary Services related AT command execution). According to AT&T <CDR-LTE-1982> requirement (Supplementary Services Configuration), the XCAP shall be used for supplementary services regardless the RAT and IMS registration status. Allowed values: o The range goes from 0 to 65535 o 0: deactivates the XCAP bearer upon XCAP completion o 65535: never deactivates the XCAP bearer o Default and factory-programmed value: 3 • 253: SIP_URI_FORMAT <data> is an integer parameter and represents the URI format to be used for converting MSISDN numbers into URI's. Allowed values: o 0: URI_NONE o 1: URI_SIP o 2: URI_TEL The default and factory-programmed value differs depending on product version: o LARA-R204 - The factory-programmed value is 2. o LARA-R204 - The default value is 1. o LARA-R202 / LARA-R203 / LARA-R211 / TOBY-R2 - The default and factory-programmed value is 1. • 264: VoPS_registration <data> is an integer parameter and enables the VoPS support check. The IMS will register only if VoPS is declared as supported by the network. Allowed values are: o 0: VoPS support check disabled o 1: VoPS support check enabled The default and factory-programmed value differs depending on product version: o LARA-R204 - The default and factory-programmed value is 0. o LARA-R202 / LARA-R203 / LARA-R211 / TOBY-R2 - The factory-programmed value is 1. The VoPS support can be checked via +CIREP AT command. • 269: VoLTE_conference <data> is an integer parameter and configures the VoLTE conference subscription event. Allowed values are: o 0: disable the subscription event o 1 (default and factory-programmed value): enable the subscription event

8.3.4 Notes

LARA-R202 / LARA-R203 / TOBY-R2

- Some keys are differently configured depending on the MNO set by means of +UMNOCONF AT command. In the table below are listed the keys that are differently set in case the module is registered on AT&T or T-Mobile MNO:

Key	AT&T	T-Mobile
9	"sip:n-way_voice@one.att.net"	"sip:conference@volte.tmo.com"
200	"nxtgenphone"	"NONE"
269	1	0
353	0	1
354	0	1

LARA-R203

- <ImsConfig> = 164, 205 are not supported.

TOBY-R2

- <ImsConfig> = 205, 269 are not supported.
- <ImsConfig> = 162 is not supported by TOBY-R200-02B-01 and TOBY-R202-02B-01.

TOBY-R2

- <ImsConfig> = 164 is not supported.

LARA-R204

- <ImsConfig> = 162, 164, 205 and 269 are not supported.
- <ImsConfig> = 264 has not effect.

LARA-R211

- The values corresponding to the key <ImsConfig> = 9, 162, 200, 201, 202, 203, 204 must be properly configured by the user.
- <ImsConfig> = 164 and 205 are not supported.
- Configure the <ImsConfig> = 200 in order to make XCAP work. The same APN used for internet traffic must be used.

8.4 IMS client registration / deregistration in network +UIMSREG

+UIMSREG						
Modules	LARA-R202 LARA-R203 LARA-R204 LARA-R211 TOBY-R2					
Attributes	**Syntax**	**PIN required**	**Settings saved**	**Can be aborted**	**Response time**	**Error reference**
	full	No	No	No	-	+CME Error

8.4.1 Description

Sends the registration/de-registration request to the network.

The AT+UIMSREG=0 command can be used during certification to trigger an IMS deregistration, but the IMS automatic registration feature (AT+UIMSCFG=0,1,50,1 or AT+UIMSCFG=0,1,50,2) has higher priority: in case of LTE cell reselection the IMS registration will be restarted. When the IMS shall be steadily deregistered, issue AT+UIMSCFG=0,1,50,0 before issuing AT+UIMSREG=0.

☞ Only an IMS client session is possible at any given time. The user must first configure the session's parameters using AT+UIMSCFG command before using AT+UIMSREG.

☞ The final result code to the set command only implies that the request is success/failure. It does not guarantee the IMS client registration. The registration status of the IMS client is provided by means of the +CIREG AT command.

8.4.2 Syntax

Type	Syntax	Response	Example
Set	AT+UIMSREG=<mode>	OK	AT+UIMSREG=1

Type	Syntax	Response	Example
			OK
Test	AT+UIMSREG=?	+UIMSREG: (list of supported <mode>s) OK	+UIMSREG: (0,1) OK

8.4.3 Defined values

Parameter	Type	Description
<mode>	Number	Allowed values: • 0 (default value): deregister the IMS client from network • 1: register the IMS client to network

8.5 IMS configuration setting +UIMSCONF

+UIMSCONF						
Modules	TOBY-L201 MPCI-L201					
Attributes	Syntax	PIN required	Settings saved	Can be aborted	Response time	Error reference
	full	No	NVM	No	-	+CME Error

8.5.1 Description

Access several configuration and settings related to IP Multimedia Subsystem (IMS).

8.5.2 Syntax

Type	Syntax	Response	Example
Set	AT+UIMSCONF=<key_name>[,<value>[,<more_values>]]	OK	AT+UIMSCONF="KEY_IMS_PDP_APN","IMS",1 OK AT+UIMSCONF="KEY_MTU_SIZE",2500 OK
Test	AT+UIMSCONF=?	+UIMSCONF: (list of supported <key_name>s),,(list of supported <more_values>s) OK	+UIMSCONF: ("KEY_IMS_PDP_APN","KEY_IMS_PDP_CID","KEY_IMS_PDP_TYPE","KEY_AUTH_TYPE_AKA","KEY_AUTH_TYPE_AKAV2", "KEY_AUTH_TYPE_MD5","KEY_SEC_AGREE", "KEY_XDM_URL","KEY_PASSWORD","KEY_HOME_NETWORK_DOMAIN","KEY_PRIVATE_IDENTITY","KEY_PUBLIC_IDENTITY","KEY_CONFIG_SOFT_SIM","KEY_CONFIG_SOFT_SIM_K", "KEY_CONFIG_SOFT_SIM_OP","KEY_PCSCF_SERVER_ADDRESS","KEY_DNS_SERVER","KEY_SIP_TIMER_T1","KEY_SIP_TIMER_T2","KEY_SIP_TIMER_T4","KEY_SIP_TIMER_TF","KEY_MTU_SIZE", "KEY_IMS_CLIENT_PORT","KEY_REG_EXPIRES","KEY_MAX_REG_EXPIRES","KEY_RETRY_BASE_TIME","KEY_RETRY_MAX_TIME","KEY_REG_BARRED_USER_ID","KEY_EXPLICIT_UNSUB_REG_EVENT", "KEY_PCSCF_BACKOFF_PREFERENCE","KEY_SMSC_NUMBER", "KEY_SMSC_URI","KEY_MO_SMS_FORMAT", "KEY_MO_SMS_ENCODING","KEY_QOS_PREFERENCE","KEY_PDP_BEARER_MODE", "KEY_DOMAIN_PREFERENCE","KEY_SMS_PREFERENCE","KEY_IMS_SUPPORT","KEY_IMS_MWI_SUPPORT","KEY_IMS_SIGCOMP_SUPPORT","KEY_IMS_RAT"),,(0-3) OK

8.5.3 Defined values

Parameter	Type	Description
<key_name>	String	Allowed configurations: • "KEY_IMS_PDP_APN": IMS Access Point Name. <value> type is a string parameter. The factory-programmed and default value is "IMS". • "KEY_IMS_PDP_CID": PDP context identifier to be used for IMS signalling protocols. <value> is a numeric parameter in range [0-8], where 0 indicates that the target will use any free PDP context identifier. The factory-programmed and default value is 0. • "KEY_IMS_PDP_TYPE": IMS PDP type. <value> is a string parameter with these allowed values: "IPV4", "IPV6", "IPV4V6". The factory-programmed and default value is "IPV4V6". • "KEY_AUTH_TYPE_AKA": configures the AKAv1 MD5 Digest Authentication. The Security Agreement must be explicitly enabled with the related <key_name>. <value> is a string parameter with these allowed values: "true", "false". The factory-programmed and default value is "true". • "KEY_AUTH_TYPE_AKAV2": configures the AKAv2 MD5 Digest Authentication. The Security Agreement must be explicitly disabled with the related <key_name>. <value> is a string parameter with these allowed values: "true","false". The factory-programmed and default value is "false". • "KEY_AUTH_TYPE_MD5": configures MD5 Digest Authentication. The Security Agreement must be explicitly disabled with the related <key_name>. <value> is a string parameter with these allowed values: "true","false". The factory-programmed and default value is "false". • "KEY_SEC_AGREE": configures the Security Agreement and IPsec. <value> is a string parameter with these allowed values: "true","false". The factory-programmed and default value is "true". • "KEY_XDM_URL": URI of the HTTP server hosting the SS document. The URL shall include the "http://" or the "https://" prefix. <value> is a string parameter. The factory-programmed and default value is an empty string. • "KEY_PASSWORD": password for IMS MD5 Digest Authentication and XCAP Authentication. <value> is a string parameter. The factory-programmed and default value is an empty string. • "KEY_HOME_NETWORK_DOMAIN": Home Domain/Realm. If not provided it will be read from the UICC. <value> is a string parameter. The factory-programmed and default value is an empty string. • "KEY_PRIVATE_IDENTITY": private User ID for IMS Registration and XDM Authentication (IMPI). If not provided it will be read from UICC. <value> is a string parameter. The factory-programmed and default value is an empty string. • "KEY_PUBLIC_IDENTITY": public User ID. It must be a SIP URI (IMPU). If not provided it will be read from the UICC. <value> is a string parameter. The factory-programmed and default value is an empty string. • "KEY_CONFIG_SOFT_SIM": configures the Software SIM feature. If the UICC does not support the ISIM application, the feature will perform the AKA authentication with its own K and OP values. <value> is a string parameter with these allowed values: "true","false". The factory-programmed and default value is "false". • "KEY_CONFIG_SOFT_SIM_K": Software SIM secret K. <value> is a hex encoded string. The factory-programmed and default value is an empty string. • "KEY_CONFIG_SOFT_SIM_OP": Software SIM secret OP. <value> is a hex encoded string. The factory-programmed and default value is an empty string. • "KEY_PCSCF_SERVER_ADDRESS": P-CSCF IP Address/Domain[:port] where port is optional. If not provided it will read from PCO exchange during PDN creation, DHCP server or UICC in that order. The IP address can be either IPV4 or IPV6. In case of IPV6 it must be enclosed in square brackets []. E.g. [2001::1]:4060 where 2001::1 is the IPV6 address and 4060 is the port. <value> is a string parameter. The factory-programmed and default value is an empty string. • "KEY_DNS_SERVER": DNS IP address[:port] where port is optional. If the address is not provided it will be read from PCO exchange during PDN creation, DHCP server or UICC in that

Parameter	Type	Description
		order. In case of IPV6 it must be enclosed in square brackets []. E.g. [2001::1]:4060 where 2001::1 is the IPV6 address and 4060 is the port. <value> is a string parameter. The factory-programmed and default value is an empty string. • "KEY_SIP_TIMER_T1": the Timer_T1 represents an estimate of the round trip time of the IMS traffic (UE <-> P-CSCF). <value> is a numeric parameter measured in milliseconds. The range is [1- 4294967295] while the factory-programmed and default value depend on the +UMNOCONF command: 2000 if the <MNO> parameter is set to 0 (regulatory MNO), 3000 if the <MNO> parameter is set to 3 (Verizon). • "KEY_SIP_TIMER_T2": the Timer_T2 represents an estimate for the maximum retransmit interval for SIP non-INVITE requests and INVITE responses. <value> is a numeric parameter measured in milliseconds. The range is [1-4294967295] while factory-programmed and the default value is 16000. • "KEY_SIP_TIMER_T4": the Timer_T4 represents an estimate for maximum lifetime of a SIP message. <value> is a numeric parameter measured in milliseconds. The range is [1-4294967295] while the factory-programmed and default value is 17000. • "KEY_SIP_TIMER_TF": the Timer_TF represents the timeout of a SIP non INVITE transaction, defined in RFC3261. <value> is a numeric parameter measured in milliseconds. The range is [1-4294967295] and the default value 64000. Verizon typically uses a value of 30000. • "KEY_MTU_SIZE": the Maximum Transmission Unit (MTU) size as expected by the network operators to control the IMS message fragmentation. <value> is a numeric parameter measured in bytes. The range is [0-65535] while the factory-programmed and default value is 1500. • "KEY_IMS_CLIENT_PORT": port used by the UE's SIP application. <value> is a numeric parameter. The range is [200-65535]. The factory-programmed and default value is 5060. • "KEY_REG_EXPIRES": IMS registration expiration time that will be requested. <value> is a numeric parameter measured in seconds. The range is [1-4294967295] while the factory-programmed and default value is 600000. • "KEY_MAX_REG_EXPIRES": maximum IMS registration expiration time that will be requested. On receiving a "423 interval too brief" response to a REGISTER, the next REGISTER request will contain an expire value which will be the minimum between the input value and the received response. <value> is a numeric parameter measured in seconds. The range is [1-4294967295] while the factory-programmed and default value is 600000. • "KEY_RETRY_BASE_TIME": Retry Base Time used for the backoff timer. <value> is a numeric parameter measured in seconds. The range is [1-2147483] while the factory-programmed and default value is 30. • "KEY_RETRY_MAX_TIME": Retry Max Time used for the backoff timer. <value> is a numeric parameter measured in seconds. The range is [1-2147483] while the factory-programmed and default value is 1800. • "KEY_REG_BARRED_USER_ID": configures the Use Barred User ID in Registration and De-Registration feature. If disabled the UE will use the default public user identity provided by the network (first entry of the P-ASSOCIATED-URI header). <value> is a string parameter with these allowed values: "true", "false". The factory-programmed and default value is "true". • "KEY_EXPLICIT_UNSUB_REG_EVENT": controls the unsubscription of the Registration Event Package during deregistration. This feature is required by Verizon. <value> is a string parameter with these allowed values: "true", "false". The factory-programmed and default value is "false". • "KEY_PCSCF_BACKOFF_PREFERENCE": Backoff on P-CSCF change due to server failure. The backoff is applied for each server of after the whole list has been tried. <value> is a string parameter with these allowed values: "LIST" or "INDIVIDUAL". The factory-programmed and default value is "LIST". • "KEY_SMSC_NUMBER": SMSC phone number. <value> is a string parameter. The factory-programmed and default value is an empty string. • "KEY_SMSC_URI": SMSC URI. It should be a SIP or telephonic URI. <value> is a string parameter. The factory-programmed and default value is an empty string. • "KEY_MO_SMS_FORMAT": SMS format to be used for Mobile Originated SMS.

Parameter	Type	Description
		<value> is a string parameter with these allowed values: "3gpp" or "3gpp2". The factory-programmed and default value is "3gpp". • "KEY_MO_SMS_ENCODING": SMS encoding to be used for Mobile Originated SMS. <value> is a string parameter with these allowed values: "gsm7", "ascii7", "ucs2". The factory-programmed and default value is "gsm7". • "KEY_QOS_PREFERENCE": QoS Precondition during SIP call set-up. <value> is a string parameter with these allowed values: "AUTO" or "NONE". The factory-programmed and default value is "AUTO". • "KEY_PDP_BEARER_MODE": QoS Allocation Mode determines whether the UE or the NW will request the QoS reservation. <value> is a string parameter with these allowed values: "UE", "NW","AUTO". The factory-programmed and default value is "AUTO". In "AUTO" mode the UE will initiate the QoS allocation only if the NW does not. • "KEY_DOMAIN_PREFERENCE": Domain Preference for the IMS Service Continuity feature. <value> is a string parameter with these allowed values: "CS_ONLY", "PS_ONLY", "CS_PREF", "PS_PREF". The factory-programmed and default value is "PS_PREF". • "KEY_SMS_PREFERENCE": preferred service used for MO SMS. <value> is a string parameter with these allowed values: "IMS_PREF", "CS_PREF", "CS_ONLY", "PS_ONLY". The factory-programmed and default value is "IMS_PREF". • "KEY_IMS_SUPPORT": configures the IMS support and registration. <value> is a string parameter with the following allowed values: "true" or "false". The factory-programmed and default value is "true". • "KEY_IMS_MWI_SUPPORT": configures the MWI Event Package Support for IMS. <value> is a string parameter with these allowed values: "true" or "false". The factory-programmed and default value is "true". • "KEY_IMS_SIGCOMP_SUPPORT": configures the Signal Compression Support for IMS Signaling feature. <value> is a string parameter with these allowed values: "true" or "false". The factory-programmed and default value is "false". • "KEY_IMS_RAT": configures the RAT allowed for IMS registration. <value> is a string parameter with these allowed values: o "all": IMS will try to register on all the supported RATs o "lteonly" (factory-programmed value): IMS will try to register on LTE RAT only ☞ Since Verizon configuration is LTE only then this key must be set to "lteonly" to prevent useless IMS registration tries when in 3G (roaming). • "KEY_IMS_SMS_SEND_OK_WRITE_UICC": allows the storing of SMSes correctly sent. <value> is a string parameter with these allowed values: "true", "false". The factory-programmed and default value is "false". • "KEY_IMS_SMS_SEND_NOK_WRITE_UICC": allows the storing of SMSes not sent due to network errors. <value> is a string parameter with these allowed values: "true", "false". The factory-programmed and default value is "false".
<more_values>	Numeric	Sets the configuration update: • 0 (default value): the input configuration is immediately set and saved to NVM • 1: the configuration is saved to NVM; the IMS client will wait for other parameters to take effect. When inputting the final configuration command then <more_values> should be set to zero for the whole configuration to take effect • 2: the input configuration is immediately set but it is not saved to NVM • 3: the configuration is volatile; the IMS client will wait for other parameters to take effect. When inputting the final configuration command then <more_values> should be set to zero for the whole configuration to take effect

8.5.4 Notes

TOBY-L201 / MPCI-L201

- The "KEY_MO_SMS_FORMAT" configuration is not stored in NVM.

8.6 Read IMS configuration +UIMSRCONF

+UIMSRCONF						
Modules	TOBY-L201 MPCI-L201					
Attributes	**Syntax**	**PIN required**	**Settings saved**	**Can be aborted**	**Response time**	**Error reference**
	full	No	No	No	-	+CME Error

8.6.1 Description

Read configuration parameters related to IMS.

8.6.2 Syntax

Type	Syntax	Response	Example
Set	AT+UIMSRCONF=<key_name>	+UIMSRCONF: <value> OK	AT+UIMSRCONF="KEY_MTU_SIZE" +UIMSRCONF: 2500 OK
Test	AT+UIMSRCONF=?	+UIMSRCONF: (list of supported <key_name>s) OK	+UIMSRCONF: ("KEY_IMS_PDP_APN","KEY_IMS_PDP_CID","KEY_IMS_PDP_TYPE","KEY_AUTH_TYPE_AKA","KEY_AUTH_TYPE_AKAV2", "KEY_AUTH_TYPE_MD5","KEY_SEC_AGREE", "KEY_XDM_URL","KEY_PASSWORD","KEY_HOME_NETWORK_DOMAIN","KEY_PRIVATE_IDENTITY","KEY_PUBLIC_IDENTITY", "KEY_CONFIG_SOFT_SIM","KEY_CONFIG_SOFT_SIM_K","KEY_CONFIG_SOFT_SIM_OP","KEY_PCSCF_SERVER_ADDRESS","KEY_DNS_SERVER","KEY_SIP_TIMER_T1","KEY_SIP_TIMER_T2", "KEY_SIP_TIMER_T4","KEY_SIP_TIMER_TF","KEY_MTU_SIZE","KEY_IMS_CLIENT_PORT","KEY_REG_EXPIRES","KEY_MAX_REG_EXPIRES","KEY_RETRY_BASE_TIME","KEY_RETRY_MAX_TIME", "KEY_REG_BARRED_USER_ID","KEY_EXPLICIT_UNSUB_REG_EVENT","KEY_PCSCF_BACKOFF_PREFERENCE","KEY_SMSC_NUMBER", "KEY_SMSC_URI","KEY_MO_SMS_FORMAT", "KEY_MO_SMS_ENCODING", "KEY_QOS_PREFERENCE","KEY_PDP_BEARER_MODE", "KEY_DOMAIN_PREFERENCE","KEY_SMS_PREFERENCE","KEY_IMS_SUPPORT","KEY_IMS_MWI_SUPPORT","KEY_IMS_SIGCOMP_SUPPORT","KEY_IMS_RAT") OK

8.6.3 Defined values

Parameter	Type	Description
<key_name>	String	See the +UIMSCONF parameter description
<value>	String	See the +UIMSCONF parameter description

8.7 IMS registration information +CIREG

+CIREG						
Modules	TOBY-L201 MPCI-L201					
	LARA-R202 LARA-R203 LARA-R204 LARA-R211 TOBY-R2					
Attributes	**Syntax**	**PIN required**	**Settings saved**	**Can be aborted**	**Response time**	**Error reference**
	full	No	No	No	-	+CME Error

8.7.1 Description

Configures the IMS registration information. Depending on the <n> parameter value a URC can be issued when the MT's IMS registration information changes:

- +CIREGU: <reg_info> if <n>=1
- +CIREGU: <reg_info>[,<ext_info>] if <n>=2

The read command provides the same information issued by the URC together with the current value of <n> parameter.

8.7.2 Syntax

Type	Syntax	Response	Example
Set	AT+CIREG=[<n>]	OK	AT+CIREG=1 OK
Read	AT+CIREG?	+CIREG: <n>,<reg_info>[,<ext_info>] OK	+CIREG: 1,1 OK
Test	AT+CIREG=?	+CIREG: (list of supported <n>s) OK	+CIREG: (0,1) OK
URC		+CIREGU: <reg_info>[,<ext_info>]	+CIREGU: 0

8.7.3 Defined values

Parameter	Type	Description
<n>	Number	Configures the reporting of changes in the MT's IMS registration information: • 0: reporting URC disabled • 1: reporting URC +CIREGU: <reg_info> enabled • 2: extended reporting URC +CIREGU: <reg_info>,<ext_info> enabled
<reg_info>	Number	Indicates the IMS registration status. The MT is seen as registered as long as one or more of its public user identities are registered with any of its contact addresses, see 3GPP TS 24.229 [103]. • 0: not registered • 1: registered The parameter shows whether one or more of the public user identities are registered
<ext_info>	Number	Numeric value in hexadecimal format. The range goes from 1 to FFFFFFFF. It is a sum of hexadecimal values, each representing a particular IMS capability of the MT. The MT can have IMS capabilities not covered by the below list. This parameter is not present if <reg_info>=0. • 1: RTP-based transfer of voice according to MMTEL, see 3GPP TS 24.173 [101]. This functionality can not be indicated if the UE is not available for voice over PS, see 3GPP TS 24.229 [103] • 2: RTP-based transfer of text according to MMTEL, see 3GPP TS 24.173 [101] • 4: SMS using IMS functionality, see 3GPP TS 24.341 [102] • 8: RTP-based transfer of video according to MMTEL, see 3GPP TS 24.173 [101] The hexadecimal values 10, 20, 40 and 80000 are reserved. It shows the status of the MT's IMS capabilities. For <ext_info>, all relevant values are always summarized and reported as a complete set of IMS capabilities in the URC.

8.8 IMS network reporting +CIREP

+CIREP						
Modules	LARA-R202 LARA-R203 LARA-R211 TOBY-R2					
Attributes	**Syntax**	**PIN required**	**Settings saved**	**Can be aborted**	**Response time**	**Error reference**
	full	No	No	No	-	+CME Error

8.8.1 Description

Enables or disables the reporting of SRVCC handover information (see 3GPP TS 24.237 [151]) and of IMS Voice Over PS sessions indicator information, by means of these URCs:

- **+CIREPI**: IMS Voice Over PS sessions (IMSVOPS) supported indication from the network
- **+CIREPH**: Single Radio Voice Call Continuity (SRVCC) handover information

8.8.2 Syntax

Type	Syntax	Response	Example
Set	AT+CIREP=<reporting>	OK	AT+CIREP=1 OK
Read	AT+CIREP?	+CIREP: <reporting>,<nwimsvops> OK	+CIREP: 1,1 OK
Test	AT+CIREP=?	+CIREP: (list of supported <reporting>s) OK	+CIREP: (0,1) OK
URC		+CIREPI: <nwimsvops>	+CIREPI: 1
URC		+CIREPH: <srvcch>	+CIREPH: 2

8.8.3 Defined values

Parameter	Type	Description
<reporting>	Number	Enables or disables reporting of changes in the IMS voice over PS session supported indication received from the network and reporting of SRVCC handover information: • 0 (default value): reporting disabled • 1: reporting enabled
<nwimsvops>	Number	Gives the last IMS Voice Over PS session(IMSVOPS) supported indication received from network: • 0: IMSVOPS support indication is not received from network, or is negative • 1: IMSVOPS support indication as received from network is positive
<srvcch>	Number	SRVCC handover information: • 0: PS to CS SRVCC handover has started in the CS domain ("Handover Command" indicating SRVCC received) • 1: PS to CS SRVCC handover successful ("Handover Complete" sent) • 2: PS to CS SRVCC handover cancelled ("Handover Failure" sent) • 3: PS to CS SRVCC handover, general non specific failure. It might be used e.g. in the case of handover cancellation as specified in 3GPP TS 24.301 [88] subclause 6.6.2

8.8.4 Notes

LARA-R203

- The +CIREPH URC is not issued.

8.9 Availability for SMS using IMS +CASIMS

+CASIMS						
Modules	TOBY-L201 MPCI-L201					
Attributes	Syntax	PIN required	Settings saved	Can be aborted	Response time	Error reference
	full	No	No	No	-	+CME Error

8.9.1 Description

Informs the MT whether the UE is currently available for SMS using IMS (see 3GPP TS 24.229 [103]).

The information can be used by the MT to determine the need to remain attached for non-EPS services, as defined in 3GPP TS 24.301 [88].

8.9.2 Syntax

Type	Syntax	Response	Example
Set	AT+CASIMS=[<state>]	OK	AT+CASIMS=1 OK
Read	AT+CASIMS?	+CASIMS: <state> OK	+CASIMS: 1 OK
Test	AT+CASIMS=?	+CASIMS: (list of supported <state>'s) OK	+CASIMS: (0,1) OK

8.9.3 Defined values

Parameter	Type	Description
<state>	Number	Status configuration: • 0 (default value): SMS using IMS is not available • 1: SMS using IMS is available

8.10 Availability for voice calls with IMS +CAVIMS

+CAVIMS						
Modules						
Attributes	Syntax	PIN required	Settings saved	Can be aborted	Response time	Error reference
	full	No	No	No	-	+CME Error

8.10.1 Description

Informs the MT whether the UE is currently available for voice calls with the IMS (see 3GPP TS 24.229 [103]). The information can be used by the MT to determine "IMS voice not available" as defined in 3GPP TS 24.301 [88], and for mobility management for IMS voice termination, see 3GPP TS 24.008 [12].

8.10.2 Syntax

Type	Syntax	Response	Example
Set	AT+CAVIMS=[<state>]	OK	AT+CAVIMS=0 OK
Read	AT+CAVIMS?	+CAVIMS: <state> OK	+CAVIMS: 1 OK
Test	AT+CAVIMS=?	+CAVIMS: (list of supported <state>s) OK	+CAVIMS: (0,1) OK

8.10.3 Defined values

Parameter	Type	Description
<state>	Number	Provides information about the UEs IMS voice call availability status • 0 (default value): voice calls with the IMS are not available • 1: voice calls with the IMS are available

8.11 UE's Mobility Management IMS Voice Termination +CMMIVT

+CMMIVT						
Modules	LARA-R202 LARA-R203 LARA-R211 TOBY-R2					
Attributes	Syntax	PIN required	Settings saved	Can be aborted	Response time	Error reference
	full	No	NVM	No	-	+CME Error

8.11.1 Description

Sets the MT to perfom additional procedures as specified in 3GPP TS 24.008 [12] and 3GPP TS 24.301 [88] to support terminating access domain selection by the network.

The read command returns the setting, independent of the current serving cell capability and independent of the current serving cell's access technology.

☞ See 3GPP TS 24.167 [110], subclause 5.31 for the definition of the UE's mobility management IMS voice termination values.

8.11.2 Syntax

Type	Syntax	Response	Example
Set	AT+CMMIVT=[<setting>]	OK	AT+CMMIVT=2 OK
Read	AT+CMMIVT?	+CMMIVT: <setting> OK	+CMMIVT: 1 OK
Test	AT+CMMIVT=?	+CMMIVT: (list of supported <setting>s) OK	+CMMIVT: (1-2) OK

8.11.3 Defined values

Parameter	Type	Description
<setting>	Number	Indicates the mobility management IMS voice termination preference of the UE: • 1 (default value): Mobility Management for IMS Voice Termination disabled • 2 (factory-programmed value): Mobility Management for IMS Voice Termination enabled

8.12 UE's voice domain preference UTRAN +CVDP

+CVDP						
Modules	LARA-R202 LARA-R203 LARA-R211 TOBY-R2					
Attributes	Syntax	PIN required	Settings saved	Can be aborted	Response time	Error reference
	full	Yes	NVM	No	-	+CME Error

8.12.1 Description

Sets the MT to operate according to the specified voice domain preference for UTRAN.

The read command returns the setting, independent of the current serving cell capability and independent of the current serving cell's access technology.

☞ See 3GPP TS 24.167 [110], subclause 5.30 for the definition for the UE's voice domain preference for UTRAN.

8.12.2 Syntax

Type	Syntax	Response	Example
Set	AT+CVDP=[<setting>]	OK	AT+CVDP=1 OK
Read	AT+CVDP?	+CVDP: <setting> OK	+CVDP: 1 OK
Test	AT+CVDP=?	+CVDP: (list of supported <setting>s) OK	+CVDP: (1-3) OK

8.12.3 Defined values

Parameter	Type	Description
<setting>	Number	UE voice domain preference. Allowed values: • 1 (factory-programmed and default value): CS voice only • 2: CS voice preferred, IMS PS voice as secondary • 3: IMS PS voice preferred, CS voice as secondary

8.13 UE's voice domain preference E-UTRAN +CEVDP

+CEVDP						
Modules	LARA-R202 LARA-R203 LARA-R211 TOBY-R2					
Attributes	**Syntax**	**PIN required**	**Settings saved**	**Can be aborted**	**Response time**	**Error reference**
	full	Yes	NVM	No	-	+CME Error

8.13.1 Description

Sets the MT to operate according to the specified voice domain preference for E-UTRAN. The read command returns the setting, independent of the current serving cell capability and independent of the current serving cell's access technology.

☞ See 3GPP TS 24.167 [110], subclause 5.27 for the definition for the UE's voice domain preference for E-UTRAN.

8.13.2 Syntax

Type	Syntax	Response	Example
Set	+CEVDP=[<setting>]	OK	AT+CEVDP=2 OK
Read	AT+CEVDP?	+CEVDP: <setting>	+CEVDP: 3 OK
Test	AT+CEVDP=?	+CEVDP: (list of supported <setting>s) OK	+CEVDP: (1-4) OK

8.13.3 Defined values

Parameter	Type	Description
<setting>	Number	UE voice domain preference. Allowed values: • 1: CS voice only • 2: CS voice preferred, IMS PS voice as secondary • 3 (factory-programmed and default value): IMS PS voice preferred, CS voice as secondary • 4: IMS PS voice only

8.13.4 Notes

LARA-R203

- Only <setting>=4 (factory-programmed value) is supported.

8.14 Domain configuration for MO SMS messages +UISMS

+UISMS						
Modules	LARA-R204					
Attributes	**Syntax**	**PIN required**	**Settings saved**	**Can be aborted**	**Response time**	**Error reference**
	full	No	No	No	-	+CME Error

8.14.1 Description

Configures for routing the outgoing SMS messages either over IMS or not over IMS.

If the selected configuration is IMS, then IMS settings will have higher priority while sending messages, other 2G/3G settings for MO SMS (e.g. +CGSMS settings) will be ignored.

8.14.2 Syntax

Type	Syntax	Response	Example
Set	AT+UISMS=<mode>	OK	AT+UISMS=1 OK
Read	AT+UISMS?	+UISMS: <mode> OK	+UISMS: 1 OK
Test	AT+UISMS=?	+UISMS: (list of supported <mode>s) OK	+UISMS: (0-1) OK

8.14.3 Defined values

Parameter	Type	Description
<mode>	Number	Allowed values: • 0: SMS messages are not sent over IMS • 1 (default value): SMS messages are preferably sent over IMS

8.15 MO SMS mode configuration +UICMGSMODE

+UICMGSMODE						
Modules	LARA-R204					
Attributes	**Syntax**	**PIN required**	**Settings saved**	**Can be aborted**	**Response time**	**Error reference**
	full	No	NVM	No	-	+CME Error

8.15.1 Description

Configures the SMS mode to 3GPP or 3GPP2 for outgoing SMS messages. The command is supported when SMS over IMS is enabled, see +UISMS.

The setting is also managed (can be read and written) over the air via OMA-DM.

8.15.2 Syntax

Type	Syntax	Response	Example
Set	AT+UICMGSMODE=<mode>	OK	AT+UICMGSMODE=2 OK
Test	AT+UICMGSMODE=?	+UICMGSMODE: (list of supported <mode>s) OK	+UICMGSMODE: (1,2) OK

8.15.3 Defined values

Parameter	Type	Description
<mode>	Number	Allowed values: • 1: 3GPP mode • 2 (default and factory-programmed value): 3GPP2 mode

8.16 Send 3GPP2 SMS message +UCMGS3GPP2

+UCMGS3GPP2						
Modules	LARA-R204					
Attributes	**Syntax**	**PIN required**	**Settings saved**	**Can be aborted**	**Response time**	**Error reference**
	full	No	No	No	Up to 3 min (<1 s for prompt ">" when present)	+CME Error

8.16.1 Description

Sends a message from a DTE to the network (SMS-SUBMIT) in 3GPP2 binary format. The command is similar to +CMGS but only PDU mode is accepted. The PDU message length can be up to 256 bytes, the format is specified in 3GPP2 C.S0015-0 [145].

☞ An error result code is returned when SMS over IP network option is not set, see +UISMS.

8.16.2 Syntax

Type	Syntax	Response	Example
Set	AT+UCMGS3GPP2=<length>,<type><CR> <PDU><Ctrl-Z/ESC>	OK	AT+UCMGS3GPP2=57,1,<CR> > 0000021002010200000407 02c616090d5c8c08250003200 000011e110539b4d069dc830 f3c7a74b7415b2f2d3eb7ee41d37a0 ad97969f5bf70 <Ctrl-Z>
Test	AT+UCMGS3GPP2=?	OK	

8.16.3 Defined values

Parameter	Type	Description
<length>	Number	PDU's length in octets
<type>	Number	Allowed values: • 0: invalid • 1: point to point • 2: acknowledge • 3: broadcast
<PDU>	String	Protocol Data Unit: each 8-bit octet of the PDU must be written as two IRA character long hexadecimal numbers, e.g. octet with integer value 42 must be written as two characters 2A (IRA 50 and 65). The PDU format is specified in 3GPP2 C.S0015-0 [145].

8.17 Enable/disable the 3GPP2 SMS URC +UCMT3GPP2

+UCMT3GPP2						
Modules	LARA-R204					
Attributes	**Syntax**	**PIN required**	**Settings saved**	**Can be aborted**	**Response time**	**Error reference**
	full	No	No	No	-	+CME Error

8.17.1 Description

Enables or disables the +UCMT3GPP2 URC that indicates the reception of a new MT SMS in 3GPP2 format. The URC is similar to +CMT (see the +CNMI AT command) but the syntax is different: see 3GPP2 C.S0015-0 [145] for a full description of the 3GPP2 SMS messages.

If the TA-TE link is busy the URCs are buffered and then flushed, otherwise they are forwarded directly to the TE.

8.17.2 Syntax

Type	Syntax	Response	Example
Set	AT+UCMT3GPP2=<type>	OK	AT+UCMT3GPP2=1 OK
Test	AT+UCMT3GPP2=?	+UCMT3GPP2: (list of supported <type>s) OK	+UCMT3GPP2: (0-1) OK
URC		**Text mode (+CMGF=1):** +UCMT3GPP2: <message_id>,<oa>,<scts>,[<priority>],[<privacy>],[<callback_number>],<encoding>,[<status>],<type>[,<num_sms>,<part>,<reference>],<length><CR><LF><text>	+UCMT3GPP2: 56911,"+393290284444","16/12/15,09:11:36",2,1,"+393290285555",9,,1,,,,4 Test
		PDU mode (+CMGF=0): +UCMT3GPP2: <length><CR> <PDU>	+UCMT3GPP2: 36 0000021002020D80 85181899199A1A9B1B9C1C80080E0 0031000000107482F4194DEF830

8.17.3 Defined values

Parameter	Type	Description
<type>	Number	Allowed values: • 0 (default value): URC disabled • 1: URC enabled
<message_id>	Number	Message Identifier
<oa>	String	Originating address
<scts>	String	Service center time stamp in format "yy/MM/dd,hh:mm:ss"
<priority>	Number	Priority: • 0: normal • 1: interactive • 2: urgent • 3: emergency
<privacy>	Number	Privacy: • 0: not restricted • 1: restrictive • 2: confidential • 3: secret
<callback_number>	String	Callback number
<encoding>	Number	Text encoding • 0: Octet, unspecified • 4: UCS2 • 9: GSM7 If the SMS encoding is different from the ones reported above, the message is always displayed in PDU mode.
<status>	Number	Consists of one hexadecimal digit. If present it indicates the message status or if an SMS error has occurred.
<type>	Number	Message type: • 0: reserved • 1: deliver • 2: submit • 3: cancellation • 4: delivery acknowledgment • 5: user acknowledgment • 6: read acknowledgment

Parameter	Type	Description
		• 7: deliver report • 8: submit report
<num_sms>	Number	Total number of SMS
<part>	Number	Fragment part number
<reference>	Number	Reference ID
<length>	Number	Two meanings: • In text mode: number of characters • In PDU mode: PDU's length in octets
<text>	String	Text of the SMS converted in the current character set in use (see the +CSCS AT command).
<PDU>	String	Protocol Data Unit: each 8-bit octet of the PDU must be written as two IRA character long hexadecimal numbers, e.g. octet with integer value 42 must be written as two characters 2A (IRA 50 and 65). The PDU format is specified in 3GPP2 C.S0015-0 [145].

9 Security

9.1 Enter PIN +CPIN

+CPIN						
Modules	All products					
Attributes	**Syntax**	**PIN required**	**Settings saved**	**Can be aborted**	**Response time**	**Error reference**
	full	No	No	No	< 10 s	+CME Error

9.1.1 Description

Enter PIN. If no PIN request is pending, the corresponding error code is returned. If a wrong PIN is given three times, the PUK must be inserted in place of the PIN, followed by the <newpin> which replaces the old pin in the SIM.

9.1.2 Syntax

Type	Syntax	Response	Example
Set	AT+CPIN=<pin>[,<newpin>]	OK	AT+CPIN="0933" OK
Read	AT+CPIN?	+CPIN: <code> OK	+CPIN: SIM PIN OK
Test	AT+CPIN=?	OK	

9.1.3 Defined values

Parameter	Type	Description
<pin>, <newpin>	String	4-to-8 characters long string of decimal digits. If only PIN is required, <newpin> is not to be entered. If PUK is required, <pin> must be the PUK and <newpin>, the new PIN code, must be entered as well.
<code>	String	• READY: MT is not pending for any password • SIM PIN: MT is waiting SIM PIN to be given • SIM PUK: MT is waiting SIM PUK to be given • SIM PIN2: MT is waiting SIM PIN2 to be given • SIM PUK2: MT is waiting SIM PUK2 to be given • PH-NET PIN: MT is waiting network personalization password to be given • PH-NETSUB PIN: MT is waiting network subset personalization password to be given • PH-SP PIN: MT is waiting service provider personalization password to be given • PH-CORP PIN: MT is waiting corporate personalization password to be given • PH-SIM PIN: MT is waiting phone to SIM/UICC card password to be given

9.1.4 Notes

- The command needs the SIM module to work correctly
- If PIN is not inserted the following situation can occur:
  AT+CMEE=2

  OK

  AT+COPS=0

  +CME ERROR: SIM PIN required

  AT+CMEE=0

  OK

  AT+COPS=0

ERROR

- To change the PIN the user must use the AT+CPWD="SC",<old_pin>,<new_pin> command (see Chapter 9.4 for details).
  Example:

  AT+CPWD="SC","1234","4321"

9.2 Read remaining SIM PIN attempts +UPINCNT

+UPINCNT						
Modules	All products					
Attributes	**Syntax**	**PIN required**	**Settings saved**	**Can be aborted**	**Response time**	**Error reference**
	partial	No	No	No	-	+CME Error

9.2.1 Description

Reads the remaining attempts for SIM PIN, SIM PIN2, SIM PUK, SIM PUK2 and some <lock_type>s.

9.2.2 Syntax

Type	Syntax	Response	Example
Action	AT+UPINCNT	+UPINCNT: <PIN_attempts>,<PIN2_attempts>,<PUK_attempts>,<PUK2_attempts> OK	+UPINCNT: 3,3,10,10 OK
Set	AT+UPINCNT=<lock_type>	+UPINCNT: <lock_type>,<Attempts_left>,<Timer_Penalty> OK	AT+UPINCNT=1 +UPINCNT: 1,3,0 OK
Test	AT+UPINCNT=?	[+UPINCNT: (list of supported <lock_type>s)] OK	OK

9.2.3 Defined values

Parameter	Type	Description
<PIN_attempts>	Number	Number of remaining attempts to enter PIN
<PIN2_attempts>	Number	Number of remaining attempts to enter PIN2
<PUK_attempts>	Number	Number of remaining attempts to enter PUK
<PUK2_attempts>	Number	Number of remaining attempts to enter PUK2
<lock_type>	Number	Allowed values: • 1: request number of remaining attempts to enter for PIN 1 • 2: request number of remaining attempts to enter for PIN 2 • 3: request number of remaining attempts to enter for PUK 1 • 4: request number of remaining attempts to enter for PUK 2 • 5: request number of remaining attempts to enter for Network Operator Lock • 6: request number of remaining attempts to enter for Network-Subset Lock • 7: request number of remaining attempts to enter for Service Provider Lock • 8: request number of remaining attempts to enter for Corporate lock • 9: request number of remaining attempts to enter for IMSI lock
<Attempts_left>	Number	Number of attempts left before blocked (0 means blocked, or not used)
<Timer_Penalty>	Number	Provides the time in minutes to wait before the possible next tries

9.2.4 Notes

- The PIN insertion is not mandatory in the action command and in the set command for <PIN_attempts>= 1, 2, 3, 4.

TOBY-L2 / MPCI-L2 / SARA-U2 / LISA-U2 / LISA-U1 / SARA-G3 / LEON-G1

- The set command is not supported.

- The information text response to the test command is not provided.

SARA-G4

- The set and test command are not supported.

9.3 Facility lock +CLCK

+CLCK						
Modules	TOBY-L4 TOBY-L2 MPCI-L2					
	LARA-R202 LARA-R203 LARA-R211 LARA-R220 LARA-R280 TOBY-R2					
	SARA-U2 LISA-U2 LISA-U1					
	SARA-G4 SARA-G3 LEON-G1					
Attributes	**Syntax**	**PIN required**	**Settings saved**	**Can be aborted**	**Response time**	**Error reference**
	full	Yes	No	Yes	Up to 3 min	+CME Error

9.3.1 Description

Locks, unlocks or interrogates an MT or a network facility <fac>. A password is normally needed to do such actions. When querying the status of a network service (<mode>=2) the information text response for "not active" case (<status>=0) is returned only if the service is not active for any <class>. Instead when querying the status of a network service (<mode>=2) asking for a specific <class>, the DUT sends a generic request. The command can be aborted if network facilities are set or interrogated.

☞ For <fac> "PN", "PU", "PP", "PC" and "PS" only <mode>=0 and <mode>=2 (unlock and query status) are always supported.

☞ For <fac> "PN", "PU", "PP", "PC" and "PS" <mode>=1 (lock status) is supported only if proper re-activation characteristic is enabled during personalization.

9.3.2 Syntax

Type	Syntax	Response	Example
Set	AT+CLCK=<fac>,<mode>[,<passwd>[,<class>]]	OK or +CLCK: <status>[,<class1>] [...] [+CLCK: <status>[,<class1>]] OK	AT+CLCK="SC",1,"0933" OK
Test	AT+CLCK=?	+CLCK: (list of supported <fac>s) OK	+CLCK: ("SC","PN","PU","PP","PC","PS","FD","AO","OI","OX","AI","IR","AB","AG","AC") OK

9.3.3 Defined values

Parameter	Type	Description

<fac>	String	Facility values:
		• "SC": SIM (PIN enabled/disabled)
		• "PN": Network Personalisation (see the 3GPP TS 22.022 [31])
		• "PU": network sUbset Personalisation (see the 3GPP TS 22.022 [31])
		• "PP": service Provider Personalisation (see the 3GPP TS 22.022 [31])
		• "PC": Corporate Personalisation (see the 3GPP TS 22.022 [31])
		• "PS": SIM/USIM Personalisation (see the 3GPP TS 22.022 [31])
		• "FD": SIM fixed dialling phonebook feature
		  o TOBY-L2 / MPCI-L2 - PIN2 is required as <passwd>
		  o TOBY-L4 / LARA-R2 / TOBY-R2 / SARA-U2 / LISA-U2 / LISA-U1 / SARA-G3 / LEON-G1 - PIN2 is required if the PIN2 authentication has not been done during the current session
		• "AO": BAR (Bar All Outgoing Calls)
		• "OI": BOIC (Bar Outgoing International Calls)

Parameter	Type	Description
		• "OX": BOIC-exHC(Bar Outgoing International Calls except to Home Country) • "AI": BAIC (Bar All Incoming Calls) • "IR": BIC-Roam (Bar Incoming Calls when Roaming outside the home country) • "AB": All Barring services (applicable only for <mode>=0) • "AG": All outGoing barring services (applicable only for <mode>=0) • "AC": All inComing barring services (applicable only for <mode>=0) • "CS": CNTRL (lock CoNTRoL surface (e.g. phone keyboard)) (see the 3GPP TS 27.007 [2]) • "PF": Lock Phone to the very First inserted SIM/UICC card (see the 3GPP TS 27.007 [2]) • "NT": Barr incoming calls from numbers Not stored to TA memory (see the 3GPP TS 27.007 [2]) • "NM": Barr incoming calls from numbers Not stored to MT memory (see 3GPP TS 27.007 [2]) • "NS": Barr incoming calls from numbers Not stored to SIM/UICC memory (see the 3GPP TS 27.007 [2]) • "NA": Barr incoming calls from numbers Not stored in any memory (see the 3GPP TS 27.007 [2])
<mode>	Number	• 0: unlock • 1: lock • 2: query status
<status>	Number	• 0: not active • 1: active
<passwd>	String	Shall be the same as password specified for the facility from the MT user interface or with the +CPWD command
<class>	Number	Sum of numbers each representing a class of information. The default value is 7 (voice + data + fax): • 1: voice • 2: data • 4: FAX • 8: short message service • 16: data circuit sync • 32: data circuit async • 64: dedicated packet access • 128: dedicated PAD access

9.3.4 Notes

TOBY-L4 / SARA-U2 / LISA-U2 / LISA-U1 / SARA-G3 / LEON-G1

- <fac>="CS", "PF", "NT", "NM", "NS", "NA" are not supported.

SARA-G4

- <fac>="AB", "AG", "AC", "CS", "PF", "NT", "NM", "NS", "NA" are not supported.

LARA-R2 / TOBY-R2

- Reboot the module to make effective the lock configuration for <fac>="PN", "PU", "PP", "PC" and "PS".

TOBY-L2 / MPCI-L2

- Reboot the module to make effective the unlock configuration.

TOBY-L200 / TOBY-L210-62S / TOBY-L220 / MPCI-L200 / MPCI-L220

- The FDN check for PS data calls is not supported.

TOBY-L200-00S / TOBY-L201 / TOBY-L210-00S / MPCI-L200-00S / MPCI-L201 / MPCI-L210-00S

- The FDN check for SMS is not supported.

TOBY-L201 / MPCI-L201

- In AT&T configuration (see the +UMNOCONF AT command) the FDN check for PS data calls is not supported.

TOBY-L210-60S / MPCI-L210-60S

- <fac>="AO", "OI", "OX", "AI", "IR", "AB", "AG", "AC" and "NS" are not supported.

TOBY-L210-62S

- <fac>="AO", "OI", "OX", "AI", "IR" are not allowed if the VoLTE service is not available.

9.4 Change password +CPWD

+CPWD						
Modules	All products					
Attributes	**Syntax**	**PIN required**	**Settings saved**	**Can be aborted**	**Response time**	**Error reference**
	full	Yes	No	Yes	Up to 3 min	+CME Error

9.4.1 Description

Sets a new password for the facility lock function defined by the +CLCK AT command. The command is abortable if a character is sent to the DCE during the command execution.

9.4.2 Syntax

Type	Syntax	Response	Example
Set	AT+CPWD=<fac>,<oldpwd>,<newpwd>	OK	AT+CPWD="SC","0933","0934" OK
Test	AT+CPWD=?	+CPWD: list of available (<fac>,<pwdlength>s) OK	+CPWD: ("SC",8),("P2",8),("AO",4),("OI",4),("OX",4),("AI",4),("IR",4),("AB",4),("AG",4),("AC",4) OK

9.4.3 Defined values

Parameter	Type	Description
<fac>	String	"P2" SIM PIN2; see the +CLCK command description for other values
<oldpwd>	String	Old password
<newpwd>	String	New password
<pwdlength>	Number	Length of password (digits)

9.4.4 Notes

- If the PIN is blocked, an error result code will be provided when attempting to change the PIN code if the PIN check is disabled through AT+CLCK command.

TOBY-L210-62S

- <fac>="AO", "OI", "OX", "AI", "IR" are not supported if the VoLTE service is not available (see +CIREG AT command).

TOBY-L210-60S

- <fac>="AO", "OI", "OX", "AI", "IR", "AB", "AG", "AC" and "NS" are not supported.

TOBY-L4 / LARA-R2 / TOBY-R2 / SARA-U2 / LISA-U2 / LISA-U1 / SARA-G3 / LEON-G1

- The PIN insertion is not mandatory before the command execution.

9.5 Custom SIM lock +USIMLCK

+USIMLCK						
Modules	SARA-U2 LISA-U2 LISA-U1					
	SARA-G4 SARA-G3 LEON-G1					
Attributes	**Syntax**	**PIN required**	**Settings saved**	**Can be aborted**	**Response time**	**Error reference**
	full	No	No	No	-	+CME Error

9.5.1 Description

Allows locking the module to work only with user-defined sets of SIM cards (e.g. a subset of networks, with a specified SIM card). According to the 3GPP TS 22.022 [31] there are different kinds of lock as follows:

- Network

- Network Subset
- SIM
- Service Provider (not supported)
- Corporate (not supported)

The module is locked according to user needs even if the SIM card is not inserted or the PIN code is not provided. At most 10 personalizations can be simultaneously configured.

9.5.2 Syntax

Type	Syntax	Response	Example
Set	AT+USIMLCK=<facility>,<pers_data>,<pwd>,<status>	OK	AT+USIMLCK="PN","222.01", "12345678",1 OK
Test	AT+USIMLCK=?	+USIMLCK: (list of supported <facility>s),,,(list of supported <status>) OK	+USIMLCK: ("PN","PU","PS"),,,(0-1) OK

9.5.3 Defined values

Parameter	Type	Description
<facility>	String	Personalization type, which can be: • "PN" Network personalization • "PU" Networks subset personalization • "PS" SIM/USIM personalization
<pers_data>	String	Data for device personalization. The contents depend on the selected <facility>. • If <facility> is "PN": <pers_data> is in the format: "MCC1.MNC1min[-MNC2max][,MCC2.MNC2min[-MNC2max]... [,MCC10.MNC10min[-MNC10max]]" It contains a list of comma-separated pairs of MCCs and MNC ranges • If <facility> is "PU": <pers_data> is in the format: "MCC1.MNC1min[-MNC2max][,MCC2.MNC2min[-MNC2max]... [,MCC10.MNC10min[-MNC10max]]:MSIN1[,MSIN2...[,MSIN10]]" It contains a list of comma-separated pairs of MCCs+MNC ranges as above; a list of comma-separated MSIN(s) or ranges of MSINs is appended after the MCC/MNC range using a ':' as separator. MSINs can be written with wildcards ('*') with the syntax: [*[*]]D1[D2[...]] (one wildcard for each MSIN digit to skip) followed by one or more digits. It is possible to use ranges of MSIN digits; in this case the minimum and maximum values should have the same number of wildcard and the same number of digits. In addition it is possible to concatenate more MSIN ranges with the comma separator (example: "123.456:56,**70-**72"). In this case all ranges must create a non empty set since MSIN comma separator behavior is an AND operator: an empty set means that any SIM is accepted • If <facility> is "PS": <pers_data> contains a list of at most 10 IMSIs; the format of the string is: "IMSI1:IMSI2:...:IMSIn" ☞ LISA-U200-00S / SARA-G3 / LEON-G1 • If <facility> is "PN": <pers_data> contains at most 10 pairs of MCC and MNC in the following format: "MCC.MNC" separated by colon: "MCC1.MNC1:MCC2.MNC2:...:MCCn.MNCn" • If <facility> is "PU":

Parameter	Type	Description
		<pers_data> contains MCC + MNC + a list of at most 10 pairs of the digits 6 and 7 of IMSI; the format of the string is: "MCC.MNC:DD1:DD2:...:DDn" where DDx represent the sixth and seventh digits of IMSI • If <facility> is "PS": <pers_data> contains a list of at most 10 IMSIs; the format of the string is: "IMSI1:IMSI2:...:IMSIn"
<pwd>	String	Password to enable/disable the personalization. The password length goes from 6 to 16 digits.
<status>	Number	• 0: feature set but disabled • 1: feature set and enabled

9.5.4 Notes

- The current personalization status can be queried using the AT+CLCK command with the proper facilities <fac> and the query status mode <mode>=2.
- At the end of command execution, the module is deregistered from network, reset and rebooted.
- A maximum of 5 attempts are allowed if a wrong password is inserted during an unlock operation with +CLCK command; after that, further unlock operations are blocked. The ME can still be used with the right SIM.
- The following error result codes could be provided:

Verbose string	Numeric code	Meaning
+CME ERROR: invalid characters in text string	25	An error is present in the <pers_data> format
+CME ERROR: operation not allowed	3	The user attempted the module personalization with an already active facility. An unlock operation must be performed before. Alternatively, an internal driver error occurred
+CME ERROR: incorrect password	16	The password format or length is wrong

- If the SIM lock is disabled it is possible to enable the lock with AT+CLCK command providing needed parameters (<fac>, <mode>=1 and the password); otherwise the same personalization type can be modified at any time by means of AT+USIMLCK command.
- If the SIM lock is enabled the same personalization can be modified only if before it has been disabled through AT+CLCK command.

10 Phonebook

10.1 Select phonebook memory storage +CPBS

+CPBS						
Modules	TOBY-L4 TOBY-L2 MPCI-L2					
	LARA-R2 TOBY-R2					
	SARA-U2 LISA-U2 LISA-U1					
	SARA-G4 SARA-G340 SARA-G350 SARA-G350-53S LEON-G1					
Attributes	**Syntax**	**PIN required**	**Settings saved**	**Can be aborted**	**Response time**	**Error reference**
	partial	Yes	No	No	< 35 s	+CME Error

10.1.1 Description

Selects a phonebook memory storage for further use in phonebook related commands.

☞ The information text response of the test command depends on SIM dependent parameters (e.g. "EC").

10.1.2 Syntax

Type	Syntax	Response	Example
Set	AT+CPBS=<storage>[,<password>]	OK	AT+CPBS="SM" OK
Read	AT+CPBS?	+CPBS: <storage>[,<used>,<total>] OK	+CPBS: "SM",25,150 OK
Test	AT+CPBS=?	+CPBS: (list of supported <storages>s) OK	+CPBS: ("SM","FD","LD","SN","EC", "ON","BL") OK

10.1.3 Defined values

Parameter	Type	Description
<storage>	String	Phonebook memory storage; the following values are allowed: • "SM": SIM phonebook (depending on SIM card, it may not be available when the FDN is enabled) • "AP": USIM application phonebook (depending on SIM card, it may not be available when the FDN is enabled) • "FD": SIM fixed dialling phonebook (only valid with PIN2) • "LD": SIM last-dialling phonebook • "BN": SIM barred-dialling-number phonebook (only valid with PIN2) • "SN": SIM service-dialling-number phonebook (read only) • "EC": SIM emergency-call-codes phonebook (read only) • "ON": Own number phone-book (read/write); the content is also shown by +CNUM • "BL": Blacklist phonebook (delete only) • "EN": SIM/USIM (or MT) emergency number
<password>	String	PIN2-code required when selecting PIN2-code locked <storage>s above (e.g. "FD"), if the PIN2 is applicable
<used>	Number	Indicates the number of used locations in selected memory
<total>	Number	Indicates the total number of locations in selected memory

10.1.4 Notes

- <storage>="SM" and <storage>="AP" definitions from 3GPP TS 27.007 [2]:
  - "SM": SIM/UICC phonebook. In the currently selected card slot, if a SIM card is present or if a UICC with an active GSM application is present, the EF_{ADN} under $DF_{Telecom}$ is selected. If a UICC with an active USIM application is present, the global phonebook, $DF_{PHONEBOOK}$ under $DF_{Telecom}$ is selected.

- o "AP": selected application phonebook. In the currently selected card slot, if a UICC with an active USIM application is present, the application phonebook, $DF_{PHONEBOOK}$ under ADF_{USIM} is selected.

TOBY-L2 / MPCI-L2

- <storage>="BL", "EN" are not supported.
- The <password> parameter is required only for updating the PIN2-code <storage>s (see the +CPBW AT command) not for reading them (see the +CPBR or +CPBF AT commands).

LARA-R2 / TOBY-R2

- <storage>="EC" is not supported.

LARA-R202 / LARA-R203 / LARA-R220 / LARA-R280

- <storage>="BL" is not supported.

SARA-U2 / LISA-U2 / LISA-U1 / SARA-G3 / LEON-G1

- <storage>="EN" is not supported.

SARA-G4

- <storage>="BN", "EN", "SN", "AP" are not supported.

10.2 Read phonebook entries +CPBR

+CPBR						
Modules	TOBY-L4 TOBY-L2 MPCI-L2					
	LARA-R2 TOBY-R2					
	SARA-U2 LISA-U2 LISA-U1					
	SARA-G4 SARA-G340 SARA-G350 SARA-G350-53S LEON-G1					
Attributes	**Syntax**	**PIN required**	**Settings saved**	**Can be aborted**	**Response time**	**Error reference**
	partial	Yes	No	No	< 35 s	+CME Error

10.2.1 Description

Returns phonebook entries in location number range <index1> ... <index2> from the current phonebook memory storage selected with +CPBS. If <index2> is left out, only location <index1> is returned. Entry fields returned are:

- location number <indexn>
- phone number stored there <number> of format <type>
- text <text> associated with the number
- <group> indicating a group the entry may belong to (if the selected phonebook supports it)
- <adnumber> an additional number (of format <adtype>) (if the selected phonebook supports it)
- <secondtext> a second text field associated with the number (if the selected phonebook supports it)
- <email> an email field (if the selected phonebook supports it)

No text lines are returned for empty (but available) locations.

☞ The wildcard character (?) in the phone number of FDN is allowed.

10.2.2 Syntax

Type	Syntax	Response	Example
Set	AT+CPBR=<index1>[,<index2>]	[+CPBR: <index1>,<number>,<type>,<text>[,<group>[,<adnumber>[,<adtype>[,<secondtext>[,<email>[,<sip_uri>[,<tel_uri>]]]]] [...] [+CPBR: <index2>,<number>,<type>,<text>[,<group>[,<adnumber>[,<adtype>[,<secondtext>[,<email>[,<sip_uri>[,<tel_uri>]]]]]]] OK	AT+CPBR=1,4 +CPBR: 1,"040123456",129,"RossiCarlo" +CPBR: 2,"040123457",129,"RossiMario" +CPBR: 4,"040123458",129,"RossiGiuseppe" OK

Type	Syntax	Response	Example
Test	AT+CPBR=?	+CPBR: (list of supported <index>s), <nlength>,<tlength>[,<glength>[,<alength>[,<slength>[,<elength>[,<siplength>[,<tellength>]]]]]] OK	+CPBR: (1-100),20,18 OK

10.2.3 Defined values

Parameter	Type	Description
<index1>, <index2>, <index>	Number	Range of location numbers of phonebook memory
<number>	String	Phone number of format <type>
<type>	Number	Type of address octet (see the 3GPP TS 24.008 [12] subclause 10.5.4.7)
<text>	String	Text associated with the phone number of maximum length <tlength>
<group>	String	Group the phonebook entry may belong to, of maximum length <glength>
<adnumber>	String	Additional phone number of format <adtype>
<adtype>	Number	Type of address octet (see the 3GPP TS 24.008 [12] subclause 10.5.4.7)
<secondtext>	String	Second text associated with the number, of maximum length <slength>
<email>	String	Email of maximum length <elength>
<sip_uri>	String	Field of maximum length <siplength>; character set as specified by the +CSCS AT command
<tel_uri>	String	Phone number of maximum length <tellength>; character set as specified by the +CSCS AT command
<nlength>	Number	Maximum length of field <number>
<tlength>	Number	Maximum length of field <text>
<glength>	Number	Maximum length of field <group>
<alength>	Number	Maximum length of field <adnumber>
<slength>	Number	Maximum length of field <secondtext>
<elength>	Number	Maximum length of field <email>
<siplength>	Number	Maximum length of field <sip_uri>
<tellength>	Number	Maximum length of field <tel_uri>

10.2.4 Notes

- The <sip_uri>, <tel_uri>, <siplength> and <tellength> parameters are not supported.

SARA-G4 / SARA-G340 / SARA-G350 / LEON-G1

- <group>, <adnumber>, <adtype>, <secondtext>, <email>, <glength>, <alength>, <slength>, <elength> are not supported.

10.3 Find phonebook entries +CPBF

+CPBF						
Modules	TOBY-L4 TOBY-L2 MPCI-L2					
	LARA-R2 TOBY-R2					
	SARA-U2 LISA-U2 LISA-U1					
	SARA-G4 SARA-G340 SARA-G350 SARA-G350-53S LEON-G1					
Attributes	**Syntax**	**PIN required**	**Settings saved**	**Can be aborted**	**Response time**	**Error reference**
	partial	Yes	No	No	< 35 s	+CME Error

10.3.1 Description

Returns the phonebook entries from the current phonebook memory storage (previously selected by +CPBS), whose alphanumeric field <text> starts with string <findtext>.

Entry fields returned are:

- location number <indexn>
- phone number stored there <number> of format <type>
- text <text> associated with the number

- <group> indicating a group the entry may belong to (if the selected phonebook supports it)
- <hidden> indicating if the entry is hidden (if the selected phonebook supports hidden entries)
- <adnumber> an additional number (of format <adtype>) (if the selected phonebook supports it)
- <secondtext> a second text field associated with the number (if the selected phonebook supports it)
- <email> an email field (if the selected phonebook supports it)

☞ The string <findtext> is case sensitive.

10.3.2 Syntax

Type	Syntax	Response	Example
Set	AT+CPBF=<findtext>	[+CPBF: <index1>,<number>,<type>,<text>[,<hidden>][,<group>[,<adnumber>[,<adtype>[,<secondtext>[,<email>[,<sip_uri>[,<tel_uri>]]]]]]] [...] [+CPBF: <index2>,<number>,<type>,<text>[,<hidden>][,<group>[,<adnumber>[,<adtype>[,<secondtext>[,<email>[,<sip_uri>[,<tel_uri>]]]]]]]] OK	AT+CPBF="u-blox" OK
Test	AT+CPBF=?	+CPBF: [<nlength>],[<tlength>][,<glength>[,<alength>[,<slength>[,<elength>[,<siplength>[,<tellength>]]]]]] OK	+CPBF: 40,18 OK

10.3.3 Defined values

Parameter	Type	Description
<index1>, <index2>, <index>	Number	Location numbers of phonebook memory
<number>	String	Phone number of format <type>
<type>	Number	Type of address octet (see the 3GPP TS 24.008 [12] subclause 10.5.4.7)
<findtext>,<text>	String	Maximum length <tlength>
<group>	String	Group the phonebook entry may belong to, of maximum length <glength>
<hidden>	Number	Indicates if the entry is hidden or not: • 0 (default value): phonebook entry not hidden • 1: phonebook entry hidden
<adnumber>	String	Additional phone number of format <adtype>
<adtype>	Number	Type of address octet (see the 3GPP TS 24.008 [12] subclause 10.5.4.7)
<secondtext>	String	Second text associated with the number, of maximum length <slength>
<email>	String	Email of maximum length <elength>
<sip_uri>	String	Field of maximum length <siplength>; character set as specified by the +CSCS AT command
<tel_uri>	String	Phone number of maximum length <tellength>; character set as specified by the +CSCS AT command
<nlength>	Number	Maximum length of field <number>
<tlength>	Number	Maximum length of field <text>
<glength>	Number	Maximum length of field <group>
<alength>	Number	Maximum length of field <adnumber>
<slength>	Number	Maximum length of field <secondtext>
<elength>	Number	Maximum length of field <email>
<siplength>	Number	Maximum length of field <sip_uri>
<tellength>	Number	Maximum length of field <tel_uri>

10.3.4 Notes

- The <sip_uri>, <tel_uri>, <siplength> and <tellength> parameters are not supported.
- The <hidden> parameter is not applicable, since "AP" phonebook is not supported by +CPBS command (see the 3GPP TS 27.007 [2]).

SARA-G4 / SARA-G340 / SARA-G350 / LEON-G1

- <group>, <adnumber>, <adtype>, <secondtext>, <email>, <glength>, <alength>, <slength>, <elength> are not supported.

10.4 Write phonebook entry +CPBW

+CPBW						
Modules	TOBY-L4 TOBY-L2 MPCI-L2					
	LARA-R2 TOBY-R2					
	SARA-U2 LISA-U2 LISA-U1					
	SARA-G4 SARA-G340 SARA-G350 SARA-G350-53S LEON-G1					
Attributes	**Syntax**	**PIN required**	**Settings saved**	**Can be aborted**	**Response time**	**Error reference**
	partial	Yes	No	No	< 35 s	+CME Error

10.4.1 Description

Stores the phonebook entry in the current phonebook memory storage (selectable with +CPBS) at the location specified by the <index> field. Other entry fields are:

- the phone number <number> (in the <type> format)
- <text> text associated with the number
- <group> indicating a group the entry may belong to
- <adnumber> an additional number (of format <adtype>)
- <secondtext> a second text field associated with the number
- <email> an email field

If all the fields are omitted, except for <index>, the corresponding phonebook entry is deleted. If the <index> field is left out, but the <number> is given, the entry is written in the first free location in the current phonebook memory storage.

If no phonebook entries are available the information text response of the test command will be +CPBW: 0 <CR><LF>OK

☞ The (?) wildcard character in the phone number is allowed in the FD phonebook only.

☞ <group>, <adnumber>, <adtype>, <secondtext>, <email> parameters are not supported by 2G SIM; but they could be supported by USIM. Not all the fields are always supported on the used USIM: to verify which fields are supported see the test command.

☞ When BL (blacklist) phonebook is selected, only <index>=0 is accepted.

☞ The set command +CPBW is not applicable for the storages "SN", "EC" (read only storages), while it is applicable to "LD" storage only to delete an item.

10.4.2 Syntax

Type	Syntax	Response	Example
Set	AT+CPBW=[<index>][,<number>[,<type>[,<text>[,<group>[,<adnumber>[,<adtype>[,<secondtext>[,<email>[,<sip_uri>[,<tel_uri>[,<hidden>]]]]]]]]]]	[+CPBW: <written_index>] OK	AT+CPBW=5,"091137880",,"u-blox" OK AT+CPBW=,"091137880",,"u-blox" +CPBW: 5 OK
Read	AT+CPBW?	+CPBW: <written_index> OK	+CPBW: 1 OK
Test	AT+CPBW=?	+CPBW: (list of supported <index>s),<nlength>,(list of	+CPBW: (1-250),40,(129,145),18 OK

Type	Syntax	Response	Example
		supported <type>s),<tlength>[,<glength>[,<alength>[,<slength>[,<elength>[,<siplength>[,<tellength>]]]]]] OK	
		+CPBW: 0 OK	+CPBW: 0 OK

10.4.3 Defined values

Parameter	Type	Description
<index>	Number	Location numbers of phonebook memory
<number>	String	Phone number of format <type>
<type>	Number	Type of address; default is 145 when dialling string includes '+', otherwise 129
<text>	String	Text associated with the number. The maximum length is <tlength>
<group>	String	Group the phonebook entry may belong to, of maximum length <glength>
<adnumber>	String	Additional phone number of format <adtype>
<adtype>	Number	Type of address; default is 145 when dialling string includes '+', otherwise 129
<secondtext>	String	Second text associated with the number, of maximum length <slength>
<email>	String	Email of maximum length <elength>
<hidden>	Number	Indicates if the entry is hidden or not: • 0 (default value): phonebook entry not hidden • 1: phonebook entry hidden
<sip_uri>	String	Field of maximum length <siplength>; character set as specified by the +CSCS AT command
<tel_uri>	String	Phone number of maximum length <tellength>; character set as specified by the +CSCS AT command
<nlength>	Number	Maximum length of field <number>
<tlength>	Number	Maximum length of field <text>
<glength>	Number	Maximum length of field <group>
<alength>	Number	Maximum length of field <adnumber>
<slength>	Number	Maximum length of field <secondtext>
<elength>	Number	Maximum length of field <email>
<siplength>	Number	Maximum length of field <sip_uri>
<tellength>	Number	Maximum length of field <tel_uri>
<written_index>	Number	Last location number <index> of the written phonebook entry

10.4.4 Notes

- The <sip_uri>, <tel_uri>, <siplength> and <tellength> parameters are not supported.
- The <hidden> parameter is not applicable, since "AP" phonebook is not supported by +CPBS command (see the 3GPP TS 27.007 [2]).

TOBY-L2 / MPCI-L2

- The <group> parameter is not saved in SIM.

TOBY-L200-00S / TOBY-L201 / TOBY-L210-00S / TOBY-L210-60S / MPCI-L200-00S / MPCI-L201 / MPCI-L210-00S / MPCI-L210-60S

- An error result code is returned when trying to delete an empty entry.

SARA-U2 / LISA-U2 / LISA-U1

- <written_index> is not supported; hence the information text response to the set command is empty (only the final result code is provided).
- The read command is not supported.

SARA-G4 / SARA-G340 / SARA-G350 / LEON-G1

- <group>, <adnumber>, <adtype>, <secondtext>, <email>, <glength>, <alength>, <slength>, <elength> are not supported.

- <written_index> is not supported; hence the information text response to the set command is empty (only the final result code is provided).
- The read command is not supported.

10.5 Read/rename phonebook group +UPBGR

+UPBGR						
Modules	SARA-U270-73S					
Attributes	**Syntax**	**PIN required**	**Settings saved**	**Can be aborted**	**Response time**	**Error reference**
	full	Yes	No	No	-	+CME Error

10.5.1 Description

Reads the phonebook group name at the given location number <index> of EF_{GAS}.

Otherwise, if new name for <newgroup> group is provided, the command renames the phonebook group at the location specified by <index> of EF_{GAS}.

☞ The +UPBGR command (set and test) is not allowed for 2G SIM and is allowed for USIM only if EF_{GAS} and EF_{GRP} are present in the inserted USIM (see the 3GPP TS 31.102 [19]) for current phonebook memory storage (previously selected by +CPBS).

10.5.2 Syntax

Type	Syntax	Response	Example
Read group name command			
Set	AT+UPBGR=<index>	+UPBGR: <index>,<group> OK	AT+UPBGR=1 +UPBGR: 1,"group1name" OK
Rename group command			
Set	AT+UPBGR=<index>,<newgroup>	OK	AT+UPBGR=1,"newgroup1name" OK
Test	AT+UPBGR=?	+UPBGR: (list of supported <index>'s),<glength> OK or +CME ERROR: <error>	AT+UPBGR=? +UPBGR: (1-6),24 OK

10.5.3 Defined values

Parameter	Type	Description
<index>	Number	Location identifier for group name in EF_{GAS}
<group>, <newgroup>	String	Phonebook group name of maximum length <glength>
<glength>	Number	Maximum length of field <group>, <newgroup>

11 Short Messages Service

11.1 Introduction

For a complete overview of SMS, see 3GPP TS 23.040 [8] and 3GPP TS 27.005 [16].

In case of errors all the SMS related AT commands return an error result code as defined in Appendix A.2.

11.1.1 Class 0 SMS

The storing of a class 0 SMS depends on the module series:

- TOBY-L4 / TOBY-L200-02S / TOBY-L200-03A / TOBY-L200-03S / TOBY-L210-02S / TOBY-L210-03A / TOBY-L210-03S / TOBY-L210-62S / TOBY-L220 / TOBY-L280 / MPCI-L200-02S / MPCI-L200-03S / MPCI-L210-02S / MPCI-L210-03S / MPCI-L220 / MPCI-L280 / LARA-R2 / TOBY-R2 - all incoming SMSes stored in <mem3> (preferred memory for storing the received SMS, see +CPMS) with increasing index.
- TOBY-L200-00S / TOBY-L201 / TOBY-L210-00S / TOBY-L210-60S / MPCI-L200-00S / MPCI-L201 / MPCI-L210-00S / MPCI-L210-60S - not stored.
- SARA-U2 / LISA-U2 / LISA-U1 / SARA-G4 / SARA-G3 / LEON-G1 - only one incoming SMS stored in RAM (the last received SMS, <index> parameter value 0).

11.1.2 <index> parameter range

The <index> parameter range depends on the memory storage type:

ME (ME message), **SM** ((U)SIM message) **MT** (ME + SM):

- TOBY-L4
  - Values between 1 and 4: SMS stored in ME.
  - Values between 1 and n: SMS stored in SIM (n depends on SIM card used).
- TOBY-L200-02S / TOBY-L200-03A / TOBY-L200-03S / TOBY-L210-02S / TOBY-L210-03A / TOBY-L210-03S / TOBY-L210-62S / TOBY-L220 / TOBY-L280 / MPCI-L200-02S / MPCI-L200-03S / MPCI-L210-02S / MPCI-L210-03S / MPCI-L220 / MPCI-L280 / SARA-U2 / LISA-U2 / LISA-U1 / SARA-G4 / SARA-G340 / SARA-G350 / LEON-G1
  - Values between 1 and 300: SMS stored in ME.
  - Values between 301 and (301 + (n-1)): SMS stored in SIM (n depends on SIM card used).
- TOBY-L200-00S / TOBY-L201 / TOBY-L210-00S / TOBY-L210-60S / MPCI-L200-00S / MPCI-L201 / MPCI-L210-00S / MPCI-L210-60S / SARA-G300 / SARA-G310 - values between 1 and n (n depends on SIM card used).
- LARA-R2 / TOBY-R2
  - Values between 1 and 100: SMS stored in ME.
  - Values between 1 and n: SMS stored in SIM (n depends on SIM card used).

BM (Broadcast Message):

- TOBY-L4 - Values between 1 and 4.
- TOBY-L200-02S / TOBY-L200-03A / TOBY-L200-03S / TOBY-L210-02S / TOBY-L210-03A / TOBY-L210-03S / TOBY-L210-62S / TOBY-L220 / TOBY-L280 / MPCI-L200-02S / MPCI-L200-03S / MPCI-L210-02S / MPCI-L210-03S / MPCI-L220 / MPCI-L280 / SARA-U2 / LISA-U2 / LISA-U1 - values between 1 and 300: Cell Broadcast messages are stored only if there is at least an empty location available in the BM memory (that is located in the file system).
- TOBY-L200-00S / TOBY-L201 / TOBY-L210-00S / TOBY-L210-60S / MPCI-L200-00S / MPCI-L201 / MPCI-L210-00S / MPCI-L210-60S - not stored.
- LARA-R2 / TOBY-R2 - Values between 1 and 10.
- SARA-G4 / SARA-G3 / LEON-G1 series - values between 1 and 5: Cell Broadcast messages are stored using a circular buffer so they are always saved even if the BM memory (that is located in RAM) is full. Since the Cell Broadcast messages are stored in RAM, they will be lost after a power-off or reset of the module.

SR (Status Report)

- TOBY-L4 - Values between 1 and 4.

- TOBY-L200-02S / TOBY-L200-03A / TOBY-L200-03S / TOBY-L210-02S / TOBY-L210-03A / TOBY-L210-03S / TOBY-L210-62S / TOBY-L220 / TOBY-L280 / MPCI-L200-02S / MPCI-L200-03S / MPCI-L210-02S / MPCI-L210-03S / MPCI-L220 / MPCI-L280 / SARA-U2 / LISA-U2 / LISA-U1 - values between 1 and 300: Status Report messages are stored only if there is at least an empty location available in the SR memory (that is located in the file system).
- TOBY-L200-00S / TOBY-L201 / TOBY-L210-00S / TOBY-L210-60S / MPCI-L200-00S / MPCI-L201 / MPCI-L210-00S / MPCI-L210-60S / SARA-G4 / SARA-G3 / LEON-G1 - not stored.
- LARA-R2 / TOBY-R2 - Values between 1 and 10.

11.1.3 Limitations

The following limitations apply related to the SMS usage:

Single SMS

- 160 characters if <dcs>= "GSM 7 bit default alphabet data"
- 140 octets if <dcs>= "8-bit data"
- 70 UCS2 characters (2 bytes for each one) if <dcs>="16-bit uncompressed UCS2 data"

Concatenated SMS (where supported) - "8-bit reference number" type

- 153 characters if <dcs>= "GSM 7 bit default alphabet data"
- 134 octets if <dcs>= "8-bit data"
- 67 UCS2 characters (2 bytes for each one) if <dcs>="16-bit uncompressed UCS2 data"

Concatenated SMS (where supported) - "16-bit reference number" type

- The limits are the same as the "8-bit reference number" type, but are decreased by one unit.

A concatenated SMS can have as many as 255 parts.

☞ TOBY-L4906-50A
The SMSes on ME memory are not saved in the NVM.

☞ Concatenated MO SMS are supported by the following products:
- TOBY-L201/MPCI-L201 only when the module is configured in Verizon mode by means of the +UMNOCONF AT command (<MNO>=3)
- TOBY-L220/MPCI-L220

11.2 Select message service +CSMS

+CSMS						
Modules	All products					
Attributes	**Syntax**	**PIN required**	**Settings saved**	**Can be aborted**	**Response time**	**Error reference**
	full	Yes	No	No	-	+CMS Error

11.2.1 Description

Selects the <service> message service. It returns the types of messages supported by the MT.

11.2.2 Syntax

Type	Syntax	Response	Example
Set	AT+CSMS=<service>	+CSMS: <mt>,<mo>,<bm> OK	AT+CSMS=1 +CSMS: 1,1,1 OK
Read	AT+CSMS?	+CSMS: <service>,<mt>,<mo>,<bm> OK	+CSMS: 0,1,1,1 OK
Test	AT+CSMS=?	+CSMS: (list of supported <service>s) OK	+CSMS: (0-1) OK

11.2.3 Defined values

Parameter	Type	Description
<service>	Number	• 0: see 3GPP TS 23.040 [8] and 3GPP TS 23.041 [9]; syntax of AT commands is compatible with 3GPP TS 27.005 [16] phase 2; phase 2+ features may be supported if no new command syntax is required • 1: see 3GPP TS 23.040 [8] and 3GPP TS 23.041 [9]; syntax of AT commands is compatible with 3GPP TS 27.005 [16] phase 2+
<mt>	Number	Mobile terminated messages: • 0: not supported • 1: supported
<mo>	Number	Mobile originated messages: • 0: not supported • 1: supported
<bm>	Number	Broadcast messages: • 0: not supported • 1: supported

11.2.4 Notes

TOBY-L4 / TOBY-L2 / MPCI-L2 / LARA-R2 / TOBY-R2 / SARA-U2 / LISA-U2 / LISA-U1 / SARA-G4 / SARA-G3 / LEON-G1

- Set <service> to 1 to acknowledge an incoming message (either SMS or Status Report) with +CNMA AT command.
- If <service> is changed from 1 to 0 and one or more parameters of the +CNMI command are in phase 2+, switch the +CNMI parameters to phase 2 specific values before entering phase 2.

11.3 Preferred message storage +CPMS

+CPMS						
Modules	All products					
Attributes	**Syntax**	**PIN required**	**Settings saved**	**Can be aborted**	**Response time**	**Error reference**
	partial	Yes	NVM	No	Up to 3 min	+CMS Error

11.3.1 Description

Selects memory storages <mem1>, <mem2> and <mem3>. If the chosen storage is supported by the MT but not suitable, the +CMS ERROR: <err> error result code should be returned.

☞ See the test command for the supported memory types for each memory storage.

11.3.2 Syntax

Type	Syntax	Response	Example
Set	AT+CPMS=<mem1>[,<mem2>[,<mem3>]]	AT+CPMS: <used1>,<total1>,<used2>,<total2>,<used3>,<total3> OK	AT+CPMS="BM","SM","SM" +CPMS: 0,5,0,50,0,50 OK
Read	AT+CPMS?	+CPMS: <mem1>,<used1>,<total1>,<mem2>,<used2>,<total2>,<mem3>,<used3>,<total3> OK	+CPMS: "MT",4,350,"MT",4,350,"MT",4,350 OK
Test	AT+CPMS=?	+CPMS: (list of supported <mem1>s),(list of supported <mem2>s),(list of supported <mem3>s) OK	+CPMS: ("MT","ME","SM","BM","SR"),("MT","ME","SM"),("MT","ME","SM") OK

11.3.3 Defined values

Parameter	Type	Description
<mem1>	String	Memory used to read and delete messages. The supported values may vary: • "ME": ME message storage • "SM": (U)SIM message storage • "MT" (factory-programmed value): "ME"+"SM", "ME" preferred • "BM": Broadcast Message storage • "SR": Status Report storage The default value is the currently set value.
<mem2>	String	Memory used to write and send SMS. The supported values may vary: • "ME": ME message storage • "SM": (U)SIM message storage • "MT" (factory-programmed value): "ME"+"SM", "ME" preferred The default value is the currently set value.
<mem3>	String	Memory preferred to store the received SMS. The supported values may vary: • "ME": ME message storage • "SM": (U)SIM message storage • "MT" (factory-programmed value): "ME"+"SM", "ME" preferred The default value is the currently set value.
<used1>	Number	Number of used message locations in <mem1>
<total1>	Number	Total number of message locations in <mem1>
<used2>	Number	Number of used message locations in <mem2>
<total2>	Number	Total number of message locations in <mem2>
<used3>	Number	Number of used message locations in <mem3>
<total3>	Number	Total number of message locations in <mem3>

11.3.4 Notes

TOBY-L4

- "MT" message storage is not supported.
- The factory-programmed value is "SM", "SM" and "SM".
- The parameter setting is not saved in the NVM.

TOBY-L200-00S / TOBY-L201 / TOBY-L210-00S / TOBY-L210-60S / MPCI-L200-00S / MPCI-L201 / MPCI-L210-00S / MPCI-L210-60S

- Only "SM" message storage is supported.
- The factory-programmed value is "SM", "SM" and "SM".

LARA-R2 / TOBY-R2

- "MT" message storage is not supported.
- The factory-programmed value is "ME", "ME" and "ME".

SARA-G4 / SARA-G3

- <mem1> = "SR" (Status Report storage) is not supported.

SARA-G300 / SARA-G310

- "ME" and "MT" message storages are not supported.
- The factory-programmed value is "SM", "SM" and "SM" .

LEON-G1

- <mem1> = "SR" (Status Report storage) is not supported.

11.4 Preferred message format +CMGF

+CMGF						
Modules	All products					
Attributes	**Syntax**	**PIN required**	**Settings saved**	**Can be aborted**	**Response time**	**Error reference**
	full	Yes	Profile	No	-	+CMS Error

11.4.1 Description

Indicates to the MT which input and output format of messages shall be used.

11.4.2 Syntax

Type	Syntax	Response	Example
Set	AT+CMGF=[<mode>]	OK	AT+CMGF=1 OK
Read	AT+CMGF?	+CMGF: <mode> OK	+CMGF: 1 OK
Test	AT+CMGF=?	+CMGF: (list of supported <mode>s) OK	+CMGF: (0-1) OK

11.4.3 Defined values

Parameter	Type	Description
<mode>	Number	Indicates the format of messages used with send, list, read and write commands and URCs resulting from receiving SMSes messages: • 0 (default and factory-programmed value): PDU mode • 1: text mode

11.4.4 Notes

TOBY-L201 / MPCI-L201

- The default value is 1 when the module is configured in Verizon mode (+UMNOCONF=3).

11.5 Save settings +CSAS

+CSAS						
Modules	All products					
Attributes	**Syntax**	**PIN required**	**Settings saved**	**Can be aborted**	**Response time**	**Error reference**
	full	No	NVM	No	-	+CMS Error

11.5.1 Description

Saves active message service settings from the current active memory (RAM) to non-volatile memory (NVM). The settings related to the +CSCA (the current SMSC address stored in RAM), +CSMP and +CSCB commands are stored in a specific SMS profile (only one profile is available).

11.5.2 Syntax

Type	Syntax	Response	Example
Set	AT+CSAS[=<profile>]	OK	AT+CSAS OK
Test	AT+CSAS=?	+CSAS: (list of supported <profile>s) OK	+CSAS: (0) OK

11.5.3 Defined values

Parameter	Type	Description
<profile>	Number	Specific SMS profile index where to store the active message settings. The factory-programmed value is 0.

11.6 Restore settings +CRES

+CRES						
Modules	All products					
Attributes	**Syntax**	**PIN required**	**Settings saved**	**Can be aborted**	**Response time**	**Error reference**
	full	Yes	No	No	< 10 s	+CMS Error

11.6.1 Description

Restores message service settings from a non-volatile memory (NVM) to the current active memory (RAM). The settings related to the +CSCA (the SMSC address in the SIM card is also updated), +CSMP and +CSCB commands are read from a specific SMS profile (only one profile is available).

11.6.2 Syntax

Type	Syntax	Response	Example
Set	AT+CRES[=<profile>]	OK	AT+CRES=0 OK
Test	AT+CRES=?	+CRES: (list of supported <profile>s) OK	+CRES: (0) OK

11.6.3 Defined values

Parameter	Type	Description
<profile>	Number	Specific SMS profile index from where to read the message service settings

11.7 Show text mode parameters +CSDH

+CSDH						
Modules	All products					
Attributes	**Syntax**	**PIN required**	**Settings saved**	**Can be aborted**	**Response time**	**Error reference**
	full	Yes	No	No	-	+CMS Error

11.7.1 Description

Controls whether detailed SMS header information is shown in text mode (see the +CMGF=1 command description).

This affects the responses of the +CMGR, +CMGL, +CSMP, +CSCA AT commands and the +CMT, +CMTI, +CDS, +CDSI, +CBM, +CBMI (see +CNMI) URCs.

11.7.2 Syntax

Type	Syntax	Response	Example
Set	AT+CSDH=[<show>]	OK	AT+CSDH=1 OK
Read	AT+CSDH?	+CSDH: <show> OK	+CSDH: 0 OK
Test	AT+CSDH=?	+CSDH: (list of supported <show>s) OK	+CSDH: (0-1) OK

11.7.3 Defined values

Parameter	Type	Description
<show>	Number	• 0 (default and factory-programmed value): do not show detailed SMS header information • 1: show detailed SMS header information

11.8 New message indication +CNMI

+CNMI						
Modules	All products					
Attributes	**Syntax**	**PIN required**	**Settings saved**	**Can be aborted**	**Response time**	**Error reference**
	partial	Yes	Profile	No	-	+CMS Error

11.8.1 Description

Selects the procedure to indicate the reception of a new SMS in case of the MT is active (the DTR signal is ON). If the MT is inactive (the DTR signal is OFF), the message reception should be done as specified in 3GPP TS 23.038 [7].

☞ SARA-U2 / LISA-U2 / LISA-U1 / SARA-G4 / SARA-G3 / LEON-G1
The SMSes of class 0 (normally displayed via MMI) are indicated on DTE via URC **+CMTI: "SM",0** , wherein 0 represents an SMS without SIM-storage ("SM" indicates only that no other specific setting is needed to read the SMS via AT+CMGR=0).

☞ TOBY-L200-02S / TOBY-L200-03A / TOBY-L200-03S / TOBY-L210-02S / TOBY-L210-03A / TOBY-L210-03S / TOBY-L210-62S / TOBY-L220 / TOBY-L280 / MPCI-L200-02S / MPCI-L200-03S / MPCI-L210-02S / MPCI-L210-03S / MPCI-L220 / MPCI-L280 / LARA-R2 / TOBY-R2
The SMSes of class 0 (normally displayed via MMI) are indicated on DTE via URC +CMTI: <mem3>,<index> where <mem3> is the preferred memory for storing the received SMS and <index> is the first free storage position in <mem3>.

☞ TOBY-L4 / TOBY-L2 / MPCI-L2 / LARA-R2 / TOBY-R2 / SARA-U2 / LISA-U2 / LISA-U1 / SARA-G4 / SARA-G3 / LEON-G1
The <tooa>, <fo>, <pid>, <dcs>, <sca>, <tosca>, <length> parameters in the text mode +CMT URC are displayed only if +CSDH=1 is set.

The +UCMT URC notifies the SMS-DELIVER status for 3GPP2 Mobile Terminated SMSes; it is equivalent to +CMT but valid only for 3GPP2 SMS (i.e. 3GPP2 SMS over IMS received on Verizon MNO).

11.8.2 Syntax

Type	Syntax	Response	Example
Set	AT+CNMI=[<mode>[,<mt>[,<bm>[,<ds>[,<bfr>]]]]]	OK	AT+CNMI=1,1 OK
Read	AT+CNMI?	+CNMI: <mode>,<mt>,<bm>,<ds>,<bfr> OK	+CNMI: 0,0,0,0,0 OK
Test	AT+CNMI=?	+CNMI: (list of supported <mode>s),(list of supported <mt>s),(list of supported <bm>s),(list of supported <ds>s),(list of supported <bfr>s) OK	+CNMI: (0-2),(0-3),(0-3),(0-2),(0-1) OK
URC		+CMTI: <mem>,<index>	+CMTI: "SM",5
URC		**Text mode (+CMGF=1):** +CMT: <oa>,[<alpha>],<scts>[,<tooa>,<fo>,<pid>,<dcs>,<sca>,<tosca>,<length>]<CR><LF><data>	+CMT: "+393475234652",,"14/11/21,11:58:23+01" Hello world
		PDU mode (+CMGF=0): +CMT: ,<length><CR><LF><pdu>	

Type	Syntax	Response	Example
URC		**Text mode (+CMGF=1):** +UCMT: <message_id>,<oa>,<scts>,[<priority>],[<privacy>],[<callback_number>],<encoding>,[<status>],[<num_sms>,<part>,<reference>],<length><CR><LF><text>	+UCMT: 1,+1231241241,"18:02:28+08",,,,2,,,,,6 Hello!
		PDU mode (+CMGF=0): +UCMT: <pdu_length><CR><LF><pdu>	
URC		+CBMI: <mem>,<index>	+CBMI: "BM",48
URC		**Text mode (+CMGF=1):** +CBM: <sn>,<mid>,<dcs>,<page>,<pages><CR><LF><data>	+CBM: 271,1025,1,1,1 The quick brown fox jumps over the lazy dog 0123456789
		PDU mode (+CMGF=0): +CBM: <length><CR><LF><pdu>	
URC		+CDSI: <mem>,<index>	+CDSI: "MT",2
URC		**Text mode (+CMGF=1):** +CDS: <fo>,<mr>,[<ra>],[<tora>],<scts>,<dt>,<st>	+CDS: 6,202,"+393492323583",145,"14/07/25,13:07:16+02","14/07/25,16:35:44+02",0
		PDU mode (+CMGF=0): +CDS: <length><CR><LF><pdu>	

11.8.3 Defined values

Parameter	Type	Description
<mode>	Number	Controls the processing of URCs specified within this command: • 0 (default value): buffer URCs in the MT; if the MT buffer is full, the oldest indication may be discarded and replaced with the new received indications (ring buffer) • 1 (factory-programmed value): discard indication and reject new received message URCs when MT-DTE link is reserved; otherwise forward them directly to the DTE • 2: buffer URCs in the MT when the serial link is busy (e.g. data-transfer); otherwise forward them directly to the DTE • 3: forward URCs directly to the TE. TA-TE link specific inband technique used to embed result codes and data when MT is in on-line data mode
<mt>	Number	Specifies the rules for managing the received SMS according the message's Data Coding Scheme (DCS): • 0 (default and factory-programmed value): No SMS-DELIVER indications are routed to the TE • 1: if SMS-DELIVER is stored in the MT, indication of the memory location is routed to the DTE using the +CMTI URC • 2: SMS-DELIVER (except class 2 SMS) are routed directly to the DTE (but not saved in the module file system or SIM memory) using the +CMT URC. If MT has its own display device then class 0 SMS and SMS in the message waiting indication group (discard message) may be copied to both MT display and to DTE. In this case MT shall send the acknowledgement to the network. Class 2 SMSs and messages in the message waiting indication group (storage message) result in indication as defined in <mt>=1 • 3: Class 3 SMS-DELIVERs are routed directly to DTE using URCs defined in <mt>=2. Messages of other data coding schemes result in indication as defined in <mt>=1
<bm>	Number	Specifies the rules for managing the received Cell Broadcast messages (CBM): • 0 (default and factory-programmed value): no CBM indications to the DTE • 1: if the CBM is stored in the MT, an indication of the used memory location is routed to DTE using the +CBMI URC • 2: new CBMs are routed directly to the DTE using the +CBM URC • 3: class 3 CBMs are routed directly to DTE using URCs defined in <bm>=2. If CBM storage is supported, messages of other classes result in indication as defined in <bm>=1
<ds>	Number	Specifies the rules for managing the Status Report messages:

Parameter	Type	Description
		• 0 (default and factory-programmed value): no SMS-STATUS-REPORTs are routed to the DTE • 1: SMS-STATUS-REPORTs are routed to the DTE using the +CDS URC • 2: if SMS-STATUS-REPORT is stored in the MT, the indication of the memory location is routed to the DTE using the +CDSI URC
<bfr>	Number	Controls the buffering of URCs: • 0 (default and factory-programmed value): MT buffer of URCs defined within this command is flushed to the DTE when <mode> 1...3 is entered (OK final result code shall be given before flushing the codes). • 1: MT buffer of URCs defined within this command is cleared when <mode> 1...3 is entered
<mem>	String	Same as defined in +CPMS Defined Values
<index>	Number	Storage position
<length>	Number	Two meanings: • in text mode: number of characters • in PDU mode: PDU's length in octets without the Service Center's address. In example: 0391214301000381 66F6000004E374F80D: this is a PDU with Service Center's number +1234, that generates the address 03912143 (4 octets). Thus in this case <length>=13.
<pdu>	String	Protocol data unit: each 8-bit octet is presented as two IRA character long hexadecimal numbers, e.g. octet with integer value 42 is presented to TE as two characters 2A (IRA 50 and 65)
<oa>	String	Originator address
<scts>	String	Service center time stamp in time-string format, see the <dt>

<data>	String	In the case of SMS: 3GPP TS 23.040 [8] TP-User-Data in text mode responses; format:
		• if <dcs> indicates that 3GPP TS 23.038 [7] GSM 7 bit default alphabet is used and <fo> indicates that 3GPP TS 23.040 [8] TP-User-Data-Header-Indication is not set:
		  o if TE character set other than "HEX" (see the +CSCS command in 3GPP TS 27.007 [2]): ME/TA converts GSM alphabet into current TE character set according to rules of Annex A
		  o if TE character set is "HEX": ME/TA converts each 7-bit character of GSM 7 bit default alphabet into two IRA character long hexadecimal number (e.g. character Æ (GSM 7 bit default alphabet 28) is presented as 1C (IRA 49 and 67))
		• if <dcs> indicates that 8-bit or UCS2 data coding scheme is used, or <fo> indicates that 3GPP TS 23.040 [8] TP-User-Data-Header-Indication is set: ME/TA converts each 8-bit octet into two IRA character long hexadecimal number (e.g. octet with integer value 42 is presented to TE as two characters 2A (IRA 50 and 65))
		
		In the case of CBS: 3GPP TS 23.041 [9] CBM Content of Message in text mode responses; format:
		• if <dcs> indicates that 3GPP TS 23.038 [7] GSM 7 bit default alphabet is used:
		  o if TE character set other than "HEX" (see the +CSCS in 3GPP TS 27.007 [2]): ME/TA converts GSM alphabet into current TE character set according to rules of Annex A
		  o if TE character set is "HEX": ME/TA converts each 7-bit character of the GSM 7 bit default alphabet into two IRA character long hexadecimal number
		• if <dcs> indicates that 8-bit or UCS2 data coding scheme is used: ME/TA converts each 8-bit octet into two IRA character long hexadecimal number

<sn>	Number	CBM serial number
<mid>	Number	CBM message identifier
<dcs>	Number	Data Coding Scheme
<page>	Number	CBM Page Parameter bits 4-7 in integer format as described in 3GPP TS 23.041 [9]
<pages>	Number	CBM Page Parameter bits 0-3 in integer format as described in 3GPP TS 23.041 [9]
<fo>	Number	First octet of the SMS TPDU (see 3GPP TS 23.040 [8])
<mr>	Number	Message reference
<ra>	String	Recipient address field
<tora>	Number	Type of address of <ra> - octet
<dt>	String	Discharge time in format "yy/MM/dd,hh:mm:ss+zz"; the time zone is expressed in steps of 15 minutes. The range goes from -48 to +56
<st>	Number	Status of a SMS STATUS-REPORT

Parameter	Type	Description
<message_id>	Number	Message-ID of the 3GPP2 SMS
<priority>	Number	3GPP2 priority: • 0: normal • 1: interactive • 2: urgent • 3: emergency
<privacy>	Number	3GPP2 privacy: • 0: not restricted • 1: restrictive • 2: confidential • 3: secret
<callback_number>	String	Callback number
<encoding>	Number	Text encoding: • 2: ASCII7 • 3: IA5 • 4: UCS2 • 8: ISO 8859-1 • 9: GSM7
<num_sms>	Number	Total number of SMS
<part>	Number	Fragment part number
<reference>	Number	3GPP2 reference ID

11.8.4 Notes

- The incoming SMS/CBM URC indications will be displayed only on the AT interface where the last +CNMI command was set. As a general rule, the command should be issued by the DTE:
  - After start-up
  - After using the Z and &F command (which reset the command configuration)
  - Whenever the incoming SMS URCs indications are requested on a different AT interface
- <mode> = 3 is not supported.

TOBY-L4 / TOBY-L2 / MPCI-L2 / LARA-R2 / TOBY-R2 / SARA-U2 / LISA-U2 / LISA-U1 / SARA-G4 / SARA-G340 / SARA-G350 / LEON-G1

- When <mt> is not set to 0 the arrival of an SMS is notified by switching the RI line from OFF to ON for 1 s. This is done in respect to the RI line of all the AT interfaces.

TOBY-L2 / MPCI-L2

- The RI line switches from OFF to ON state for 1 s both on the AT interface (USB, UART or MUX virtual channel) and on the UART interface (regardless the selected AT command interface) when the +CNMI AT command is issued (with <mt> not set to 0).

TOBY-L200-00S / TOBY-L201 / TOBY-L210-00S / TOBY-L210-60S / MPCI-L200-00S / MPCI-L201 / MPCI-L210-00S / MPCI-L210-60S

- The RI line switching from OFF to ON for 1 s is only performed on the AT interface where the +CNMI command is issued (with <mt> not set to 0).
- <bm> = 1 and <bm> = 3 are not supported.
- <ds> = 2 is not supported.

SARA-U2 / LISA-U2 / LISA-U1 / SARA-G3 / LEON-G1

- The behaviour described in the note above can be configured via the +UDCONF=82 AT command (where this command is supported).
- The +UCMT URC is not supported.

11.9 Incoming SMS/CBM indication via different AT interfaces +UDCONF=82

+UDCONF=82						
Modules	SARA-U201 SARA-U260-03S SARA-U270-03A SARA-U270-03S SARA-U270-04B SARA-U270-53S SARA-U270-73S SARA-U280-03S LISA-U200-03S LISA-U200-83S LISA-U201					
Attributes	Syntax	PIN required	Settings saved	Can be aborted	Response time	Error reference
	full	No	No	No	-	+CME Error

11.9.1 Description

Allows the module to provide SMS/CBM indications on different AT command interfaces: the incoming SMS/CBM URC indications will be displayed on each AT command interface where the command +CNMI is issued.

When the URC indications are disabled, that is <mode> parameter of +CNMI equals to 0 or one (or more) of the +CNMI parameters <mt>, <bm>, <ds> equals 0, they are removed from all the AT terminals

The behaviour regarding the +CNMI values loaded from the module Profile, during start-up phase and by using Z/&F AT commands, remains unchanged.

11.9.2 Syntax

Type	Syntax	Response	Example
Set	AT+UDCONF=82,<CNMI_conf_status>	OK	AT+UDCONF=82,0 OK
Read	AT+UDCONF=82	+UDCONF: 82,<CNMI_conf_status> OK	AT+UDCONF=82 +UDCONF: 82,1 OK

11.9.3 Defined values

Parameter	Type	Description
<CNMI_conf_status>	Number	Enables / disables the incoming SMS/CBM indication via different AT command interfaces. Allowed values: • 0 (factory-programmed value): the incoming SMS/CBM URC indications will be displayed only on the AT interface where the last +CNMI command was issued • 1: the incoming SMS/CBM indications via different AT interfaces is enabled. The URC about the incoming SMS/CBM indications will be displayed on each AT interface where the command +CNMI was issued.

11.10 Select service for MO SMS messages +CGSMS

+CGSMS						
Modules	All products					
Attributes	Syntax	PIN required	Settings saved	Can be aborted	Response time	Error reference
	partial	No	NVM	No	-	+CME Error

11.10.1 Description

Specifies the service (PS or CS) or service preference that the MT will use to send MO SMS messages.

In particular:

- in 2G RAT, PS service means GPRS and CS service means transmission on GSM dedicated channels;
- in 3G RAT, PS service means transmission on PS domain SRB (Signalling Radio Bearer) and CS service means transmission on CS domain SRB; SRB can be mapped to several UMTS transport channels, e.g. RACH/FACH or DCH;
- in 4G RAT, PS service means IMS messaging on EPS bearers and CS service means transmission on SGs (Signalling Gateways).

11.10.2 Syntax

Type	Syntax	Response	Example
Set	AT+CGSMS=[<service>]	OK	AT+CGSMS=1 OK
Read	AT+CGSMS?	+CGSMS: <service> OK	+CGSMS: 1 OK
Test	AT+CGSMS=?	+CGSMS: (list of supported <service>s) OK	+CGSMS: (0-3) OK

11.10.3 Defined values

Parameter	Type	Description
<service>	Number	Service or service preference to be used: • 0 (default value): PS • 1 (factory-programmed value): CS • 2: PS preferred (use CS if PS is not available) • 3: CS preferred (use PS if CS is not available)

11.10.4 Notes

TOBY-L4

- The command setting is not stored in NVM.

TOBY-L2 / MPCI-L2

- The PIN insertion is mandatory before the command execution.

TOBY-L201 / MPCI-L201

- The command setting is not stored in NVM.

TOBY-L220-62S / MPCI-L220-62S

- <service>=0 is not supported.

11.11 Read message +CMGR

+CMGR						
Modules	All products					
Attributes	**Syntax**	**PIN required**	**Settings saved**	**Can be aborted**	**Response time**	**Error reference**
	full	Yes	No	No	<10 s	+CMS Error

11.11.1 Description

Returns the message with location value <index> from message storage <mem1> to the DTE.

☞ The parameters <tooa>, <fo>, <pid>, <dcs>, <sca>, <tosca>, <length>, <cdata> shall be displayed only if +CSDH=1 is set.

☞ The syntax AT+CMGR=0 allows to display an SMS class 0 if it is signalized to MT, because no MMI is available in the MT (see also the +CNMI AT command notes).

☞ If the <index> value is out of range (it depends on AT+CPMS command setting) or it refers to an empty position, then "+CMS ERROR: invalid memory index" error result code is returned.

☞ LARA-R2 / TOBY-R2
It is possible to read SMSes in "ME" also without the PIN insertion (no access to SIM is required when <mem1>= "ME").

11.11.2 Syntax

Type	Syntax	Response	Example
Set	**Text mode (+CMGF=1):** AT+CMGR=<index>	**SMS-DELIVER**	AT+CMGR=303

Type	Syntax	Response	Example
		+CMGR: <stat>,<oa>,[<alpha>], <scts>[,<tooa>,<fo>,<pid>,<dcs>, <sca>,<tosca>,<length>] <data> OK	+CMGR: "REC READ", "+393488535999",,"07/04/05,18:0 2:28+08",145,4,0,0,"+393492000 466",145,93 You have a missed called. Free information provided by your operator. OK
		SMS-SUBMIT +CMGR: <stat>,<da>,[<alpha>][, <toda>,<fo>,<pid>,<dcs>,[<vp>], <sca>,<tosca>,<length>] <data> OK	
		SMS-STATUS-report +CMGR: <stat>,<fo>,<mr>,[<ra>], [<tora>],<scts>,<dt>,<st> OK	
		SMS-COMMAND +CMGR: <stat>,<fo>,<ct>[,<pid>, [<mn>],[<da>],[<toda>],<length> [<cdata>]] OK	
		CBM storage +CMGR: <stat>,<sn>,<mid>,<dcs>, <page>,<pages> <data> OK	
	PDU mode (+CMGF=0): AT+CMGR=<index>	+CMGR: <stat>,[<alpha>],<length> <pdu> OK	AT+CMGR=1 +CMGR: 1,,40 0791934329002000040 C91932309826614000080 70 328045218018D4F29CFE0 6B5CBF379F87C4EBF41E4340 82E7FDBC3 OK
Test	AT+CMGR=?	OK	

11.11.3 Defined values

Parameter	Type	Description
<index>	Number	Storage position
<stat>	Number	• 0: in PDU mode or "REC UNREAD" in text mode: received unread SMS • 1: in PDU mode or "REC READ" in text mode: received read SMS • 2: in PDU mode or "STO UNSENT" in text mode: stored unsent SMS • 3: in PDU mode or "STO SENT" in text mode: stored sent SMS
<oa>	String	Originator address
<alpha>	String	Alphanumeric representation of <da> or <oa> corresponding to the entry found in the phonebook 3GPP TS 24.008 [12]. The parameter is not managed.
<scts>	String	Service center time stamp in time-string format, see <dt>
<tooa>	Number	Type of address of <oa> - octet
<fo>	Number	First octet of the SMS TPDU (see 3GPP TS 23.040 [8])
<pid>	Number	TP-Protocol-Identifier (default 0); see the 3GPP TS 23.040 [8]
<dcs>	Number	Data Coding Scheme
<sca>	String	Service center address field
<tosca>	Number	Type of address of <sca> - octet in Number format (for more details see the 3GPP TS 24.008 [12]); default 145 when string includes '+', otherwise default 129
<length>	Number	Two meanings: • in text mode: number of characters

Parameter	Type	Description
		• in PDU mode: PDU's length in octets without the Service Center's address. In example 0391214301000381 66F6000004E374F80D: this is a PDU with Service Center's number +1234, that generates the address 03912143 (4 octets). Thus in this case <length> = 13.
<data>	String	In the case of SMS: 3GPP TS 23.040 [8] TP-User-Data in text mode responses; format: • if <dcs> indicates that 3GPP TS 23.038 [7] GSM 7 bit default alphabet is used and <fo> indicates that 3GPP TS 23.040 [8] TP-User-Data-Header-Indication is not set: o if TE character set other than "HEX" (see +CSCS command description): ME/TA converts GSM alphabet into current TE character set according to rules of Annex A o if TE character set is "HEX": ME/TA converts each 7-bit character of GSM 7 bit default alphabet into two IRA character long hexadecimal number (e.g. character Æ (GSM 7 bit default alphabet 28) is presented as 1C (IRA 49 and 67)) • if <dcs> indicates that 8-bit or UCS2 data coding scheme is used, or <fo> indicates that 3GPP TS 23.040 [8] TP-User-Data-Header-Indication is set: ME/TA converts each 8-bit octet into two IRA character long hexadecimal number (e.g. octet with integer value 42 is presented to TE as two characters 2A (IRA 50 and 65)) In the case of CBS: 3GPP TS 23.041 [9] CBM Content of Message in text mode responses; format: • if <dcs> indicates that 3GPP TS 23.038 [7] GSM 7 bit default alphabet is used: o if TE character set other than "HEX" (see +CSCS command description): ME/TA converts GSM alphabet into current TE character set according to rules of Annex A o if TE character set is "HEX": ME/TA converts each 7-bit character of the GSM 7 bit default alphabet into two IRA character long hexadecimal number • if <dcs> indicates that 8-bit or UCS2 data coding scheme is used: ME/TA converts each 8-bit octet into two IRA character long hexadecimal number
<da>	String	Destination address
<toda>	Number	Type of address of <da> - octet
<vp>	Number	Format depending of the <fo> setting: • Relative format: validity period starting from when the SMS is received by the SMSC, in range 0-255 (default value 167); for more details see the 3GPP TS 23.040 [8] <vp> — Validity period value 0 to 143 — (TP-VP + 1) x 5 minutes (i.e. 5 minutes intervals up to 12 hours) 144 to 167 — 12 hours + ((TP-VP -143) x 30 minutes) 168 to 196 — (TP-VP - 166) x 1 day 197 to 255 — (TP-VP - 192) x 1 week • Absolute format: absolute time of the validity period termination in string format ("yy/MM/dd,hh:mm:ss+zz") (see the 3GPP TS 23.040 [8]); the time zone is expressed in steps of 15 minutes. The range goes from -48 to +56
<mr>	Number	Message reference
<ra>	String	Recipient address field
<tora>	Number	Type of address of <ra> - octet
<dt>	String	Discharge time in format "yy/MM/dd,hh:mm:ss+zz"; the time zone is expressed in steps of 15 minutes. The range goes from -48 to +56
<st>	Number	Status of an SMS STATUS-REPORT
<ct>	Number	TP-Command-Type (default 0)
<mn>	Number	See the 3GPP TS 23.040 [8] TP-Message-Number in integer format
<cdata>	String	TP-Command-Data in text mode responses
<sn>	Number	CBM serial number
<mid>	Number	CBM message identifier
<page>	Number	3GPP TS 23.041 [9] CBM Page Parameter bits 4-7 in integer format
<pages>	Number	3GPP TS 23.041 [9] CBM Page Parameter bits 0-3 in integer format
<pdu>	String	Protocol data unit: each 8-bit octet is presented as two IRA character long hexadecimal numbers, e.g. octet with integer value 42 is presented to TE as two characters 2A (IRA 50 and 65)

11.11.4 Notes

SARA-G4

- The <dt> parameter is in the format "yyyy/MM/dd,hh:mm:ss+zz".

11.12 New message acknowledgement to MT +CNMA

+CNMA						
Modules	All products					
Attributes	**Syntax**	**PIN required**	**Settings saved**	**Can be aborted**	**Response time**	**Error reference**
	full	Yes	No	No	< 150 s	+CMS Error

11.12.1 Description

Confirms the reception of a new message (SMS-DELIVER or SMS-STATUS-REPORT) which is routed directly to the TE (see the +CNMI command). This acknowledgement command shall be used when +CSMS parameter <service> equals 1. The MT shall not send another +CMT or +CDS (see the +CNMI command) unsolicited result codes to the TE before the previous one is acknowledged. If the MT does not get acknowledgement within required time (network timeout), the MT should respond as specified in 3GPP TS 24.011 [13] to the network. The MT shall automatically disable routing to the TE by setting both <mt> and <ds> values of +CNMI to zero. If the command is executed, but no acknowledgement is expected, or some other MT related error occurs, the final result code +CMS ERROR: <err> is returned.

In PDU mode, it is possible to send either positive (RP-ACK) or negative (RP-ERROR) acknowledgement to the network. The <n> parameter defines which one will be sent. Optionally (when <length> is greater than zero) an acknowledgement TPDU (SMS-DELIVER-REPORT for RP-ACK or RP-ERROR) may be sent to the network. The entering of PDU is done similarly as specified in +CMGS command, except that the format of <ackpdu> is used instead of <pdu> (i.e. SMSC address field is not present). The PDU shall not be bounded by double quotes.

11.12.2 Syntax

Type	Syntax	Response	Example
Set	**Text mode (+CMGF=1):** AT+CNMA	OK	AT+CNMA OK
	PDU mode (+CMGF=0): AT+CNMA[=<n>[,<length> [PDU is given<Ctrl-Z>/<ESC>]]]	OK	AT+CNMA=1,5 >0007000000 <Ctrl-Z> OK
Test	AT+CNMA=?	**Text mode (+CMGF=1):** OK	OK
		PDU mode (+CMGF=0): +CNMA: (list of supported <n>s) OK	+CNMA: (0-2) OK

11.12.3 Defined values

Parameter	Type	Description
<n>	Number	• 0: the command operates similarly as defined for the text mode • 1: sends RP-ACK (or buffered result code received correctly) • 2: sends RP-ERROR (if PDU is not given, ME/TA shall send SMS-DELIVER-REPORT with 3GPP TS 23.040 [8] TP-FCS value set to 'FF' (unspecified error cause))
<length>	Number	PDU's length in octets without the Service Center's address

11.13 List message +CMGL

+CMGL						
Modules	All products					
Attributes	**Syntax**	**PIN required**	**Settings saved**	**Can be aborted**	**Response time**	**Error reference**
	full	Yes	No	No	Up to 3 min (<1 s for prompt ">" when present)	+CMS Error

11.13.1 Description

Returns SMS messages with status value <stat> from message storage <mem1> to the DTE. If status of the received message is "received unread", status in the storage changes to "received read".

☞ TOBY-L4/TOBY-L2/MPCI-L2/LARA-R2/TOBY-R2/SARA-U2/LISA-U2/LISA-U1/SARA-G4/SARA-G3/LEON-G1
Some SMS messages are displayed only when issuing AT+CSDH=1 (detailed SMS header information).

11.13.2 Syntax

Type	Syntax	Response	Example
Set	**Text mode (+CMGF=1):** AT+CMGL[=<stat>]	**Command successful and SMS-DELIVERs:** +CMGL: <index>,<stat>,<oa>,[<alpha>],[<scts>][,<tooa>,<length>] <data> [+CMGL: <index>,<stat>,<oa>,[<alpha>],[<scts>][,<tooa>,<length>]<data>[...]] OK	AT+CMGL +CMGL: 303,"REC READ","+39340 1234999",,"08/08/06,10:01:38+08" You have a missed called. Free information provided by your operator. OK
		Command successful and SMS-SUBMITs: +CMGL: <index>,<stat>,<da>,[<alpha>],[<toda>, <length>] <data> [+CMGL: <index>,<stat>,<da>,[<alpha>],[<toda>, <length>]<data>[...]] OK	
		Command successful and SMS-STATUS-REPORTs: +CMGL: <index>,<stat>,<fo>,<mr>,[<ra>],[<tora>],<scts>,<dt>,<st> [+CMGL: <index>,<stat>,<fo>,<mr>,[<ra>],[<tora>],<scts>,<dt>,<st>[...]] OK	
		Command successful and SMS-COMMANDs: +CMGL: <index>,<stat>,<fo>,<ct> [+CMGL: <index>,<stat>,<fo>,<ct>[...]] OK	
		Command successful and CBM storage: +CMGL: <index>,<stat>,<sn>,<mid>,<page>,<pages><data> [+CMGL: <index>,<stat>,<sn>,<mid>,<page>,<pages>,<data>[...]]	

Type	Syntax	Response	Example
		OK	
	PDU mode (+CMGF=0): AT+CMGL[=<stat>]	**Command successful:** +CMGL: <index>,<stat>,[<alpha>],<length> <pdu> [+CMGL: <index>,<stat>,[<alpha>],<length>] <pdu> [...]	AT+CMGL=1 +CMGL: 305,1,,57 079193432900 1185440ED0D637396C7EBBCB0 000909092708024802A050 003000303DEA0584CE60 205D974791994769BDF3A90 DB759687E9F534FD0DA2C9603419 OK
Test	AT+CMGL=?	+CMGL: (list of supported <stat>s) OK	+CMGL: ("REC UNREAD","REC READ","STO UNSENT","STO SENT", "ALL") OK

11.13.3 Defined values

Parameter	Type	Description
<stat>	Number or String	Number type in PDU mode (default value: 4), or string type in text mode (default value: "ALL"); indicates the status of message in memory: • 0: in PDU mode or "REC UNREAD" in text mode: received unread SMS messages • 1: in PDU mode or "REC READ" in text mode: received read SMS messages • 2: in PDU mode or "STO UNSENT" in text mode: stored unsent SMS messages • 3: in PDU mode or "STO SENT" in text mode: stored sent SMS messages • 4: in PDU mode or "ALL" in text mode: all SMS messages
<index>	Number	Storage position
<oa>	String	Originator address
<alpha>	String	Alphanumeric representation of <da> or <oa> corresponding to the entry found in the phonebook 3GPP TS 24.008 [12]. The parameter is not managed.
<scts>	String	Service center time stamp in time-string format; see the <dt> parameter
<tooa>	Number	Type of address of <oa> - octet
<length>	Number	Two meanings: • in text mode: number of characters • in PDU mode: PDU's length in octets without the Service Center's address. In example 0391214301000381 66F6000004E374F80D: this is a PDU with Service Center's number +1234, that generates the address 03912143 (4 octets). Thus in this case <length> = 13.
<data>	String	This is the TP-User-Data in text mode; the decoding depends on the DCS (Data Coding Scheme) and the FO (First Octect) of the SMS header 3GPP TS 23.040 [8]; format: • if DCS indicates that 3GPP TS 23.038 [7] GSM 7 bit default alphabet is used and FO indicates that 3GPP TS 23.040 [8] TP-User-Data-Header-Indication is not set: o if TE character set other than "HEX" (see the +CSCS AT command description): ME/TA converts GSM alphabet into current TE character set according to rules of Annex A o if TE character set is "HEX": ME/TA converts each 7-bit character of GSM 7 bit default alphabet into two IRA character long hexadecimal number (e.g. character Æ (GSM 7 bit default alphabet 28) is presented as 1C (IRA 49 and 67)) • if DCS indicates that 8-bit or UCS2 data coding scheme is used, or FO indicates that 3GPP TS 23.040 [8] TP-User-Data-Header-Indication is set: ME/TA converts each 8-bit octet into two IRA character long hexadecimal number (e.g. octet with integer value 42 is presented to TE as two characters 2A (IRA 50 and 65)) In the case of CBS: 3GPP TS 23.041 [9] CBM Content of Message in text mode responses; format: • if DCS indicates that 3GPP TS 23.038 [7] GSM 7 bit default alphabet is used: o if TE character set other than "HEX" (see the +CSCS AT command description): ME/TA converts GSM alphabet into current TE character set according to rules of Annex A o if TE character set is "HEX": ME/TA converts each 7-bit character of the GSM 7 bit default alphabet into two IRA character long hexadecimal number

Parameter	Type	Description
		if DCS indicates that 8-bit or UCS2 data coding scheme is used: ME/TA converts each 8-bit octet into two IRA character long hexadecimal number
<da>	String	Destination address
<toda>	Number	Type of address of <da> - octet
<fo>	Number	First octet of the SMS TPDU (see 3GPP TS 23.040 [8])
<mr>	Number	Message reference
<ra>	String	Recipient address field
<tora>	Number	Type of address of <ra> - octet
<dt>	String	Discharge time in format "yy/MM/dd,hh:mm:ss+zz"; the time zone is expressed in steps of 15 minutes. The range goes from -48 to +56
<st>	Number	Status of an SMS STATUS-REPORT
<ct>	Number	TP-Command-Type (default 0)
<sn>	Number	CBM serial number
<mid>	Number	CBM message identifier
<page>	Number	3GPP TS 23.041 [9] CBM Page Parameter bits 4-7 in integer format
<pages>	Number	3GPP TS 23.041 [9] CBM Page Parameter bits 0-3 in integer format
<pdu>	String	Protocol data unit: each 8-bit octet is presented as two IRA character long hexadecimal numbers, e.g. octet with integer value 42 is presented to TE as two characters 2A (IRA 50 and 65)
<dcs>	Number	Data Coding Scheme

11.14 Send message (+CMGS/+CMSS) set commands conclusion configuration +UDCONF=13

+UDCONF=13						
Modules	SARA-U201-04A SARA-U201-04B SARA-U201-04X SARA-U270-04B					
	SARA-G350-53S					
Attributes	**Syntax**	**PIN required**	**Settings saved**	**Can be aborted**	**Response time**	**Error reference**
	full	No	NVM	No	-	+CME Error

11.14.1 Description

Allows +CMGS/+CMSS set commands to conclude the command execution before the SMS message has been sent to the network, i.e. the final result code is returned before any transaction with network takes place.

The URC +UUCMSRES can be configured to have an indication if the sending was successful or not.

11.14.2 Syntax

Type	Syntax	Response	Example
Set	AT+UDCONF=13,<sms_bitmap>	OK	AT+UDCONF=13,3 OK
Read	AT+UDCONF=13	+UDCONF: 13,<sms_bitmap> OK	AT+UDCONF=13 +UDCONF: 13,0 OK
URC		+UUCMSRES: <res>,<mr>	+UUCMSRES: 0,41

11.14.3 Defined values

Parameter	Type	Description
<sms_bitmap>	Number	Bitmask representing the configuration of send message conclusion: • **b0**: enables/disables +CMGS/+CMSS set commands to issue the final result code before the SMS message has been sent to the network. Allowed values: o 0 (factory-programmed value): does not provide the final result code before the transaction with the network takes place o 1: provides the final result code before the transaction with the network takes place

Parameter	Type	Description
		• **b1**: enables/disables the +UUCMSRES URC, which presents the SMS sending result (displayed only on the terminal where +CMGS/+CMSS has been issued). Allowed values: o 0 (factory-programmed value): URC disabled o 1: URC enabled
<res>	Number	SMS message sending result. Allowed values: • 0: no error • Other values: same as <err> in Appendix A.2
<mr>	Number	Message reference

11.15 Send message +CMGS

+CMGS						
Modules	All products					
Attributes	**Syntax**	**PIN required**	**Settings saved**	**Can be aborted**	**Response time**	**Error reference**
	full	Yes	No	No	Up to 3 min (<1 s for prompt ">" when present)	+CMS Error

11.15.1 Description

Sends a message from a DTE to the network (SMS-SUBMIT). The message reference value <mr> is returned to the DTE for a successful message delivery. Optionally (when enabled by +CSMS AT command and the network supports) <ackpdu> is returned. Values can be used to identify message upon unsolicited delivery status report result code. <Ctrl-Z> indicates that the SMS shall be sent, while <ESC> indicates aborting of the edited SMS.

☞ The entered text/PDU is preceded by a ">" (Greater-Than sign) character, and this indicates that the interface is in "text/PDU enter" mode. The DCD signal shall be in ON state while the text/PDU is entered.

11.15.2 Syntax

Type	Syntax	Response	Example
Set	**Text mode (+CMGF=1):** AT+CMGS=<da>[,<toda>]<CR> > text is entered<Ctrl-Z/ESC>	+CMGS: <mr> OK	AT+CMGS="0171112233"<CR> > This is the text<Ctrl-Z> +CMGS: 2 OK
	PDU mode (+CMGF=0): AT+CMGS=<length><CR> > PDU is given<Ctrl-Z/ESC>	+CMGS: <mr>[,<ackpdu>] OK	AT+CMGS=13<CR> > 039121430100038166F6000004E374F80D<Ctrl-Z> +CMGS: 2 OK
Test	AT+CMGS=?	OK	

11.15.3 Defined values

Parameter	Type	Description
<da>	String	Destination address
<toda>	Number	Type of address of <da> - octet
<text>	String	SMS String
<mr>	Number	Message reference
<length>	Number	Two meanings: • in text mode: number of characters • in PDU mode: PDU's length in octets without the Service Center's address. In example 039121430100038166F6000004E374F80D: is a PDU with Service Center's number +1234, that generates the address 03912143 (4 octets). Thus in this case <length>=13.

Parameter	Type	Description
<PDU>	String	Protocol Data Unit: each 8-bit octet of the PDU must be written as two IRA character long hexadecimal numbers, e.g. octet with integer value 42 must be written as two characters 2A (IRA 50 and 65)
<ackpdu>	String	See the 3GPP TS 23.040 [8] RP-User-Data element of RP-ACK PDU; the format is same as for <PDU> in case of SMS

11.15.4 Notes

TOBY-L4 / TOBY-L2 / MPCI-L2 / LARA-R2 / TOBY-R2 / SARA-U2 / LISA-U2 / LISA-U1 / SARA-G4 / SARA-G3 / LEON-G1

- The <ackpdu> parameter is not supported.

11.16 Write message to memory +CMGW

+CMGW						
Modules	All products					
Attributes	**Syntax**	**PIN required**	**Settings saved**	**Can be aborted**	**Response time**	**Error reference**
	full	Yes	No	No	<10 s	+CMS Error

11.16.1 Description

Stores a message (SMS-DELIVER or SMS-SUBMIT) to memory storage <mem2> and returns the memory location <index> of the stored message. <Ctrl-Z> indicates that the SMS shall be stored, while <ESC> indicates aborting of the edited SMS.

☞ The entered text/PDU is preceded by a ">" (Greater-Than sign) character, and this indicates that the interface is in "text/PDU enter" mode. The DCD signal shall be in ON state while the text/PDU is entered.

11.16.2 Syntax

Type	Syntax	Response	Example
Set	**Text mode (+CMGF=1):** AT+CMGW[=<oa/da>[,<tooa/toda>[,<stat>]]]<CR> text is entered<Ctrl-Z/ESC>	+CMGW: <index> OK	AT+CMGW="091137880"<CR> > This is the text<Ctrl-Z> +CMGW: 303 OK
	PDU mode (+CMGF=0): AT+CMGW=<length>[,<stat>]<CR> PDU is given<Ctrl-Z/ESC>	+CMGW: <index> OK	AT+CMGW=13<CR> > 039121430100038166F600000 4E374F80D<Ctrl-Z> +CMGW: 303 OK
Test	AT+CMGW=?	OK	

11.16.3 Defined values

Parameter	Type	Description
<da>	String	TP-Destination-Address Address-Value field (see the 3GPP TS 23.040 [8]); BCD numbers (or GSM 7 bit default alphabet characters) are converted to characters of the currently selected TE character set (see the +CSCS AT command); type of address given by <toda>
<oa>	String	TP-Originating-Address Address-Value field (see the 3GPP TS 23.040 [8]); BCD numbers (or GSM 7 bit default alphabet characters) are converted to characters of the currently selected TE character set (see the +CSCS AT command); type of address given by <tooa>
<tooa>	Number	TP-Originating-Address Type-of-Address octet (see the 3GPP TS 24.011 [13]); see the <toda> parameter for the default value
<toda>	Number	TP-Destination-Address Type-of-Address octet (see the 3GPP TS 24.011 [13]); when the first character of <da> is + (IRA 43) the default value is 145, otherwise it is 129)
<stat>	Number or String	Number type in PDU mode (default value: 2), or string type in text mode (default value: "STO UNSENT"); it indicates the message status in memory:

Parameter	Type	Description
		• 0: in PDU mode or "REC UNREAD" in text mode: received unread SMS messages • 1: in PDU mode or "REC READ" in text mode: received read SMS messages • 2: in PDU mode or "STO UNSENT" in text mode: stored unsent SMS messages • 3: in PDU mode or "STO SENT" in text mode: stored sent SMS messages
<text>	String	SMS string
<index>	Number	Storage position
<length>	Number	The parameter meaning depends on the message format: • In text mode: number of characters • In PDU mode: PDU's length in octets without the Service Center's address. In example: 03912143010003816 6F6000004E374F80D is a PDU with Service Center's number +1234, that generates the address 03912143 (4 octets). Thus in this case <length>=13.
<PDU>	String	Protocol Data Unit: each 8-bit octet of the PDU must be written as two IRA character long hexadecimal numbers, e.g. an octet with integer value 42 must be written as two characters 2A (IRA 50 and 65)

11.16.4 Notes

TOBY-L2 / MPCI-L2

- The <stat> parameter is not supported.

11.17 Send message from storage +CMSS

+CMSS						
Modules	All products					
Attributes	**Syntax**	**PIN required**	**Settings saved**	**Can be aborted**	**Response time**	**Error reference**
	full	Yes	No	No	Up to 3 min	+CMS Error

11.17.1 Description

Sends message with location value <index> from the preferred message storage <mem2> to the network (SMS-SUBMIT or SMS-COMMAND). If a new recipient address <da> is given for SMS-SUBMIT, it will be used instead of the one stored with the message. Reference value <mr> is returned to the DTE on successful message delivery.

11.17.2 Syntax

Type	Syntax	Response	Example
Set	Text mode (+CMGF=1): AT+CMSS=<index>[,<da>[,<toda>]]	+CMSS: <mr> OK	AT+CMSS=302 +CMSS: 3 OK
	PDU mode (+CMGF=0): AT+CMSS=<index>	+CMSS: <mr> OK	AT+CMSS=302 +CMSS: 4 OK
Test	AT+CMSS=?	OK	

11.17.3 Defined values

Parameter	Type	Description
<index>	Number	Storage position
<da>	String	Destination address
<toda>	Number	Type of address of <da> - octet
<mr>	Number	Message reference

11.18 Set text mode parameters +CSMP

+CSMP						
Modules	All products					
Attributes	**Syntax**	**PIN required**	**Settings saved**	**Can be aborted**	**Response time**	**Error reference**
	full	Yes	No	No	< 10 s	+CMS Error

11.18.1 Description

Selects values for additional parameters needed when an SMS is sent to the network or placed in a storage when text format message mode is selected. For more details see the 3GPP TS 23.038 [7] and the 3GPP TS 23.040 [8].

11.18.2 Syntax

Type	Syntax	Response	Example
Set	AT+CSMP=<fo>,<vp>[,<pid>[,<dcs>]]	OK	AT+CSMP=17,167,0,0 OK
Read	AT+CSMP?	+CSMP: <fo>,<vp>,<pid>,<dcs> OK	+CSMP: 17,167,0,0 OK
Test	AT+CSMP=?	OK	

11.18.3 Defined values

Parameter	Type	Description
<fo>	Number	First octet of the SMS TPDU (see 3GPP TS 23.040 [8])
<vp>	Number	Format depending on the values of the bit3/bit4 of the <fo> (SMS-SUBMIT case):

bit 3	bit 4	Format
0	0	Validity period not present
0	1	Validity period present, relative format
1	0	Reserved
1	1	Validity period present, absolute format

- Relative format: validity period, counted from when the SMS-SUBMIT is received by the SMSC, in range 0-255 (the default value is 167); for more details see the 3GPP TS 23.040 [8]

<vp>	Validity period value
0 to 143	(TP-VP + 1) x 5 minutes (i.e. 5 minutes intervals up to 12 hours)
144 to 167	12 hours + ((TP-VP -143) x 30 minutes)
168 to 196	(TP-VP - 166) x 1 day
197 to 255	(TP-VP - 192) x 1 week

- Absolute format: absolute time of the validity period termination in string format ("yy/MM/dd,hh:mm:ss+zz") (see the 3GPP TS 23.040 [8]); the time zone is expressed in steps of 15 minutes. The range goes from -48 to +56

<pid>	Number	TP-Protocol-Identifier (default value: 0); see the 3GPP TS 23.040 [8]
<dcs>	Number	Data Coding Scheme. The default value is 0

11.18.4 Notes

TOBY-L2 / MPCI-L2

- The absolute format of the validity period is not supported.

11.19 Delete message +CMGD

+CMGD						
Modules	All products					
Attributes	**Syntax**	**PIN required**	**Settings saved**	**Can be aborted**	**Response time**	**Error reference**
	partial	Yes	No	No	< 55 s	+CMS Error

11.19.1 Description

Deletes the message from the preferred message storage <mem1>, if <flag>= 0 or not present, in location <index>. Otherwise the messages are deleted following the rules specified by <flag>.

☞ When deleting a message from an empty location, the module returns the "OK" final result code.

☞ If the <index> value is out of range (it depends on AT+CPMS command setting), then the "+CMS ERROR: invalid memory index" error result code is returned.

☞ LARA-R2 / TOBY-R2
It is possible to read SMSes in "ME" also without the PIN insertion (no access to SIM is required when <mem1>= "ME").

11.19.2 Syntax

Type	Syntax	Response	Example
Set	AT+CMGD=<index>[,<flag>]	OK	AT+CMGD=3 OK
Test	AT+CMGD=?	+CMGD: (list of supported <index>s),(list of supported <flag>s) OK	+CMGD: (1-350),(0-4) OK

11.19.3 Defined values

Parameter	Type	Description
<index>	Number	Storage position
<flag>	Number	Deletion flag. If present, and different from 0, the <index> parameter is ignored: • 0 (default value): delete the message specified in <index> • 1: delete all the read messages from the preferred message storage, leaving unread messages and stored mobile originated messages (whether sent or not) untouched • 2: delete all the read messages from the preferred message storage and sent mobile originated messages, leaving unread messages and unsent mobile originated messages untouched • 3: delete all the read messages from the preferred message storage, sent and unsent mobile originated messages leaving unread messages untouched • 4: delete all the messages from the preferred message storage including unread messages

11.19.4 Notes

SARA-G4 / SARA-G3 / LEON-G1

- The "BM" memory entries cannot be deleted.

11.20 Primary notification event reporting +CPNER

+CPNER						
Modules	TOBY-L2 MPCI-L2					
Attributes	**Syntax**	**PIN required**	**Settings saved**	**Can be aborted**	**Response time**	**Error reference**
	full	Yes	No	No	-	+CME Error

11.20.1 Description

Configures the reporting of primary notification events when received from the network. Primary notification events are used for Public Warning Systems like ETWS (Earthquake and Tsunami Warning Systems).

☞ The UE will discard the duplicate primary notification.

☞ The notification is considered a duplicate of the previous if it has equal <message_identifier> and <serial_number> and arrives from the same PLMN. A primary notification message stored to detect duplication is automatically cleared after three hours of not receiving any message.

11.20.2 Syntax

Type	Syntax	Response	Example
Set	AT+CPNER=<reporting>	OK	AT+CPNER=1 OK
Read	AT+CPNER?	+CPNER: <reporting> OK	+CPNER: 1 OK
Test	AT+CPNER=?	+CPNER: (list of supported <reporting>s) OK	+CPNER: (0-1) OK
URC		+CPNERU: <message_identifier>,<serial_number>,<warning_type>	

11.20.3 Defined values

Parameter	Type	Description
<reporting>	Number	Configures the reporting of primary notification events: • 0 (factory-programmed value): primary notification events disabled • 1: primary notification events enabled
<message_identifier>	String	Hexadecimal character format. It contains the message identifier (2 bytes) of the primary notification
<serial_number>	String	Hexadecimal character format. It contains the serial number (2 bytes) of the primary notification
<warning_type>	String	Contains the warning type (2 bytes) of the primary notification.

11.21 Service center address +CSCA

+CSCA						
Modules	All products					
Attributes	Syntax	PIN required	Settings saved	Can be aborted	Response time	Error reference
	full	Yes	No	No	< 10 s	+CMS Error

11.21.1 Description

Updates the SMSC address, through which mobile originated SMSes are transmitted. In text mode the setting is used by send and write commands. In PDU mode the setting is used by the same commands, but only when the length of SMSC address coded into <pdu> parameter equals zero.

☞ TOBY-L4/TOBY-L2/MPCI-L2/LARA-R2/TOBY-R2/SARA-U2/LISA-U2/LISA-U1/SARA-G4/SARA-G3/LEON-G1
This command sets the service center value both in the RAM (this value is actually the SMSC address used) and in the SIM card. Through the read command the value of current service center stored in the RAM is displayed. At the power on, the MT reads the SMSC address in the SIM card and the same value is set in RAM.

11.21.2 Syntax

Type	Syntax	Response	Example
Set	AT+CSCA=<sca>[,<tosca>]	OK	AT+CSCA="0170111000",129 OK
Read	AT+CSCA?	+CSCA: <sca>,<tosca> OK	+CSCA: "",129 OK
Test	AT+CSCA=?	OK	

11.21.3 Defined values

Parameter	Type	Description
<sca>	String	Service center address
<tosca>	String	Type of address of <sca> (for more details refer to 3GPP TS 24.008 [12]); the default is 145 when string includes '+', otherwise the default is 129

11.22 Select cell broadcast message types +CSCB

+CSCB						
Modules	All products					
Attributes	**Syntax**	**PIN required**	**Settings saved**	**Can be aborted**	**Response time**	**Error reference**
	partial	Yes	No	No	< 10 s	+CMS Error

11.22.1 Description

Selects which types of CBM's are to be received by the MT.

11.22.2 Syntax

Type	Syntax	Response	Example
Set	AT+CSCB=[<mode>[,<mids>[,<dcss>]]]	OK	AT+CSCB=0,"1,5,10-11,40","" OK
Read	AT+CSCB?	+CSCB: <mode>,<mids>,<dcss> OK	+CSCB: 0,"","" OK
Test	AT+CSCB=?	+CSCB: (list of supported <mode>s) OK	+CSCB: (0-1) OK

11.22.3 Defined values

Parameter	Type	Description
<mode>	Number	• 0: message types specified in <mids> and <dcss> accepted • 1: message types specified in <mids> and <dcss> not accepted
<mids>	String	Contains all possible combinations of CBM message identifiers (<mid>). See the 3GPP TS 23.041 [9], chapter 9.4. When RAT is UMTS up to 2048 message identifiers can be set; defining an exceeding combination will not cause an error result code and exceeding values will be ignored.
<dcss>	String	Contains all possible combinations of CBM data coding schemes (<dcs>). See the 3GPP TS 23.038 [7], chapter 5.

11.22.4 Notes

- If <mode>=0 and <mids> is an empty string, receiving of CB SMS is stopped.

TOBY-L4

- When RAT is UMTS up to 2053 message identifiers can be set.

TOBY-L2 / MPCI-L2

- The modules read on boot the files below from the USIM and they configure the CBM reception accordingly:
  - EF_{CBMID} (Cell Broadcast Message Identifier for Data Download): this EF contains the message identifier parameters which specify the type of content of the cell broadcast messages which are to be passed to the USIM.
  - EF_{CBMI} (Cell Broadcast Message identifier selection): this EF contains the Message Identifier Parameters which specify the type of content of the cell broadcast messages that the subscriber wishes the UE to accept.
  - EF_{CBMIR} (Cell Broadcast Message Identifier Range selection): this EF contains ranges of cell broadcast message identifiers that the subscriber wishes the UE to accept.
- The maximum number of <mids> is 30.
- These commands perform these actions:

  - AT+CSCB=0 enables all the indications
  - AT+CSCB=1 disables all the indications
- To activate a custom range of mids perform the following actions:
  1. Power on the module, insert a valid SIM and insert its PIN (if needed).
  2. Read the current SIM configuration with AT+CSCB read command.
  3. Modify the configuration by adding or removing some <mids> and/or <dcss> ranges.
  4. Enabling or disabling the reception of all <mids> and <dcss> will be stored in NVM, but not in SIM due to SIM data storage limitations.
  5. If the list must be modified after having enabled or disabled everything add or remove a <mids> or <dcss>, re-read the configuration with the AT+CSCB read command and then set it as needed.

LISA-U1

- When RAT is UMTS up to 1024 message identifiers can be set.

11.23 Read concatenated message +UCMGR

+UCMGR						
Modules	SARA-G3 LEON-G1					
Attributes	**Syntax**	**PIN required**	**Settings saved**	**Can be aborted**	**Response time**	**Error reference**
	full	Yes	No	No	<10 s	+CMS Error

11.23.1 Description

Returns the message with location value <index> from message storage <mem1> to the DTE and shows additional information when the message is a segment of a concatenated one:

- SMS-DELIVER: the parameters <tooa>, <fo>, <pid>, <dcs>, <sca>, <tosca>, <length> shall be displayed only if +CSDH=1 is set.
- SMS-SUBMIT: the parameters <toda>, <fo>, <pid>, <dcs>, <vp>, <sca>, <tosca>, <length> shall be displayed only if +CSDH=1 is set.
- SMS-COMMAND: <pid>, <mn>, <da>, <toda>, <length>, <cdata> shall be displayed only if +CSDH=1 is set.

☞ The syntax AT+UCMGR=0 allows to display an SMS class 0 if it is signalized to MT, because no MMI is available in the MT (see also the +CNMI AT command notes).

☞ If the received message status is "received unread", the status in the storage changes to "received read".

☞ The command is supported only for text mode (+CMGF=1).

☞ If the <index> value is out of range (it depends on the preferred message storage, +CPMS command, settings) or it refers to an empty position, then the "+CMS ERROR: invalid memory index" error result code is returned.

11.23.2 Syntax

Type	Syntax	Response	Example
Set	AT+UCMGR=<index>	**SMS-DELIVER** +UCMGR: <stat>,<oa>,[<alpha>], <scts>[,<tooa>, <fo>,<pid>,<dcs>, <sca>,<tosca>,<length>][,<seq>, <max>,<iei>,<ref>] <data> OK **SMS-SUBMIT** +UCMGR: <stat>,<da>,[<alpha>] [<toda>,<fo>,<pid>,<dcs>,[<vp>], <sca>,<tosca>,<length>][,<seq>, <max>,<iei>,<ref>] <data> OK **SMS-STATUS-report**	AT+UCMGR=1 +UCMGR: "REC READ", "+393488535999",,"07/04/05,18:02:28+08",145,4,0,0,"+393492000466",145,153,1,2,0,127 u-blox reserves all rights to this document and the information contained herein. Reproduction, use or disclosure to third parties without express permis OK

Type	Syntax	Response	Example
		+UCMGR:<stat>,<fo>,<mr>,[<ra>],[<tora>]<scts><dt>,<st> OK	
		SMS-COMMAND +UCMGR: <stat>,<fo>,<ct>[,<pid>,[<mn>],[<da>],[<toda>],<length> [<cdata>]] OK	
		CBM storage +UCMGR: <stat>,<sn>,<mid>,<dcs>,<page>,<pages> <data> OK	
Test	AT+UCMGR=?	OK	

11.23.3 Defined values

Parameter	Type	Description
<index>	Number	Storage position
<stat>	String	Indicates the status of message in memory: • "REC UNREAD": received unread SMS • "REC READ": received read SMS • "STO UNSENT": stored unsent SMS • "STO SENT": stored sent SMS
<oa>	String	Originator address
<alpha>	String	Alphanumeric representation of <da> or <oa> corresponding to the entry found in the phonebook 3GPP TS 24.008 [12]. The parameter is not managed.
<scts>	String	Service center time stamp in time-string format, refer to <dt>
<tooa>	Number	Type of address of <oa> - octet
<fo>	Number	First octet of the SMS TPDU (see 3GPP TS 23.040 [8])
<pid>	Number	TP-Protocol-Identifier (default 0); see 3GPP TS 23.040 [8]
<dcs>	Number	Data Coding Scheme
<sca>	String	Service center address field
<tosca>	Number	Type of address of <sca> - octet in Number format (for more details see 3GPP TS 24.008 [12]); default 145 when string includes '+', otherwise default 129
<length>	Number	Number of characters
<seq>	Number	Sequence number of the current short message (1-255)
<max>	Number	Maximum number of short messages in the concatenated short message (1-255)
<iei>	Number	Information Element Identifier, the possible values are the following: • 0: Concatenated short messages, 8-bit reference number • 8: Concatenated short messages, 16-bit reference number
<ref>	Number	Concatenated short message reference number: • 0-255: concatenated short messages, 8-bit reference number case • 0-65535: concatenated short messages, 16-bit reference number case

<data>	String	In the case of SMS: 3GPP TS 23.040 [8] TP-User-Data in text mode responses; format:
		• if <dcs> indicates that 3GPP TS 23.038 [7] GSM 7 bit default alphabet is used and <fo> indicates that 3GPP TS 23.040 [8] TP-User-Data-Header-Indication is not set:
		  o if TE character set other than "HEX" (see the +CSCS AT command description): ME/TA converts GSM alphabet into current TE character set according to rules of 3GPP TS 27.005 [16] Annex A
		  o if TE character set is "HEX": ME/TA converts each 7-bit character of GSM 7 bit default alphabet into two IRA character long hexadecimal number (e.g. character Æ (GSM 7 bit default alphabet 28) is presented as 1C (IRA 49 and 67))
		• if <dcs> indicates that 8-bit or UCS2 data coding scheme is used, or <fo> indicates that 3GPP TS 23.040 [8] TP-User-Data-Header-Indication is set: ME/TA converts each 8-bit octet into two IRA character long hexadecimal number (e.g. octet with integer value 42 is presented to TE as two characters 2A (IRA 50 and 65))

Parameter	Type	Description
		In the case of CBS: 3GPP TS 23.041 [9] CBM Content of Message in text mode responses; format: • if <dcs> indicates that 3GPP TS 23.038 [7] GSM 7 bit default alphabet is used: o if TE character set other than "HEX" (see the +CSCS AT command description): ME/TA converts GSM alphabet into current TE character set according to rules of 3GPP TS 27.005 [16] Annex A o if TE character set is "HEX": ME/TA converts each 7-bit character of the GSM 7 bit default alphabet into two IRA character long hexadecimal number if <dcs> indicates that 8-bit or UCS2 data coding scheme is used: ME/TA converts each 8-bit octet into two IRA character long hexadecimal number
<da>	String	Destination address
<toda>	Number	Type of address of <da> - octet
<vp>	Number	Format depending of the <fo> setting: • Relative format: validity period starting from when the SMS is received by the SMSC, in range 0-255 (default value 167); for more details see 3GPP TS 23.040 [8] • Absolute format: absolute time of the validity period termination in string format ("yy/MM/dd,hh:mm:ss+zz") (refer to 3GPP TS 23.040 [8]); the time zone is expressed in steps of 15 minutes. The range goes from -48 to +56
<mr>	Number	Message reference
<ra>	String	Recipient address field
<tora>	Number	Type of address of <ra> - octet
<scts>	String	Service center time stamp in time-string format, refer to <dt>
<dt>	String	Discharge time in format "yy/MM/dd,hh:mm:ss+zz"; the time zone is expressed in steps of 15 minutes. The range goes from -48 to +56
<st>	Number	Status of an SMS STATUS-REPORT
<ct>	Number	TP-Command-Type (default 0)
<mn>	Number	3GPP TS 23.040 [8] TP-Message-Number in integer format
<mid>	Number	CBM message identifier
<cdata>	String	TP-Command-Data in text mode responses
<sn>	Number	CBM serial number
<page>	Number	3GPP TS 23.041 [9] CBM page parameter bits 4-7 in integer format
<pages>	Number	3GPP TS 23.041 [9] CBM page parameter bits 0-3 in integer format

<vp>	Validity period value
0 to 143	(TP-VP + 1) x 5 minutes (i.e. 5 minutes intervals up to 12 hours)
144 to 167	12 hours + ((TP-VP -143) x 30 minutes)
168 to 196	(TP-VP - 166) x 1 day
197 to 255	(TP-VP - 192) x 1 week

11.24 List concatenated message +UCMGL

+UCMGL						
Modules	SARA-G3 LEON-G1					
Attributes	**Syntax**	**PIN required**	**Settings saved**	**Can be aborted**	**Response time**	**Error reference**
	full	Yes	No	No	Up to 3 min (<1 s for prompt ">" when present)	+CMS Error

11.24.1 Description

Returns SMS messages with status value <stat> from message storage <mem1> to the DTE and shows additional information when the message is a segment of a concatenated one:

- SMS-DELIVER: the parameters <tooa>, <length> shall be displayed only if +CSDH=1 is set.
- SMS-SUBMIT: the parameters <toda>, <length> shall be displayed only if +CSDH=1 is set.

☞ If status of the received message is "received unread", status in the storage changes to "received read".

☞ The command is supported only for text mode (+CMGF=1).

11.24.2 Syntax

Type	Syntax	Response	Example
Set	AT+UCMGL[=<stat>]	**SMS-DELIVERs:** +UCMGL: <index>,<stat>,<oa>,[<alpha>],[<scts>][,<tooa>,<length>][,<seq>,<max>,<iei>,<ref>] <data> [+UCMGL: <index>,<stat>,<oa>,[<alpha>],[<scts>][,<tooa>,<length>][,<seq>,<max>,<iei>,<ref>]<data>[...]] OK	AT+UCMGL +UCMGL: 304,"REC READ","+39340 1234999",,"08/08/06,10:01:38+08",145,152,1,2,8,32767 u-blox reserves all rights to this document and the information contained herein. Reproduction, use or disclosure to third parties without express permi +UCMGL: 305,"REC READ","+39340 1234999",,"08/08/06,10:01:40+08",145,29,2,2,8,32767 ssion is strictly prohibited. OK
		SMS-SUBMITs: +UCMGL: <index>,<stat>,<da>,[<alpha>],[<toda>, <length>][,<seq>,<max>,<iei>,<ref>] <data> [+UCMGL: <index>,<stat>,<da>,[<alpha>],[<toda>,<length>][,<seq>,<max>,<iei>,<ref>]<data>[...]] OK	
		SMS-STATUS-REPORTs: +UCMGL: <index>,<stat>,<fo>,<mr>,[<ra>],[<tora>],<scts>,<dt>,<st> [+UCMGL: <index>,<stat>,<fo>,<mr>,[<ra>],[<tora>],<scts>,<dt>,<st> [...]] OK	
		SMS-COMMANDs: +UCMGL: <index>,<stat>,<fo>,<ct> [+UCMGL: <index>,<stat>,<fo>,<ct>[...]] OK	
		CBM storage: +UCMGL: <index>,<stat>,<sn>,<mid>,<page>,<pages><data> [+UCMGL: <index>,<stat>,<sn>,<mid>,<page>,<pages>,<data>[...]] OK	
Test	AT+UCMGL=?	+UCMGL: (list of supported <stat>s) OK	+UCMGL: ("REC UNREAD","REC READ","STO UNSENT","STO SENT", "ALL ") OK

11.24.3 Defined values

Parameter	Type	Description
<stat>	String	Indicates the status of message in memory: • "REC UNREAD": received unread SMS messages • "REC READ": received read SMS messages • "STO UNSENT": stored unsent SMS messages • "STO SENT": stored sent SMS messages

Parameter	Type	Description
		• "ALL": all SMS messages (default value)
<index>	Number	Storage position
<oa>	String	Originator address
<alpha>	String	Alphanumeric representation of <da> or <oa> corresponding to the entry found in the phonebook 3GPP TS 24.008 [12]. The parameter is not managed.
<scts>	String	Service center time stamp in time-string format; refer to <dt>
<tooa>	Number	Type of address of <oa> - octet
<length>	Number	Number of characters
<seq>	Number	Sequence number of the current short message (1-255)
<max>	Number	Maximum number of short messages in the concatenated short message (1-255)
<iei>	Number	Information Element Identifier, the possible values are the following: • 0: concatenated short messages, 8-bit reference number • 8: concatenated short messages, 16-bit reference number
<ref>	Number	Concatenated short message reference number: • 0-255: concatenated short messages, 8-bit reference number case • 0-65535: concatenated short messages, 16-bit reference number case
<data>	String	In the case of SMS: 3GPP TS 23.040 [8] TP-User-Data in text mode responses; format: • if <dcs> indicates that 3GPP TS 23.038 [7] GSM 7 bit default alphabet is used and <fo> indicates that 3GPP TS 23.040 [8] TP-User-Data-Header-Indication is not set: o if TE character set other than "HEX" (see the +CSCS AT command description): ME/TA converts GSM alphabet into current TE character set according to rules of 3GPP TS 27.005 Annex A [16] o if TE character set is "HEX": ME/TA converts each 7-bit character of GSM 7 bit default alphabet into two IRA character long hexadecimal number (e.g. character Æ (GSM 7 bit default alphabet 28) is presented as 1C (IRA 49 and 67)) • if <dcs> indicates that 8-bit or UCS2 data coding scheme is used, or <fo> indicates that 3GPP TS 23.040 [8] TP-User-Data-Header-Indication is set: ME/TA converts each 8-bit octet into two IRA character long hexadecimal number (e.g. octet with integer value 42 is presented to TE as two characters 2A (IRA 50 and 65)) In the case of CBS: 3GPP TS 23.041 [9] CBM Content of Message in text mode responses; format: • if <dcs> indicates that 3GPP TS 23.038 [7] GSM 7 bit default alphabet is used: o if TE character set other than "HEX" (see the +CSCS AT command description): ME/TA converts GSM alphabet into current TE character set according to rules of 3GPP TS 27.005 [16] Annex A • if TE character set is "HEX": ME/TA converts each 7-bit character of the GSM 7 bit default alphabet into two IRA character long hexadecimal number if <dcs> indicates that 8-bit or UCS2 data coding scheme is used: ME/TA converts each 8-bit octet into two IRA character long hexadecimal number
<da>	String	Destination address
<toda>	Number	Type of address of <da> - octet
<fo>	Number	First octet of the SMS TPDU (see 3GPP TS 23.040 [8])
<mr>	Number	Message reference
<ra>	String	Recipient address field
<tora>	Number	Type of address of <ra> - octet
<dt>	String	Discharge time in format "yy/MM/dd,hh:mm:ss+zz"; the time zone is expressed in steps of 15 minutes. The range goes from -48 to +56
<st>	Number	Status of an SMS STATUS-REPORT
<ct>	Number	TP-Command-Type (default 0)
<sn>	Number	CBM serial number
<mid>	Number	CBM message identifier
<page>	Number	3GPP TS 23.041 [9] CBM Page Parameter bits 4-7 in integer format
<pages>	Number	3GPP TS 23.041 [9] CBM Page Parameter bits 0-3 in integer format
<dcs>	Number	Data Coding Scheme

11.25 Send concatenated message +UCMGS

+UCMGS						
Modules	SARA-G3 LEON-G1					
Attributes	**Syntax**	**PIN required**	**Settings saved**	**Can be aborted**	**Response time**	**Error reference**
	full	Yes	No	No	Up to 3 min (<1 s for prompt ">" when present)	+CMS Error

11.25.1 Description

Sends one segment of a concatenated message from a DTE to the network (SMS-SUBMIT). The message reference value <mr> is returned to the DTE for a successful message delivery. <Ctrl-Z> indicates that the SMS shall be sent, while <ESC> indicates aborting of the edited SMS.

☞ The command is supported only for text mode (+CMGF=1).

☞ The entered text is preceded by a ">" (Greater-Than sign) character, and this indicates that the interface is in "text enter" mode. The DCD signal shall be in ON state while the text is entered.

11.25.2 Syntax

Type	Syntax	Response	Example
Set	AT+UCMGS=<da>,[<toda>],<seq>,<max>,<iei>,<ref><CR> text is entered<Ctrl-Z/ESC>	+UCMGS: <mr> OK	AT+UCMGS="0171112233",,1,2,0,127<CR> > u-blox reserves all rights to this document and the information contained herein. Reproduction, use or disclosure to third parties without express permis<Ctrl-Z> +UCMGS:2 OK AT+UCMGS="0171112233",,2,2,0,127<CR> > sion is strictly prohibited.<Ctrl-Z> +UCMGS:3 OK
Test	AT+UCMGS=?	OK	

11.25.3 Defined values

Parameter	Type	Description
<da>	String	Destination address
<toda>	Number	Type of address of <da> - octet
<seq>	Number	Sequence number of the current short message (1-255)
<max>	Number	Maximum number of short messages in the concatenated short message (1-255)
<iei>	Number	Information Element Identifier, the possible values are the following: • 0: Concatenated short messages, 8-bit reference number • 8: Concatenated short messages, 16-bit reference number
<ref>	Number	Concatenated short message reference number: • 0-255: Concatenated short messages, 8-bit reference number case • 0-65535: Concatenated short messages, 16-bit reference number case
<text>	String	SMS String
<mr>	Number	Message reference

11.26 Write concatenated message to memory +UCMGW

+UCMGW						
Modules	SARA-G3 LEON-G1					
Attributes	**Syntax**	**PIN required**	**Settings saved**	**Can be aborted**	**Response time**	**Error reference**
	full	Yes	No	No	< 10 s	+CMS Error

11.26.1 Description

Stores one segment of a concatenated message (SMS-DELIVER or SMS-SUBMIT) to memory storage <mem2> and returns the memory location <index> of the stored message. <Ctrl-Z> indicates that the SMS shall be stored, while <ESC> indicates aborting of the edited SMS.

☞ The command is supported only for text mode (+CMGF=1)

☞ The entered text is preceded by a ">" (Greater-Than sign) character, and this indicates that the interface is in "text enter" mode. The DCD signal shall be in ON state while the text is entered.

11.26.2 Syntax

Type	Syntax	Response	Example
Set	AT+UCMGW=[<oa/da>],[<tooa/toda>],[<stat>],<seq>,<max>,<iei>,<ref><CR> text is entered<Ctrl-Z/ESC>	+UCMGW: <index> OK	AT+UCMGW="091137880",,,1,2,8,32767<CR> > u-blox reserves all rights to this document and the information contained herein. Reproduction, use or disclosure to third parties without express permi<Ctrl-Z> +UCMGW:302 OK AT+UCMGW="091137880",,,2,2,8,32767<CR> > ssion is strictly prohibited.<Ctrl-Z> +UCMGW:303 OK
Test	AT+UCMGW=?	OK	

11.26.3 Defined values

Parameter	Type	Description
<da>	String	3GPP TS 23.040 [8] TP-Destination-Address Address-Value field in string format; BCD numbers (or GSM 7 bit default alphabet characters) are converted to characters of the currently selected TE character set (refer command +CSCS in 3GPP TS 27.007 [2]); type of address given by <toda>
<oa>	String	3GPP TS 23.040 [8] TP-Originating-Address Address-Value field in string format; BCD numbers (or GSM 7 bit default alphabet characters) are converted to characters of the currently selected TE character set (refer command +CSCS chapter Chapter 4.10); type of address given by <tooa>
<tooa>	Number	3GPP TS 24.011 [13] TP-Originating-Address Type-of-Address octet in integer format (default refer <toda>)
<toda>	Number	3GPP TS 24.011 [13] TP-Destination-Address Type-of-Address octet in integer format (when first character of <da> is + (IRA 43) default is 145, otherwise default is 129)
<stat>	String	Indicates the status of message in memory: • "REC UNREAD": received unread SMS messages • "REC READ": received read SMS messages • "STO UNSENT": stored unsent SMS messages • "STO SENT": stored sent SMS messages (default value)
<seq>	Number	Sequence number of the current short message (1-255)
<max>	Number	Maximum number of short messages in the concatenated short message (1-255)

Parameter	Type	Description
<iei>	Number	Information Element Identifier, the possible values are the following: • 0: Concatenated short messages, 8-bit reference number • 8: Concatenated short messages, 16-bit reference number
<ref>	Number	Concatenated short message reference number: • 0-255: Concatenated short messages, 8-bit reference number case • 0-65535: Concatenated short messages, 16-bit reference number case
<text>	String	SMS String
<index>	Number	Storage position

11.27 More messages to send +CMMS

+CMMS						
Modules	TOBY-L4 TOBY-L200-02S TOBY-L200-03A TOBY-L200-03S TOBY-L210-02S TOBY-L210-03A TOBY-L210-03S TOBY-L210-62S TOBY-L220 TOBY-L280 MPCI-L200-02S MPCI-L200-03S MPCI-L210-02S MPCI-L210-03S MPCI-L220 MPCI-L280					
	LARA-R2 TOBY-R2					
	SARA-U2 LISA-U2 LISA-U1					
Attributes	**Syntax**	**PIN required**	**Settings saved**	**Can be aborted**	**Response time**	**Error reference**
	full	Yes	No	No	-	+CMS Error

11.27.1 Description

Controls the continuity of SMS relay protocol link. When enabled, multiple SMS messages can be sent much faster as link is kept open.

11.27.2 Syntax

Type	Syntax	Response	Example
Set	AT+CMMS=[<mode>]	OK	AT+CMMS=2 OK
Read	AT+CMMS?	+CMMS: <mode> OK	+CMMS: 2 OK
Test	AT+CMMS=?	+CMMS: (list of supported <mode>s) OK	+CMMS: (0-2) OK

11.27.3 Defined values

Parameter	Type	Description
<mode>	Number	• 0 (default value): disabled • 1: keep enabled until the time between the response of the latest message send command (such as +CMGS) and the next send command exceeds 5 s, then close the link and switch <mode> automatically back to 0 • 2: keep permanently enabled. The link is closed after each send sequence, but <mode> is not switched back to 0

11.28 Peek message +UCMGP

+UCMGP						
Modules	TOBY-L200-02S TOBY-L200-03A TOBY-L200-03S TOBY-L210-02S TOBY-L210-03A TOBY-L210-03S TOBY-L210-62S TOBY-L220 TOBY-L280 MPCI-L200-02S MPCI-L200-03S MPCI-L210-02S MPCI-L210-03S MPCI-L220 MPCI-L280					
	LARA-R2 TOBY-R2					
	SARA-U2 LISA-U200-01S LISA-U200-02S LISA-U200-03S LISA-U200-52S LISA-U200-62S LISA-U200-83S LISA-U201 LISA-U230 LISA-U260 LISA-U270					
Attributes	**Syntax**	**PIN required**	**Settings saved**	**Can be aborted**	**Response time**	**Error reference**
	full	Yes	No	No	<10 s	+CMS Error

11.28.1 Description

Returns the message with location value <index> from message storage <mem1> to the DTE, the same as +CMGR does.

The SMS message is only 'peeked', i.e. its status is not forced to "received read SMS mode" after reading.

The syntax, defined values and remarks are the same as described for +CMGR.

☞ The PIN verification is not required when the preferred memory storage is "ME".

11.28.2 Syntax

Type	Syntax	Response	Example
Set	**Text mode (+CMGF=1):** AT+UCMGP=<index>	**(SMS-DELIVER)** +UCMGP: <stat>,<oa>,[<alpha>],<scts>[,<tooa>,<fo>,<pid>,<dcs>,<sca>,<tosca>,<length>] <data> OK **(SMS-SUBMIT)** +UCMGP: <stat>,<da>,[<alpha>][,<toda>,<fo>,<pid>,<dcs>,[<vp>],<sca>,<tosca>,<length>] <data> OK **(SMS-STATUS-report)** +UCMGP: <stat>,<fo>,<mr>,[<ra>],[<tora>],<scts>,<dt>,<st> OK **(SMS-COMMAND)** +UCMGP: <stat>,<fo>,<ct>[,<pid>,[<mn>],[<da>],[<toda>],<length> [<cdata>]] OK **(CBM storage)** +UCMGP: <stat>,<sn>,<mid>,<dcs>,<page>,<pages> <data> OK	AT+UCMGP=303 +UCMGP: "REC UNREAD", "+393488535999",,"07/04/05,18:02:28+08",145,4,0,0,"+393492000466",145,93 You have a missed called. Free information provided by your operator. OK
	PDU mode (+CMGF=0): AT+UCMGP=<index>	+UCMGP: <stat>,[<alpha>],<length> <pdu> OK	AT+UCMGP=1 +UCMGP: 0,,40 07919343290020000 40C9193230982

Type	Syntax	Response	Example
			6614000080703280452180 18D4F29CF E06B5CBF379F87C4EBF41E4340 82E7F DBC3 OK
Test	AT+UCMGP=?	OK	

11.28.3 Defined values

Parameter	Type	Description
<index>	Number	Storage position

11.29 Message waiting indication +UMWI

+UMWI						
Modules	TOBY-L4006 TOBY-L200-02S TOBY-L200-03A TOBY-L200-03S TOBY-L210-02S TOBY-L210-03A TOBY-L210-03S TOBY-L210-62S TOBY-L220 TOBY-L280 MPCI-L200-02S MPCI-L200-03S MPCI-L210-02S MPCI-L210-03S MPCI-L220 MPCI-L280					
	LARA-R2 TOBY-R2					
	SARA-U2 LISA-U200-01S LISA-U200-02S LISA-U200-03S LISA-U200-52S LISA-U200-62S LISA-U200-83S LISA-U201 LISA-U230 LISA-U260 LISA-U270					
Attributes	**Syntax**	**PIN required**	**Settings saved**	**Can be aborted**	**Response time**	**Error reference**
	full	No	No	No	-	+CME Error

11.29.1 Description

Provides information regarding the Message Waiting Indication (MWI) third level method (3GPP defined in 3GPP TS 23.040 [8]) and CPHS method [66] following AT&T Device Requirements [61].

The set command enables / disables the URC presentation. The URCs are by default enabled.

MWI is based on specific EFs not present in all SIM cards. In case these EFs are not present, the information text response is an error result code ("+CME ERROR: operation not allowed" if +CMEE is set to 2) and no URCs will be displayed.

☞ The URCs are displayed in groups of variable number which depends on the EFs present in the SIM card 3GPP TS 31.102 [19] and Common PCN Handset Specification [66].

11.29.2 Syntax

Type	Syntax	Response	Example
Set	AT+UMWI=<mode>	OK	AT+UMWI=1 OK
Read	AT+UMWI?	+UMWI: <mode>,<status>,<type>[,<count>] [+UMWI: <mode>,<status>,<type>[,<count>][...]] OK	+UMWI: 1,0,1 +UMWI: 1,0,2 +UMWI: 1,1,3,255 +UMWI: 1,0,4 OK
Test	AT+UMWI=?	+UMWI: (list of supported <mode>s) OK	+UMWI: (0-1) OK
URC		+UMWI: <status>,<type>[,<count>] [+UMWI: <status>,<type>[,<count>] [...]]	+UMWI: 1,1,3 +UMWI: 1,2,5 +UMWI: 1,3,255 +UMWI: 0,4

11.29.3 Defined values

Parameter	Type	Description
<mode>	Number	Indicates whether the +UMWI URC is enabled or not: • 0: disable the +UMWI URC • 1 (factory-programmed value): enable the +UMWI URC
<status>	Number	Indicator the status for the respective <type>: • 0: clear; no messages waiting • 1: set; messages waiting
<type>	Number	Indicates the basic message indication type: • 1: Voice Message Waiting (third level method) or Voice Message Waiting on Line 1 (CPHS method) • 2: Fax Message Waiting • 3: Electronic Mail Message Waiting • 4: Extended Message Type Waiting (i.e. see the 3GPP TS 23.038 [7]) • 5: Video Message Waiting • 6: Voice Message Waiting on Line 2 (CPHS method) • 7: reserved for future use
<count>	Number	Number of messages waiting for the respective <type>, range 1-255. 255 means that the number of waiting messages is unknown.

11.29.4 Notes

- If <status>=0, the <count> parameter is omitted.

11.30 Earthquake and Tsunami Warning System configuration +UETWCFG

+UETWCFG						
Modules	LARA-R220					
	SARA-U201-63B					
Attributes	**Syntax**	**PIN required**	**Settings saved**	**Can be aborted**	**Response time**	**Error reference**
	full	No	No	No	-	+CME Error

11.30.1 Description

Configures the reception of the Earthquake and Tsunami Warning System (ETWS) notifications. The duplication detection is done based on 3GPP TS 23.041 [9].

11.30.2 Syntax

Type	Syntax	Response	Example
Set	AT+UETWCFG=<PrimaryNtf>,<SecondaryNtf>,<SecondaryCfg>,<DuplicateNtf>	OK	AT+UETWCFG=1,1,0,0 OK
Read	AT+UETWCFG?	AT+UETWCFG: <PrimaryNtf>,<SecondaryNtf>,<SecondaryCfg>,<DuplicateNtf>	+UETWCFG: 1,1,0,0 OK
Test	AT+UETWCFG=?	+UETWCFG: (list of the supported <PrimaryNtf>s),(list of the supported <SecondaryNtf>s),(list of the supported <SecondaryCfg>s),(list of the supported <DuplicateNtf>s) OK	+UETWCFG: (0,1),(0,1),(0,1),(0,1) OK

11.30.3 Defined values

Parameter	Type	Description
<PrimaryNtf>	Number	Primary notification status: • 0: primary notification disabled

Parameter	Type	Description
		• 1: primary notification enabled
<SecondaryNtf>	Number	Configures the reception of the secondary notification, independent of the reception of the corresponding primary notification: • 0: disable the immediate reception of the secondary notification • 1: enable the immediate reception of the secondary notification
<SecondaryCfg>	Number	Configures the security configuration: • 0: security check disabled • 1: security check enabled
<DuplicateNtf>	Number	Configures the setting for ignoring duplicate notifications: • 0: ignore all duplicate notifications • 1: ignore duplicate secondary notifications

11.30.4 Notes

SARA-U201-63B

- The command is not supported by SARA-U201-63B-00.

11.31 Start ETWS notifications +UETWNTFYSTART

+UETWNTFYSTART						
Modules	LARA-R220					
	SARA-U201-63B					
Attributes	**Syntax**	**PIN required**	**Settings saved**	**Can be aborted**	**Response time**	**Error reference**
	partial	No	No	No	-	+CME Error

11.31.1 Description

Starts the ETWS warning notifications:

- **Primary Notification**: is the information which is used specifically in the ETWS to notify users about the most urgent event in seconds rather than minutes, such as imminent occurrence of Earthquake.
- **Secondary Notification**: is the information which is used specifically in the ETWS to notify users about supplementary information that is of lesser urgency such as instructions on what to do / where to get help, for example, map to refuge facilities, time table of food distribution.

These information, in general, would be issued by the local government. The coding scheme decides the format in which this URC is displayed. See <CbData> description below for more details.

11.31.2 Syntax

Type	Syntax	Response	Example
Set	AT+UETWNTFYSTART=<WarningType>[,<NrRanges>[,<MidRangeLow_1>,<MidRangeHigh_1>[,...<MidRangeLow_n>,<MidRangeHigh_n>]]]	OK	AT+UETWNTFYSTART=5,1,40961,40961 OK
Read	AT+UETWNTFYSTART?	AT+UETWNTFYSTART: <WarningType> OK	+UETWNTFYSTART: 5 OK
Test	AT+UETWNTFYSTART=?	+UETWNTFYSTART: (list of the supported <WarningType>s) [,(list of the supported <NrRanges>),(list of the supported <MidRangeLow_n>s),(list of the supported <MidRangeHigh_n>s)] OK	+UETWNTFYSTART: (0-6),(1-100),(0-65535),(0-65535) OK
URC		+UETWPRIWARN: <SerialNo>,<MsgId>,<WarningTypePar>,<SecurityStatus>	
URC		+UETWSECWARN: <SerialNo>,<MsgId>,<CodingScheme>,	

Type	Syntax	Response	Example
		<CurrentPage>,<NoPages>, <CbData>	

11.31.3 Defined values

Parameter	Type	Description
<WarningType>	Number	Sets the warning type when the ETWS is used. Allowed warning type values (see the 3GPP TS 23.041 [9]): • 0: only earthquake • 1: only tsunami • 2: both earthquake and tsunami • 3: test mode will be activated • 4: others • 5: MSG ID range list for non-test Message identifiers is used • 6: MSG ID range list for Test Message identifiers is used
<NrRanges>	Number	Number of message identifiers ranges
<MidRangeLow_n>	Number	Message identifier low range
<MidRangeHigh_n>	Number	Message identifier high range
<SerialNo>	Number	16-bit integer which identifies a particular CBS message (which may be one to fifteen pages in length) from the source and type indicated by the Message Identifier and is altered every time the CBS message with a given Message Identifier is changed. The two octets of the Serial Number field are divided into a 2-bit Geographical Scope (GS) indicator, a 10-bit Message Code and a 4-bit Update Number. The parameter is defined in the 3GPP TS 23.041 [9].
<MsgId>	Number	The message identifier parameter identifies the source and type of the CBS message. For example, "Automotive Association"(= source), "Traffic Reports" (= type) could correspond to one value. A number of CBS messages may originate from the same source and/or be of the same type. These will be distinguished by the Serial Number. The Message Identifier is coded in binary. The parameter is defined in the 3GPP TS 23.041 [9].
<SecurityStatus>	Number	Indicates brief ETWS security status. Allowed values: • 0: default, no security check done • 1: security check passed • 2: no security parameters have been received • 3: security check failed The parameter is defined in 3GPP TS 23.041 [9]
<CodingScheme>	Number	Identifies the alphabet or coding employed for the message characters and message handling at the MS/UE and is passed transparently from the CBC to the MS/UE. The CBS Data Coding Scheme indicates the intended handling of the message at the MS, the character set/coding, and the language (when applicable). Any reserved codings shall be assumed to be the GSM 7 bit default alphabet (the same as codepoint 00001111) by a receiving entity. This parameter is defined in the 3GPP TS 23.038 [7].
<CurrentPage>	Number	The current page number being displayed
<NoPages>	Number	Total number of pages within the message
<CbData>	String	The raw data of CBS will be unpacked and displayed in text format, in case the coding scheme is decoded as English language (see the 3GPP TS 23.041 [9]). If not, the PDU format of the data (each page) is output as below: +UETWSECWARN: <length><CR><LF><pdu>
<WarningTypePar>	Number	Two bytes number in decimal format, that can be converted into hex format and interpreted as per the 3GPP TS 23.041 [9]): • Octet 1, bit 1-7: warning type value • Octet 1, bit 0: emergency • Octet 2, bit 7: pop-up • Octet 2, bit 6-0: padding

11.31.4 Notes

- If <WarningType>=3 (test mode) is set while the ETWS notification reception has been already started for another warning type, an error result code is returned.

- Optional parameters <NrRanges>, <MidRangeLow_n> and <MidRangeHigh_n> can be entered only if the <WarningType> parameter is set to 5 or 6.
- The <MidRangeLow_n> and <MidRangeHigh_n> parameters shall be input in decimal format e.g. for mid value 0xa001 the command to be issued is AT+UETWNTFYSTART=5,1,40961,40961.

SARA-U201-63B

- The command is not supported by SARA-U201-63B-00.
- <WarningType> values 5 and 6, as well as the optional parameters <NrRanges>, <MidRangeLow_n> and <MidRangeHigh_n>, are not supported.
- If no <WarningType> has been configured, the read command will return 255.

11.32 Stop ETWS notifications +UETWNTFYSTOP

+UETWNTFYSTOP						
Modules	LARA-R220					
	SARA-U201-63B					
Attributes	**Syntax**	**PIN required**	**Settings saved**	**Can be aborted**	**Response time**	**Error reference**
	full	No	No	No	-	+CME Error

11.32.1 Description

Stops the different ETWS warning notifications.

11.32.2 Syntax

Type	Syntax	Response	Example
Set	AT+UETWNTFYSTOP=<WarningType>	OK	AT+UETWNTFYSTOP=5 OK
Test	AT+UETWNTFYSTOP=?	+UETWNTFYSTOP: (list of the supported <WarningType>s) OK	+UETWNTFYSTOP: (0-6,255) OK

11.32.3 Defined values

Parameter	Type	Description
<WarningType>	Number	Stops the corresponding warning type when used. The following values are allowed and indicates these warning types (see the 3GPP TS 23.041 [9]): • 0: only earthquake • 1: only tsunami • 2: both earthquake and tsunami • 3: test mode • 4: others • 5: MSG ID range list for non-test Message Identifiers • 6: MSG ID range list for Test Message Identifiers • 255: stops the ETWS warning reception for all warning type values

11.32.4 Notes

SARA-U201-63B

- The command is not supported by SARA-U201-63B-00.

12 Supplementary services

12.1 Introduction

Supplementary services (SS) allow to configure how the incoming or mobile originated voice calls are handled. Cellular standards provide call related supplementary services (CRSS), that operate on calls while they are active (e.g. performing call hold or merge of calls in a multi-party conversation), and others that imply a signalling session with the mobile network to perform query and set of the specific supplementary service (e.g. call barring or call forwarding). Unstructured Supplementary Services Data (USSD) are mobile terminated or originated signalling transactions, where a binary string is transmitted to the network to retrieve information on the subscription (e.g. residual credit) or sent from the NW to notify the subscriber of specific events.

On VoLTE capable modules, supplementary services operate on VoLTE calls in the same way they work on legacy speech calls. Query and set of supplementary services are performed via XCAP (XML Configuration Access Protocol), that is an HTTP-based service that uses a specific default EPS bearer on a specific XCAP APN (see +UIMSCFG, XCAP_APN value of <ImsConfig> parameter) to accomplish the query or the update of the SS. Usually supplementary services via XCAP require IMS registration to be performed; if the device has not yet successfully completed IMS registration, the SS is carried out via CSFB if 2G or 3G RAT is supported. USSD via IMS are not supported on VoLTE capable modules and are carried out via CSFB if 2G or 3G RAT is supported.

☞ LARA-R202 / TOBY-R200
On 2G and 3G networks, the supplementary services can be sent only if the network support XCAP, either via an IMS context or CS domain.

☞ LARA-R202 / LARA-R203 / TOBY-R200
On LTE networks, if the IMS is not yet available, the request will be routed to the CS domain on LTE.

☞ LARA-R202
Supplementary services performed via XCAP do not require the module to be IMS registered.

12.2 Call forwarding +CCFC

+CCFC						
Modules	TOBY-L4 TOBY-L2 MPCI-L2					
	LARA-R202 LARA-R203 LARA-R211 LARA-R280 TOBY-R2					
	SARA-U2 LISA-U2 LISA-U1					
	SARA-G3 LEON-G1					
Attributes	**Syntax**	**PIN required**	**Settings saved**	**Can be aborted**	**Response time**	**Error reference**
	full	Yes	No	Yes	Up to 3 min	+CME Error

12.2.1 Description

Controls the call forwarding supplementary service. Registration, erasure, activation, deactivation and status query are supported.

12.2.2 Syntax

Type	Syntax	Response	Example
Set	AT+CCFC=<reason>,<mode>[,<number>[,<type>[,<class>[,<subaddr>[,<satype>[,<time>]]]]]]	OK or when <mode>=2 +CCFC: <status>,<class1>[,<number>,<type> [,<subaddr>, <satype>[,<time>]]] [+CCFC: <status>,<class2> [,<number>, <type>[,<subaddr>, <satype>[,<time>]]]] OK	**Registration:** AT+CCFC=0,3,"01711234" OK **Query status:** AT+CCFC=2,2 +CCFC: 1,1,"+3945112",145,"",,60 OK

Type	Syntax	Response	Example
Test	AT+CCFC=?	+CCFC: (list of supported <reason>s) OK	+CCFC: (0-5) OK

12.2.3 Defined values

Parameter	Type	Description
<reason>	Number	• 0: unconditional • 1: mobile busy • 2: no reply • 3: not reachable • 4: all call forwarding • 5: all conditional call forwarding
<mode>	Number	• 0: disable • 1: enable • 2: query status • 3: registration • 4: erasure
<number>	String	Phone number of forwarding address in <type> format
<type>	Number	Type of address; default 145 when dialling string includes '+', otherwise 129
<subaddr>	String	Subaddress; parameter currently ignored after syntax check
<satype>	Number	Type of subaddress; default 128 (TON/NPI unknown); parameter currently ignored after syntax check
<classx>	Number	Sum of Numbers each representing a class of information (default 7 - voice (1), data (2) and FAX (4) - or interpreted by network if not explicitly entered): • 1: voice • 2: data • 4: FAX • 8: SMS • 16: data circuit sync • 32: data circuit async • 64: dedicated packet access • 128: dedicated PAD access
<time>	Number	Time in seconds to wait before call is forwarded (default 60), but only when <reason>=2 (no reply) is enabled; the range goes from 5 to 30 s
<status>	Number	• 0: not active • 1: active

12.2.4 Notes

- When querying the status of a network service (<mode>=2) the response line for "not active" case (<status>=0) is returned only if the service is not active for any <class>. Hence when querying the status of a network service (<mode>=2) asking for a specific <class>, the DUT sends a generic request instead.

TOBY-L2

- In some cases on voice capable devices, it is not possible to disable call forwarding <reason> by means of <mode>=0. In this case use <mode>=4.

TOBY-L210-62S

- The set command is not allowed if the VoLTE service is not available.

TOBY-L210-60S

- The set command is not allowed.

12.3 Call waiting +CCWA

+CCWA						
Modules	TOBY-L4 TOBY-L200 TOBY-L201 TOBY-L210-00S TOBY-L210-02S TOBY-L210-03A TOBY-L210-03S TOBY-L210-60S TOBY-L220 TOBY-L280 MPCI-L2					
	LARA-R202 LARA-R203 LARA-R211 LARA-R280 TOBY-R2					
	SARA-U2 LISA-U2 LISA-U1					
	SARA-G3 LEON-G1					
Attributes	**Syntax**	**PIN required**	**Settings saved**	**Can be aborted**	**Response time**	**Error reference**
	partial	Yes	No	Yes	Up to 3 min	+CME Error

12.3.1 Description

Controls the Call Waiting supplementary service according to 3GPP TS 22.083 [33]. The activation, deactivation and status query are supported. When querying the status of a network service (<mode>=2) the information text response for 'not active' case (<status>=0) should be returned only if the service is not active for any <class>. Instead when querying the status of a network service (<mode>=2) asking for a specific <class>, the DUT sends a generic request.

It is possible to abort the status query sending a character to the DCE during the command execution. If enabled by <n> a URC is presented on TE when a call is signalled.

12.3.2 Syntax

Type	Syntax	Response	Example
Set	AT+CCWA=[<n>[,<mode>[,<class>]]]	OK	AT+CCWA=1,1,32 OK
	AT+CCWA=[<n>[,<mode>]]	+CCWA: <status>,<class1> [+CCWA: <status>,<class2> [...]] OK	AT+CCWA=1,2 +CCWA: 1,1 +CCWA: 1,4 +CCWA: 1,16 +CCWA: 1,32 OK
Read	AT+CCWA?	+CCWA: <n> OK	+CCWA: 0 OK
Test	AT+CCWA=?	+CCWA: (list of supported <n>s) OK	+CCWA: (0-1) OK
URC		+CCWA: <number>,<type>,<class>,[<alpha>][,<CLI validity>[,<subaddr>,<satype>[,<priority>]]]	+CCWA: "+393290286612",145,1,,0

12.3.3 Defined values

Parameter	Type	Description
<n>	Number	URC configuration: • 0 (default value): disabled • 1: enabled
<mode>	Number	If <mode> is not set, none request is sent to the network: • 0: disabled • 1 (default value): enabled • 2: query status
<classx>	Number	Sum of numbers each representing an information class: • 1: voice • 2: data; it comprises all those <classx> values between 16 and 128, that are supported both by the network and the MS. This means, a setting made for <classx> to 2 applies to all remaining data classes (if supported). In addition, it is possible to assign a different setting to a specific class. For example, call waiting can be deactivated only for a specific data class. To understand which classes were actually activated AT+CCWA=1,2 command should be executed

Parameter	Type	Description
		• 4: FAX • 8: SMS • 16: data circuit sync • 32: data circuit async • 64: dedicated packet access • 128: dedicated PAD access If <classx> is not set and <mode> is 0 or 1 the default value is 3 The default value is 255 if <classx> is not set and <mode> is 2 e.g. it reports all active classes if any. If no class is active only classes 1 and 2 are reported as inactive: • +CCWA: 0,1 • +CCWA: 0,2
<status>	Number	• 0: not active • 1: active
<number>	String	Phone number of calling address in format specified by <type>
<type>	Number	Type of address
<alpha>	String	Optional string type alphanumeric representation of <number> corresponding to the entry found in phonebook; this parameter is not managed
<CLI validity>	Number	• 0: CLI valid • 1: CLI has been withheld by the originator • 2: CLI is not available
<subaddr>	String	Subaddress of format specified by <satype>
<satype>	Number	Subaddress octet (see the 3GPP TS 24.008 [12] subclause 10.5.4.8)
<priority>	Number	Optional digit type parameter indicating that the eMLPP priority level of the incoming call. The priority level values are as defined in eMLPP specification 3GPP TS 22.067 [59].

12.3.4 Notes

- The call waiting is not handled in uniform mode among all the networks, even if the 3GPP TS 22.004 [3] describes all needed specification: "The applicability of call waiting refers to the telecommunication service of the active call and not of the waiting call. The incoming, waiting, call may be of any kind." Nevertheless, the actual implementation of the service on the networks is different.
- If a sum class is provided in the <classx> parameter the classes will be activated or deactivated in cardinal order (minimum to maximum). If a class is not supported then the procedure ends and any remaining class is not processed. To check which classes were actually activated AT+CCWA=1,2 command should be done.

TOBY-L210-60S

- The set command is not supported.

SARA-G3 / LEON-G1

- If <classx> is not set and <mode> is 0 or 1 the default value is 1.
- if no class is active only class 1 is reported as inactive.

SARA-G4

- If <classx> is not set and <mode> is 0 or 1 the default value is 1.
- If no class is active only class 1 is reported as inactive.
- <classx>= 2, 4, 8, 16, 32, 64 and 128 are not supported.

12.4 Calling line identification restriction +CLIR

+CLIR						
Modules	TOBY-L4 TOBY-L2 MPCI-L2					
	LARA-R202 LARA-R203 LARA-R211 LARA-R280 TOBY-R2					
	SARA-U2 LISA-U2 LISA-U1					
	SARA-G3 LEON-G1					
Attributes	**Syntax**	**PIN required**	**Settings saved**	**Can be aborted**	**Response time**	**Error reference**
	partial	Yes	NVM	Yes	Up to 3 min (<1 s for prompt ">" when present)	+CME Error

12.4.1 Description

Controls the Calling Line Identification Restriction (CLIR) supplementary service (3GPP TS 22.081 [34]). The CLIR subscription, when the temporary mode is provisioned by the network, is overidden as a default adjustment for all following outgoing calls (3GPP TS 22.081 [34] specifies how the network will act).

12.4.2 Syntax

Type	Syntax	Response	Example
Set	AT+CLIR=[<n>]	OK	AT+CLIR=2 OK
Read	AT+CLIR?	+CLIR: <n>,<m> OK	+CLIR: 0,2 OK
Test	AT+CLIR=?	+CLIR: (list of supported <n>s) OK	+CLIR: (0-2) OK

12.4.3 Defined values

Parameter	Type	Description
<n>	Number	Sets the adjustment for outgoing calls: • 0 (factory-programmed value): presentation indicator is used according to the subscription of the CLIR service • 1: CLIR invocation • 2: CLIR suppression
<m>	Number	Shows the subscriber CLIR status in the network: • 0: CLIR not provisioned • 1: CLIR provisioned in permanent mode • 2: unknown • 3: CLIR temporary mode presentation restricted • 4: CLIR temporary mode presentation allowed

12.4.4 Notes

TOBY-L210-62S

- The set and read commands are not allowed if the VoLTE service is not available (see +CIREG AT command).

TOBY-L210-60S

- The set and read commands are not supported.

SARA-U2 / LISA-U2 / LISA-U1 / SARA-G3 / LEON-G1

- The command setting is not stored in the NVM.

12.5 Calling line identification presentation +CLIP

+CLIP						
Modules	TOBY-L4 TOBY-L2 MPCI-L2					
	LARA-R202 LARA-R203 LARA-R211 LARA-R280 TOBY-R2					
	SARA-U2 LISA-U2 LISA-U1					
	SARA-G3 LEON-G1					
Attributes	**Syntax**	**PIN required**	**Settings saved**	**Can be aborted**	**Response time**	**Error reference**
	full	Yes	No	Yes	Up to 3 min (<1 s for prompt ">" when present)	+CME Error

12.5.1 Description

Controls the Calling Line Identification Presentation (CLIP) supplementary service, but it has no effect on the execution of CLIP service in the network. When the CLI (Calling Line Identification) is enabled, the command response is returned after every RING result code. The URC is displayed after RING if the CLI presentation at the TE is enabled.

12.5.2 Syntax

Type	Syntax	Response	Example
Set	AT+CLIP=[<n>]	OK	AT+CLIP=1 OK
Read	AT+CLIP?	+CLIP: <n>,<m> OK	+CLIP: 0,2 OK
Test	AT+CLIP=?	+CLIP: (list of supported <n>s) OK	+CLIP: (0-1) OK
URC		+CLIP: <number>,<type>[,<subaddr>,<satype>[,<alpha>[,<CLI validity>]]]	

12.5.3 Defined values

Parameter	Type	Description
<n>	Number	Optional parameter sets/shows the result code presentation in the TA: • 0 (default value): disable • 1: enable
<m>	Number	Shows the subscriber CLIP service status in the network • 0: CLIP not provisioned • 1: CLIP provisioned • 2: unknown
<number>	String	Phone number of calling address in format specified by <type>.
<type>	Number	Type of address octet.
<subaddr>	String	Subaddress of format specified by <satype>.
<satype>	Number	Type of subaddress octet.
<alpha>	String	Optional string type alphanumeric representation of <number> corresponding to the entry found in phonebook; the parameter is not managed.
<CLI validity>	Number	• 0: CLI valid • 1: CLI has been withheld by the originator • 2: CLI is not available

12.5.4 Notes

- When CLI is not available (<CLI validity>=2), the <number> parameter shall be an empty string ("") and <type> value will not be significant. Nevertheless, the TA may return the recommended value 128 for <type> (TON/NPI unknown). When CLI has been withheld by the originator, (<CLI validity>=1) and the CLIP is provisioned with the "override category" option (see the 3GPP TS 22.081 [34] and 3GPP TS 23.081 [35]), <number> and <type> is provided. Otherwise, TA shall return the same setting for <number> and <type> as if the CLI was not available.

TOBY-L210-62S

- The set and read commands are not allowed if the VoLTE service is not available (see +CIREG AT command).

TOBY-L210-60S

- The set and read commands are not supported.

12.6 Connected line identification presentation +COLP

+COLP						
Modules	TOBY-L4 TOBY-L2 MPCI-L2					
	LARA-R2 TOBY-R2					
	SARA-U2 LISA-U2 LISA-U1					
	SARA-G3 LEON-G1					
Attributes	**Syntax**	**PIN required**	**Settings saved**	**Can be aborted**	**Response time**	**Error reference**
	full	Yes	No	Yes	< 20 s	+CME Error

12.6.1 Description

Controls the COnnected Line identification Presentation (COLP) supplementary service (see the 3GPP TS 22.081 [34]), useful in case of call forwarding of the connected line. It enables a calling subscriber to get the connected line identity (COL) of the called party, after setting up a mobile originated call. The command enables or disables the presentation of the COL at the TE. It has no effect on the execution of the supplementary service COLR in the network.

When enabled (and called subscriber allows), the IRC is sent from TA to TE before any +CR or V.25ter responses.

The read command provides the <n> status, and also triggers an interrogation of the provision status of the COLP service according 3GPP TS 22.081 [34] (given in <m>).

12.6.2 Syntax

Type	Syntax	Response	Example
Set	AT+COLP=[<n>]	OK	AT+COLP=1 OK
Read	AT+COLP?	+COLP: <n>,<m> OK	+COLP: 0,2 OK
Test	AT+COLP=?	+COLP: (list of supported <n>s) OK	+COLP: (0-1) OK
IRC		+COLP: <number>,<type>[,<subaddr>,<satype>[,<alpha>]]	

12.6.3 Defined values

Parameter	Type	Description
<n>	Number	Optional parameter sets/shows the result code presentation status to the TE: • 0 (default value): disable • 1: enable
<m>	Number	Shows the subscriber COLP status in the network: • 0: COLP not provisioned • 1: COLP provisioned • 2: unknown (e.g. no network, etc.)
<number>, <type>, <subaddr>, <satype>, <alpha>		See +CLIP.

12.6.4 Notes

TOBY-L210-60S

- The set and read commands are not supported.

12.7 Connected line identification restriction +COLR

+COLR						
Modules	TOBY-L4 TOBY-L2 MPCI-L2					
	LARA-R2 TOBY-R2					
	SARA-U2 LISA-U2 LISA-U1					
	SARA-G3 LEON-G1					
Attributes	**Syntax**	**PIN required**	**Settings saved**	**Can be aborted**	**Response time**	**Error reference**
	full	Yes	No	Yes	< 20 s	+CME Error

12.7.1 Description

Refers to the COnnected Line identification Restriction (COLR) supplementary service that enables the connected party to prevent presentation of its line identity to the calling party. According to 3GPP TS 22.081 [34] the activation and deactivation of COLR is only a result of provision / withdrawal. The command allows only the interrogation of the current state of COLR service in the network. The set syntax is not allowed.

12.7.2 Syntax

Type	Syntax	Response	Example
Read	AT+COLR?	+COLR: <status>	+COLR: 2
		OK	OK
Test	AT+COLR=?	OK	

12.7.3 Defined values

Parameter	Type	Description
<status>	Number	Shows the subscriber COLR service status in the network: • 0: COLR not provisioned • 1: COLR provisioned • 2: unknown

12.7.4 Notes

TOBY-L4 / LARA-R2 / TOBY-R2

- The read command is not allowed. The set (action) syntax AT+COLR must be used instead: the set command has no effect on the execution of the supplementary services COLR in the network; it only triggers an interrogation of the activation status of the COLR supplementary service. The syntax of the information text response is unchanged (+COLR: <status>).

TOBY-L210-60S

- The read command is not supported.

12.8 Advice of charge +CAOC

+CAOC						
Modules	TOBY-L4 TOBY-L200 TOBY-L201 TOBY-L210-00S TOBY-L210-02S TOBY-L210-03A TOBY-L210-03S TOBY-L220 TOBY-L280 MPCI-L2					
	LARA-R202 LARA-R203 LARA-R211 LARA-R280 TOBY-R2					
	SARA-U2 LISA-U2 LISA-U1					
	SARA-G3 LEON-G1					
Attributes	**Syntax**	**PIN required**	**Settings saved**	**Can be aborted**	**Response time**	**Error reference**
	partial	Yes	No	No	< 10 s	+CME Error

12.8.1 Description

Allows the subscriber to get the information about the call costs in home units using the advice of charge supplementary service (3GPP TS 22.024 [37] and 3GPP TS 22.086 [36]). If it is enabled, the TE periodically receives the URC containing the corresponding information.

12.8.2 Syntax

Type	Syntax	Response	Example
Set	AT+CAOC[=<mode>]	[+CAOC: <ccm>] OK	AT+CAOC=0 OK
Read	AT+CAOC?	+CAOC: <mode> OK	+CAOC: 1 OK
Test	AT+CAOC=?	+CAOC: (list of supported <mode>s) OK	+CAOC: (0-2) OK
URC		+CCCM: <ccm>	

12.8.3 Defined values

Parameter	Type	Description
<mode>	Number	• 0: queries the CCM value • 1: deactivates the unsolicited reporting of CCM value • 2: activates the unsolicited reporting of CCM value
<ccm>	Number	Current call meter indicated as a string in hexadecimal format

12.8.4 Notes

TOBY-L210-62S

- The set command is not allowed if the VoLTE service is not available.

TOBY-L210-60S

- The set command is not allowed.

LISA-U200-01S / LISA-U230 / LISA-U260-01S / LISA-U270-01S / LISA-U1 / LEON-G100-06S

- If the SIM card does not support the AoC, the CCM value is not updated and no URC is displayed.

12.9 Accumulated call meter +CACM

+CACM						
Modules	TOBY-L4 TOBY-L200 TOBY-L201 TOBY-L210 TOBY-L220-02S TOBY-L280 MPCI-L200 MPCI-L201 MPCI-L210 MPCI-L220-02S MPCI-L280					
	LARA-R2 TOBY-R2					
	SARA-U2 LISA-U2 LISA-U1					
	SARA-G3 LEON-G1					
Attributes	**Syntax**	**PIN required**	**Settings saved**	**Can be aborted**	**Response time**	**Error reference**
	full	No	No	No	< 10 s	+CME Error

12.9.1 Description

Resets the advice of charge related accumulated call meter value in the SIM file EF_{ACM}. The ACM contains the total number of home units for both the current and preceding calls. The SIM PIN2 is required to reset the value.

☞ If the EF is not available, the read command returns +CME ERROR: SIM failure (verbose result code).

12.9.2 Syntax

Type	Syntax	Response	Example
Set	AT+CACM=[<passwd>]	OK	AT+CACM="0933" OK
Read	AT+CACM?	+CACM: <acm> OK	+CACM: "000000" OK
Test	AT+CACM=?	OK	

12.9.3 Defined values

Parameter	Type	Description
<passwd>	String	SIM PIN2 as string type
<acm>	String	Accumulated call meter value similarly coded as <ccm> under +CAOC

12.9.4 Notes

- The command needs the SIM module to work correctly

12.10 Call meter maximum event +CCWE

+CCWE						
Modules	TOBY-L4 TOBY-L200-02S TOBY-L200-03A TOBY-L200-03S TOBY-L210-02S TOBY-L210-03A TOBY-L210-03S TOBY-L210-62S TOBY-L220-02S TOBY-L280 MPCI-L200-02S MPCI-L200-03S MPCI-L210-02S MPCI-L210-03S MPCI-L220-02S MPCI-L280					
	LARA-R202 LARA-R203 LARA-R211 LARA-R280 TOBY-R2					
	SARA-U2 LISA-U2 LISA-U1					
	SARA-G3 LEON-G1					
Attributes	**Syntax**	**PIN required**	**Settings saved**	**Can be aborted**	**Response time**	**Error reference**
	full	No	No	No	-	+CME Error

12.10.1 Description

Allows sending the +CCWV URC to the DTE, when enabled. The URC syntax is: **+CCWV**. The warning is issued when approximately 30 s call time remains. It is also sent when starting a call if less than 30 s call time remains.

12.10.2 Syntax

Type	Syntax	Response	Example
Set	AT+CCWE=<mode>	OK	AT+CCWE=1 OK
Read	AT+CCWE?	+CCWE: <mode> OK	+CCWE: 0 OK
Test	AT+CCWE=?	+CCWE: (list of supported <mode>s) OK	+CCWE: (0-1) OK
URC		+CCWV	

12.10.3 Defined values

Parameter	Type	Description
<mode>	Number	• 0: call meter warning event disabled • 1: call meter warning event enabled

12.11 Accumulated call meter maximum +CAMM

+CAMM						
Modules	TOBY-L4 TOBY-L200 TOBY-L201 TOBY-L210 TOBY-L220-02S TOBY-L280 MPCI-L200 MPCI-L201 MPCI-L210 MPCI-L220-02S MPCI-L280					
	LARA-R2 TOBY-R2					
	SARA-U2 LISA-U2 LISA-U1					
	SARA-G3 LEON-G1					
Attributes	**Syntax**	**PIN required**	**Settings saved**	**Can be aborted**	**Response time**	**Error reference**
	full	No	No	No	< 10 s	+CME Error

12.11.1 Description

Sets the advice of charge related accumulated call meter maximum value in the SIM file EF_{ACMmax}. The ACMmax contains the maximum number of home units allowed to be consumed by the subscriber. When the ACM reaches ACMmax, the calls are prohibited. The SIM PIN2 is required to set the value.

If the EF is not available, the read command returns +CME ERROR: SIM failure (verbose result code).

12.11.2 Syntax

Type	Syntax	Response	Example
Set	AT+CAMM=[<acmmax>[,<passwd>]]	OK	AT+CAMM="000300","0933" OK
Read	AT+CAMM?	+CAMM: <acmmax> OK	+CAMM: "000300" OK
Test	AT+CAMM=?	OK	

12.11.3 Defined values

Parameter	Type	Description
<acmmax>	String	Contains the accumulated call meter maximum value similarly coded as <ccm> under +CAOC; value zero disables the ACMmax feature
<passwd>	String	Contains SIM PIN2

12.11.4 Notes

- The command needs the SIM module to work correctly

12.12 Price per unit and currency table +CPUC

+CPUC						
Modules	TOBY-L4 TOBY-L2 MPCI-L2					
	LARA-R2 TOBY-R2					
	SARA-U2 LISA-U2 LISA-U1					
	SARA-G3 LEON-G1					
Attributes	**Syntax**	**PIN required**	**Settings saved**	**Can be aborted**	**Response time**	**Error reference**
	full	No	No	No	< 10 s	+CME Error

12.12.1 Description

Sets the parameters of advice of charge related price per unit and the currency table in the SIM file EF_{PUCT}. The PUCT information can be used to convert the home units into the currency units. The PIN2 is required to set the parameters.

If the EF is not available, the read command returns +CME ERROR: SIM failure (verbose result code).

12.12.2 Syntax

Type	Syntax	Response	Example
Set	AT+CPUC=<currency>,<ppu>[,<passwd>]	OK	AT+CPUC="USD","0.20","0933" OK
Read	AT+CPUC?	+CPUC: <currency>,<ppu> OK	+CPUC: "USD","0.20" OK
Test	AT+CPUC=?	OK	

12.12.3 Defined values

Parameter	Type	Description
<currency>	String	Contains the three-character currency code (e.g. "GBP", "EUR")
<ppu>	String	Contains the price per unit; the dot is used as a decimal separator
<passwd>	String	Contains SIM PIN2

12.13 Call related supplementary services +CHLD

+CHLD						
Modules	TOBY-L4 TOBY-L200 TOBY-L201 TOBY-L210 TOBY-L220-02S TOBY-L280 MPCI-L200 MPCI-L201 MPCI-L210 MPCI-L220-02S MPCI-L280					
	LARA-R202 LARA-R203 LARA-R211 LARA-R280 TOBY-R2					
	SARA-U2 LISA-U2 LISA-U1					
	SARA-G3 LEON-G1					
Attributes	**Syntax**	**PIN required**	**Settings saved**	**Can be aborted**	**Response time**	**Error reference**
	partial	Yes	No	No	< 20 s	+CME Error

12.13.1 Description

Call hold and multiparty conversation (conference call). The calls can be put on hold, recovered, released or added to the conversation.

The expected response time depends on the number of calls manipulated by the command (the current value refers to the manipulation of one call): in case of poor radio quality, disconnect, hold and retrieve procedures triggered by the command might require several retransmissions at radio level, thus the expected response time shall be extended accordingly.

12.13.2 Syntax

Type	Syntax	Response	Example
Set	AT+CHLD=[<n>]	OK	AT+CHLD=2 OK
Test	AT+CHLD=?	+CHLD: (list of supported <n>s) OK	+CHLD: (0,1,1x,2,2x,3,4,4*,6,7,8) OK

12.13.3 Defined values

Parameter	Type	Description
<n>	Number	• 0: release all the held calls or set User Determined User Busy for a waiting call; if both exists then only the waiting call will be rejected • 1: release all the active calls and accepts the other (held or waiting) • 1x: release a specific call (x specific call number as indicated by +CLCC) • 2: place all the active calls (if exist) on hold and accepts the other call (held or waiting, if exist) • 2x: place all the active calls on hold except the call x with which communication is supported • 3: adds a held call to the conversation • 4: connects the two calls and disconnects the subscriber from both calls (Explicit Call Transfer) • 4*: call deflection (proprietary feature) • 5: call completion of busy subscriber; this command syntax will be interpreted as an activation request, if the network has previously offered the possibility to activate this function • 6: puts an active call on hold or an held call to active • 7: disconnect the users in multiparty without accepting incoming call • 8: release all the calls (active and held)

12.13.4 Notes

TOBY-L2 / MPCI-L2

- The <n> parameter cannot be set to 4*.
- The <n> parameter is mandatory.

TOBY-L210-62S

- <n>=2 and 2x are not supported if the VoLTE service is not available (see +CIREG AT command).

TOBY-L210-60S

- The set command is not supported.

LEON-G100-06S

- In the set command the '=' character is not mandatory.

12.14 Call deflection +CTFR

+CTFR						
Modules	TOBY-L4 TOBY-L200 TOBY-L201 TOBY-L210 TOBY-L220-02S TOBY-L280 MPCI-L200 MPCI-L201 MPCI-L210 MPCI-L220-02S MPCI-L280					
	LARA-R2 TOBY-R2					
	SARA-U2 LISA-U2 LISA-U1					
	SARA-G3 LEON-G1					
Attributes	**Syntax**	**PIN required**	**Settings saved**	**Can be aborted**	**Response time**	**Error reference**
	full	Yes	No	No	Up to 3 min	+CME Error

12.14.1 Description

Allows the MT user to respond to an incoming call offered by the network by requesting call deflection, i.e. redirection of this call to another number specified in the response. The call deflection is a supplementary service applicable only to voice calls (teleservice 11).

12.14.2 Syntax

Type	Syntax	Response	Example
Set	AT+CTFR=<number>[,<type>[,<subaddr>[,<satype>]]]	OK	AT+CTFR="09113788" OK
Test	AT+CTFR=?	OK	

12.14.3 Defined values

Parameter	Type	Description
<number>	String	Phone number
<type>	Number	Type of address; default 145 when dialling string includes '+', otherwise 129
<subaddr>	String	Subaddress; parameter currently ignored after syntax check
<satype>	Number	Type of subaddress; default 128 (TON/NPI unknown); parameter currently ignored after syntax check

12.14.4 Notes

TOBY-L210-60S

- The set command is not supported.

SARA-U2 / LISA-U2 / LISA-U1 / SARA-G3 / LEON-G1

- <type>, <subaddr>, <satype> parameters are not supported.

12.15 Supplementary service notifications +CSSN

+CSSN						
Modules	TOBY-L4 TOBY-L2 MPCI-L2					
	LARA-R2 TOBY-R2					
	SARA-U2 LISA-U2 LISA-U1					
	SARA-G3 LEON-G1					
Attributes	**Syntax**	**PIN required**	**Settings saved**	**Can be aborted**	**Response time**	**Error reference**
	full	No	No	No	-	+CME Error

12.15.1 Description

Refers to supplementary service related network initiated notifications. When <n>=1 and a supplementary service notification is received after a mobile originated call setup, the IRC is sent before any other Mobile Originated call setup result codes. When <m>=1 and a supplementary service notification is received during a call, the URC is sent.

12.15.2 Syntax

Type	Syntax	Response	Example
Set	AT+CSSN=[<n>[,<m>]]	OK	AT+CSSN=0,0 OK
Read	AT+CSSN?	+CSSN: <n>,<m> OK	+CSSN: 0,0 OK
Test	AT+CSSN=?	+CSSN: (list of supported <n>s),(list of supported <m>s) OK	+CSSN: (0-1),(0-1) OK
IRC		+CSSI: <code1>[,<index>]	+CSSI: 4,1
URC		+CSSU: <code2>[,<index>[,<number>,<type>[,<subaddr>,<satype>]]]	+CSSU: 0

12.15.3 Defined values

Parameter	Type	Description
<n>	Number	Sets/shows the +CSSI result code presentation status • 0: disabled (default value) • 1: enabled
<m>	Number	Sets/shows the +CSSU result code presentation status • 0: disabled (default value) • 1: enabled
<code1>	Number	• 0: unconditional call forwarding is active • 1: some of the conditional call forwardings are active • 2: call has been forwarded • 3: call is waiting • 4: this is a CUG call (<index> parameter is provided) • 5: outgoing calls are barred • 6: incoming calls are barred • 7: CLIR suppression rejected • 8: calls has been deflected
<index>	Number	Refer +CCUG (Chapter 12.18)
<code2>	Number	• 0: this is a forwarded call (MT call setup) • 1: this is a CUG call (<index> parameter is provided) (MT call setup) • 2: call has been put on hold (during a voice call) • 3: call has been retrieved (during a voice call) • 4: multiparty call entered (during a voice call) • 5: call on hold has been released - this is not an SS notification - (during a voice call) • 6: forward check SS message received (can be received whenever) • 7: call is being connected (alerting) with the remote party in alerting state in explicit call transfer operation (during a voice call) • 8: call has been connected with the other remote party in explicit call transfer operation (during a voice call or MT call setup) • 9: this is a deflected call (MT call setup) • 10: additional incoming call forwarded
<number>	String	Phone number, format specified by <type>
<type>	Number	Type of address octet
<subaddr>, <satype>	String	Not used

12.15.4 Notes

TOBY-L210-60S

- The set command is not supported.

12.16 User to user signalling service 1 +CUUS1

+CUUS1						
Modules	TOBY-L2 MPCI-L2					
	SARA-G3 LEON-G1					
Attributes	**Syntax**	**PIN required**	**Settings saved**	**Can be aborted**	**Response time**	**Error reference**
	full	Yes	No	No	-	+CME Error

12.16.1 Description

Allows the control of the User-to-User Signalling Supplementary Sevice 1 (UUS1) according to 3GPP TS 22.087 [29]. Parameters <message> and <UUIE> are used to activate/deactivate the implicit request of the User-to-User Signalling Supplementary Service 1. When <message> and <UUIE> are both present the string specified in <UUIE> is included as the value part of the User-to-User Information Element (as defined in 3GPP TS 24.008 [12]) into all subsequent messages of type <message>. If parameter <message> is present but parameter <UUIE> is not present then the User-to-User Information Element shall not be present in subsequent messages of type <message>.

<n> and <m> parameters are used to enable/disable the presentation of incoming User-to-User Information Elements. When <n>=1 and a User-to-User Information is received after a mobile originated call setup or after hanging up a call, IRC +CUUS1I: <message>,<UUIE> is sent to the DTE.

When <m>=1 and a User-to-User Information is received during a mobile terminated call setup or during a remote party call hangup, URC **+CUUS1U: <messageU>,<UUIE>** is sent to the DTE.

12.16.2 Syntax

Type	Syntax	Response	Example
Set	AT+CUUS1=[<n>[,<m>[,<message>[,<UUIE>[,<message>[,<UUIE>[,...]]]]]]]	OK	AT+CUUS1=1,1,1,"7E0005123456" OK
Read	AT+CUUS1?	+CUUS1: <n>,<m>[,<message>,<UUIE> [,<message>,<UUIE>[,...]]] OK	+CUUS1: 0,0 OK
Test	AT+CUUS1=?	+CUUS1: (list of supported <n>s), (list of supported <m>s), (list of supported <message>s), (list of supported <messageI>s),(list of supported <messageU>s) OK	+CUUS1: (0,1),(0,1),(0-6),(0-4),(0-3) OK
IRC		+CUUS1I: <messageI>,<UUIE>	
URC		+CUUS1U: <messageU>,<UUIE>	

12.16.3 Defined values

Parameter	Type	Description
<n>	Number	Sets/shows the +CUUS1I result code presentation status in the MT • 0: disable • 1: enable
<m>	Number	Sets/shows the +CUUS1U result code presentation status in MT • 0: disable • 1: enable
<message>	Number	Type of message containing the outgoing User-to-User Information Element • 0: ANY • 1: SETUP • 2: ALERT • 3: CONNECT • 4: DISCONNECT • 5: RELEASE • 6: RELEASE_COMPLETE

Parameter	Type	Description
<messagel>	Number	Type of message containing the intermediate User-to-User Information Element • 0: ANY • 1: ALERT • 2: PROGRESS • 3: CONNECT (sent after +COLP if enabled) • 4: RELEASE
<messageU>	Number	Type of message containing the unsolicited User-to-User Information Element • 0: ANY • 1: SETUP (returned after +CLIP if presented, otherwise after every RING or +CRING (see the +CRC AT command)) • 2: DISCONNECT • 3: RELEASE_COMPLETE
<UUIE>	Number	The User-to-User Information Element (as defined in 3GPP TS 24.008 [12]) in hexadecimal character format (for hexadecimal format, see the +CSCS AT command).

12.16.4 Notes

- If the MT does not distinguish the type of message containing the User-to-User Information Element, it can use the value for ANY message.

TOBY-L210-60S

- The set command is not supported.

12.17 Unstructured supplementary service data +CUSD

+CUSD						
Modules	All products					
Attributes	**Syntax**	**PIN required**	**Settings saved**	**Can be aborted**	**Response time**	**Error reference**
	full	Yes	No	Yes	Up to 3 min	+CME Error

12.17.1 Description

Control of Unstructured Supplementary Service Data (USSD) is according to 3GPP TS 22.090 [6]. Both network and mobile initiated operations are supported. The parameter <n> disables/enables the URC presentation. Value <n>=2 is used to cancel an ongoing USSD session. When <str> is given, a mobile initiated USSD-string or a response USSD-string to a network initiated operation is sent to the network. The response USSD-string from the network is returned in the URC +CUSD indicated above.

12.17.2 Syntax

Type	Syntax	Response	Example
Set	AT+CUSD=[<n>[,<str>[,<dcs>]]]	[+CUSD: <m>[,<str>,<dcs>]] OK	AT+CUSD=1,"*100#",15 +CUSD: 2,"Residual credit: 7,87 Euro",15 OK
Read	AT+CUSD?	+CUSD: <n> OK	+CUSD: 0 OK
Test	AT+CUSD=?	+CUSD: (list of supported <n>s) OK	+CUSD: (0-2) OK
URC		+CUSD: <m>[,<str>,<dcs>]	

12.17.3 Defined values

Parameter	Type	Description
<n>	Number	• 0 (default value): result code presentation disabled • 1: result code presentation enabled • 2: session cancelled (not applicable to the read command response)

Parameter	Type	Description
<str>	String	USSD-string converted in the current character set in use (see the +CSCS command)
<dcs>	Number	Data coding scheme (see 3GPP TS 23.038 [7]) used for sending the USSD string. 1 byte in decimal format; valid values are 0-255. The default value is 15.
<m>	Number	• 0: no further user action required • 1: further user action required • 2: USSD termination by network • 4: operation not supported • 5: network time out

12.17.4 Notes

- Aborting the command is equivalent to send AT+CUSD=2, that ends the current USSD session.
- When issuing a set command with <n>=1, the module waits for SS transaction to finish before issuing the final result code (e.g. "OK").
- After having sent a +CUSD request, it is recommended to refrain from sending another +CUSD request until the URC of the first one has been received.
- On all modules except SARA-U series, when starting a USSD transaction or replying to an incoming USSD, the encoded USSD string cannot exceed 112 bytes; this implies that the input USSD string in e.g. default charset "IRA" (see the +CSCS command) and default coding scheme =15 cannot exceed 128 characters

TOBY-L2 / MPCI-L2 / SARA-U260-00S / SARA-U270-00S / SARA-U270-00X / SARA-U280-00S / LISA-U200-00S / LISA-U200-01S / LISA-U200-02S / LISA-U200-52S / LISA-U200-62S / LISA-U230 / LISA-U260 / LISA-U270 / LISA-U1 / SARA-G4 / SARA-G3 / LEON-G1

- When starting a USSD transaction or replying to an incoming USSD, the encoded USSD string cannot exceed 112 bytes; this implies that the input USSD string in e.g. default charset "IRA" (see the +CSCS command) and default coding scheme =15 cannot exceed 128 characters

TOBY-L2 / MPCI-L2

- When issuing a set command with <n>=1, the "OK" result code is usually returned before the URC (if any) is issued.

TOBY-L210-60S

- The set command is not supported.

12.18 Closed user group +CCUG

+CCUG						
Modules	TOBY-L4 TOBY-L2 MPCI-L2					
	LARA-R2 TOBY-R2					
	SARA-U2 LISA-U2 LISA-U1					
	SARA-G3 LEON-G1					
Attributes	**Syntax**	**PIN required**	**Settings saved**	**Can be aborted**	**Response time**	**Error reference**
	full	Yes	No	No	-	+CME Error

12.18.1 Description

Enables subscribers to form closed user groups to and from which access is restricted (refer to 3GPP TS 22.085 [38]). The command can be used to:

- Activate/deactivate the control of the CUG information for all following calls
- Select a CUG index
- Suppress the outgoing access (OA). The OA allows a member of a CUG to place calls outside the CUG
- Suppress the preferential CUG

12.18.2 Syntax

Type	Syntax	Response	Example
Set	AT+CCUG=[<n>[,<index>[,<info>]]]	OK	AT+CCUG=1,2,1 OK
Read	AT+CCUG?	+CCUG: <n>,<index>,<info>	+CCUG: 0,0,0

Type	Syntax	Response	Example
		OK	OK
Test	AT+CCUG=?	[+CCUG: (list of supported <n>s), (list of supported <index>s),(list of supported <info>s)] OK	+CCUG: (0-1),(0-10),(0-3) OK

12.18.3 Defined values

Parameter	Type	Description
<n>	Number	• 0 (default value): CUG temporary disabled • 1: CUG temporary enabled
<index>	Number	• 0..9: CUG index, (0 default value) • 10: no index (preferred CUG taken from subscriber data)
<info>	Number	• 0: no information (default value) • 1: suppress OA • 2: suppress preferential CUG • 3: suppress OA and preferential CUG

12.18.4 Notes

TOBY-L2 / MPCI-L2

- The response to the test command is "OK".
- If the set command with <n>=0 is sent the read command provides the default values.
- The default value of <index> parameter is 10.

TOBY-L210-60S

- The set command is not supported.

12.19 Calling name presentation +CNAP

+CNAP						
Modules	TOBY-L4 TOBY-L2 MPCI-L2					
	LARA-R2 TOBY-R2					
	SARA-U2 LISA-U2 LISA-U1					
	SARA-G3 LEON-G1					
Attributes	**Syntax**	**PIN required**	**Settings saved**	**Can be aborted**	**Response time**	**Error reference**
	full	Yes	No	Yes	< 20 s	+CME Error

12.19.1 Description

This command refers to the GSM/UMTS supplementary service CNAP (Calling Name Presentation, refer to 3GPP TS 22.096 [39]) that enables a called subscriber to get a calling name indication (CNI) of the calling party when receiving a mobile terminated call. The set command enables or disables the CNI presentation. It has no effect on the execution of the supplementary service CNAP in the network. When the presentation of the CNI is enabled (and CNI is provided), the URC +CNAP: <name>,<CNI_validity> response is returned.

12.19.2 Syntax

Type	Syntax	Response	Example
Set	AT+CNAP=[<n>]	OK	AT+CNAP=0 OK
Read	AT+CNAP?	+CNAP: <n>,<m> OK	+CNAP: 0,2 OK
Test	AT+CNAP=?	+CNAP: (list of supported <n>s) OK	+CNAP: (0-1) OK
URC		+CNAP: <calling_name>[,<CNI_validity>]	+CNAP: "SubscriberName",0

12.19.3 Defined values

Parameter	Type	Description
<n>	Number	Sets the result code presentation • 0: disabled (default value) • 1: enabled
<m>	Number	Subscriber CNAP service status in the network • 0: CNAP not provisioned • 1: CNAP provisioned • 2: unknown
<calling_name>	String	Calling party name
<CNI_validity>	Number	• 0: name presentation allowed • 1: presentation restricted • 2: name unavailable • 3: name presentation restricted

12.19.4 Notes

TOBY-L210-60S

- The set and read commands are not supported.

12.20 eMLPP priority registration and interrogation +CAEMLPP

+CAEMLPP						
Modules	SARA-U201 SARA-U260-03S SARA-U270-03A SARA-U270-03S SARA-U270-04B SARA-U270-53S SARA-U270-73S SARA-U280-03S LISA-U200-03S LISA-U200-83S LISA-U201					
Attributes	**Syntax**	**PIN required**	**Settings saved**	**Can be aborted**	**Response time**	**Error reference**
	full	Yes	No	No	< 20 s	+CME Error

12.20.1 Description

Changes the default priority level of the user in the network. The requested priority level is checked against the eMLPP subscription of the user stored on the SIM card in EF_{eMLPP} (see the 3GPP TS 51.011 [18] and 3GPP TS 31.102 [19]). If the user does not have subscription for the requested priority level an error result code is returned. The read command triggers an interrogation of the provision of the maximum priority level which the service subscriber is allowed to use and default priority level activated by the user. If the service is not provisioned, a result code including the SS-Status parameter is returned.

12.20.2 Syntax

Type	Syntax	Response	Example
Set	AT+CAEMLPP=<priority>	OK	AT+CAEMLPP=1 OK
Read	AT+CAEMLPP?	+CAEMLPP: <default_priority>, <max_priority> OK	
Test	AT+CAEMLPP=?	OK	OK

12.20.3 Defined values

Parameter	Type	Description
<priority>	Number	Indicates the default eMLPP priority level priority level to be activated in the network. The priority level values are defined in eMLPP specification 3GPP TS 22.067 [59]
<default_priority>	Number	Indicates the default eMLPP priority level priority level which is activated in the network. The priority level values are defined in eMLPP specification 3GPP TS 22.067 [59]

Parameter	Type	Description
<max_priority>	Number	Indicates the maximum eMLPP priority level for which the service subscriber has a subscription in the network. The priority level values are defined in eMLPP specification 3GPP TS 22.067 [59]

12.21 eMLPP subscriptions +CPPS

+CPPS						
Modules	SARA-U201 SARA-U260-03S SARA-U270-03A SARA-U270-03S SARA-U270-04B SARA-U270-53S SARA-U270-73S SARA-U280-03S LISA-U200-03S LISA-U200-83S LISA-U201					
Attributes	**Syntax**	**PIN required**	**Settings saved**	**Can be aborted**	**Response time**	**Error reference**
	full	Yes	No	No	-	+CME Error

12.21.1 Description

Returns all eMLPP priority subscriptions of the user stored on the SIM card in EF_{eMLPP} (see the 3GPP TS 51.011 [18] and the 3GPP TS 31.102 [19]). If no explicit priority level subscription is stored in EF_{eMLPP} the final result code OK is returned.

12.21.2 Syntax

Type	Syntax	Response	Example
Action	AT+CPPS	[+CPPS: <priority>[,<priority>[...]]] OK	AT+CPPS OK
Test	AT+CPPS=?	OK	

12.21.3 Defined values

Parameter	Type	Description
<priority>	Number	eMLPP subscription to priority level {0,1,..,4} as defined in defined in eMLPP specification 3GPP TS 22.067 [59]

12.22 Automatic answer for eMLPP service +CAAP

+CAAP						
Modules	SARA-U201 SARA-U260-03S SARA-U270-03A SARA-U270-03S SARA-U270-04B SARA-U270-53S SARA-U270-73S SARA-U280-03S LISA-U200-03S LISA-U200-83S LISA-U201					
Attributes	**Syntax**	**PIN required**	**Settings saved**	**Can be aborted**	**Response time**	**Error reference**
	full	Yes	No	No	-	+CME Error

12.22.1 Description

Edits the status of the priority level for the automatic answering for eMLPP stored on the SIM card in EF_{AAeM} (see the 3GPP TS 51.011 [18] and 3GPP TS 31.102 [19]). If the user has no subscription to the priority level status he wants to edit, an error result code is returned. The read command returns all enabled priority levels for automatic answering for eMLPP stored on the SIM card or in EF_{AAeM}. If no priority level is enabled for automatic answering for eMLPP, the OK final result code is returned.

12.22.2 Syntax

Type	Syntax	Response	Example
Set	AT+CAAP=<priority>,<status>	OK	AT+CAAP=0,1 OK
Read	AT+CAAP?	[+CAAP: <priority>[,<priority>[...]]] OK	AT+CAAP? OK
Test	AT+CAAP=?	+CAAP: (list of supported <priority>s),(list of supported <status>s) OK	+CAAP: (0-4),(0-1) OK

12.22.3 Defined values

Parameter	Type	Description
<priority>	Number	eMLPP fast call set-up priority level {A,B,0,1,..,4} as defined in eMLPP specification 3GPP TS 22.067 [59]
<status>	Number	• 0: <priority> for automatic answering disabled • 1: <priority> for automatic answering enabled

13 Circuit switched data services

13.1 Introduction

For CSD services, it is advised to enable the XID negotiation using the configuration AT+CRLP=61,61,48,7.

13.2 Select bearer service type +CBST

+CBST						
Modules	LARA-R202 LARA-R203 LARA-R211 LARA-R280 TOBY-R2					
	SARA-U2 LISA-U2 LISA-U1					
	SARA-G3 LEON-G1					
Attributes	**Syntax**	**PIN required**	**Settings saved**	**Can be aborted**	**Response time**	**Error reference**
	partial	No	Profile	No	-	+CME Error

13.2.1 Description

Selects the bearer service <name> with data rate <speed> and the connection element <ce> to use for data calls.

13.2.2 Syntax

Type	Syntax	Response	Example
Set	AT+CBST=[<speed>[,<name>[,<ce>]]]	OK	AT+CBST=5,0,1 OK
Read	AT+CBST?	+CBST: <speed>,<name>,<ce> OK	+CBST: 14,0,1 OK
Test	AT+CBST=?	+CBST: (list of supported <speed>s),(list of supported <name>s),(list of supported <ce>s) OK	+CBST: (0,4-7,12,14-16,68,70-71,75,79-81,83-84,115-116,130-131,133-134),(0,1),(0-3) OK

13.2.3 Defined values

Parameter	Type	Description
<speed>	Number	• 0: autobauding • 4: 2400 b/s (V.22bis) (RAT GSM only) • 5: 2400 b/s (V.26ter) (RAT GSM only) • 6: 4800 b/s (V.32) • 7: 9600 b/s (V.32) • 12: 9600 b/s (V.34) (only for UMTS RAT) • 14: 14400 b/s (V.34) (only for UMTS RAT) • 15: 19200 b/s (V.34) (only for UMTS RAT) • 16: 28800 b/s (V.34) (only for UMTS RAT) • 68: 2400 b/s (V110 or X.31 flag stuffing) (RAT GSM only) • 70: 4800 b/s (V110 or X.31 flag stuffing) • 71 (default and factory-programmed value): 9600 b/s (V110 or X.31 flag stuffing) • 75: 14400 b/s (V110 or X.31 flag stuffing) (only for UMTS RAT) • 79: 19200 b/s (V110 or X.31 flag stuffing) (only for UMTS RAT) • 80: 28800 b/s (V110 or X.31 flag stuffing) (only for UMTS RAT) • 81: 38400 b/s (V110 or X.31 flag stuffing) (only for UMTS RAT) • 83: 56000 b/s (V110 or X.31 flag stuffing) (only for UMTS RAT) • 84: 64000 b/s (X.31 flag stuffing) (only for UMTS RAT) • 115: 56000 b/s (bit transparent) (only for UMTS RAT) • 116: 64000 b/s (bit transparent) (only for UMTS RAT) • 130: 28800 b/s (multimedia) (only for UMTS RAT) • 131: 32000 b/s (multimedia) (only for UMTS RAT)

Parameter	Type	Description
		• 133: 56000 b/s (multimedia) (only for UMTS RAT) • 134: 64000 b/s (multimedia) (only for UMTS RAT)
<name>	Number	Bearer service name • 0 (default and factory-programmed value): data circuit asynchronous (UDI or 3.1 kHz modem) • 1: data circuit synchronous (UDI or 3.1 kHz modem)
<ce>	Number	Connection element • 0: transparent • 1 (default and factory-programmed value): non-transparent • 2: both, transparent preferred (RAT GSM only) • 3: both, non-transparent preferred (RAT GSM only)

13.2.4 Notes

- Several <speed> values are allowed in GSM or UMTS RAT only: see the parameter's description for correct settings.
- The modules do not support all the parameter combinations listed in 3GPP TS 22.002 [58].

LARA-R2 / TOBY-R2 / SARA-U2 / LISA-U2 / LISA-U1

- See Table 17 (in the +UDCONF=32 command description) for a more detailed list of the parameter combinations supported.

SARA-G3

- The default and factory-programmed value of <speed> is 7.
- These values of <speed> are not supported: 12, 14, 15, 16, 75, 79, 80, 81, 83, 84, 115, 116, 130, 131, 133 and 134.
- See Table 15 for a more detailed list of the parameter combinations supported.

LEON-G1

- The default and factory-programmed value of <speed> is 7.
- These values of <speed> are not supported: 12, 14, 15, 16, 75, 79, 80, 81, 83, 84, 115, 116, 130, 131, 133 and 134.
- See Table 15 for a more detailed list of the parameter combinations supported.

SARA-G3 / LEON-G1

Connection type	Transfer capability type	AT+CBST	Rate (bit/s)	Type
Async transparent	Audio 3.1 kHz	4,0,0	2400	V22 bis
		5,0,0	2400	V26 ter
		6,0,0	4800	V32
		7,0,0	9600	V32
	UDI Data	68,0,0	2400	V110
		70,0,0	4800	V110
		71,0,0	9600	V110
Async non transparent	Audio 3.1 kHz	0,0,1	Autobauding	Autobauding
		6,0,1	4800	V32
		7,0,1	9600	V32
	UDI Data	70,0,1	4800	V110
		71,0,1	9600	V110
Async transparent preferred	Audio 3.1 kHz	0,0,2	Autobauding	Autobauding
		6,0,2	4800	V32
		7,0,2	9600	V32
	UDI Data	70,0,2	4800	V110
		71,0,2	9600	V110
Async non transparent preferred	Audio 3.1 kHz	0,0,3	Autobauding	Autobauding
		6,0,3	4800	V32
		7,0,3	9600	V32
	UDI Data	70,0,3	4800	V110
		71,0,3	9600	V110

Table 15: AT+CBST parameter combinations

13.3 Connection type groups configuration +UDCONF=32

+UDCONF=32						
Modules	LARA-R202 LARA-R203 LARA-R211 LARA-R280 TOBY-R2					
	SARA-U2 LISA-U200-01S LISA-U200-02S LISA-U200-03S LISA-U200-52S LISA-U200-62S LISA-U200-83S LISA-U201 LISA-U230 LISA-U260 LISA-U270					
Attributes	**Syntax**	**PIN required**	**Settings saved**	**Can be aborted**	**Response time**	**Error reference**
	partial	No	NVM	No	-	+CME Error

13.3.1 Description

Enables/disables the connection type groups.

Meaning, availability and relationship of data connection types groups with AT+CBST parameters are described in Table 17.

13.3.2 Syntax

Type	Syntax	Response	Example
Set	AT+UDCONF=32,<conn_type_groups_bitmap>	OK	AT+UDCONF=32,1 OK
Read	AT+UDCONF=32	+UDCONF: 32,<active_conn_type_groups_bitmap>,<configured_conn_type_groups_bitmap> OK	AT+UDCONF=32 +UDCONF: 32,1,1 OK

13.3.3 Defined values

Parameter	Type	Description
<conn_type_groups_bitmap>	Number	Bitmask representing the list of "connection type groups" supported after the reboot. Valid range is 0-127 (equivalent to bits 0000000-1111111). The factory-programmed bitmask is 127 (all the groups are supported). See the Table 16 for the meaning of each bit. See the Notes for the meaning of each group.
<active_conn_type_groups_bitmap>	Number	The currently active connection type groups, in the format described for <conn_type_groups_bitmap>
<configured_conn_type_groups_bitmap>	Number	The list of the connection type groups that is supported after reboot, in the format described for <conn_type_groups_bitmap>

13.3.4 Notes

Bit	Connection type group
0	UDI multimedia
1	UDI data
2	RDI
3	Audio 3.1 kHz
4	All sync transparent
5	All async transparent
6	All async non transparent

Table 16: Connection type group bit description

- The connection type groups 4, 5 and 6 partially include the groups 1, 2 and 3. Enabling a super-group forces all sub-groups to be enabled; enabling a sub-group is possible even if the super-group is disabled. The meaning of each data connection super-group is defined as follows:

Group	Transfer capability group	AT+CBST	Rate (bit/s)	Type	2G	3G
Async transparent	Audio 3.1 kHz	4,0,0	2400	V22 bis	•	
		5,0,0	2400	V26 ter	•	
		6,0,0	4800	V32	•	

Group	Transfer capability group	AT+CBST	Rate (bit/s)	Type	2G	3G
		7,0,0	9600	V32	•	
		16,0,0	28800	V34		•
	UDI data	68,0,0	2400	V110	•	
		70,0,0	4800	V110	•	
		71,0,0	9600	V110	•	
Async non transparent	Audio 3.1 kHz	0,0,1	Autobauding	Autobauding	•	•
		4,0,1	2400	V22 bis	•	
		5,0,1	2400	V26 ter	•	
		6,0,1	4800	V32	•	•
		7,0,1	9600	V32	•	•
		12,0,1	9600	V34		•
		14,0,1	14400	V34		•
		15,0,1	19200	V34		•
		16,0,1	28800	V34		•
	UDI data	68,0,1	2400	V110	•	
		70,0,1	4800	V110	•	•
		71,0,1	9600	V110	•	•
		75,0,1	14400	V110		•
		79,0,1	19200	V110		•
		80,0,1	28800	V110		•
		81,0,1	38400	V110		•
	RDI data	83,0,1	56000	V110		•
	UDI data	84,0,1	64000	FTM		•
Sync transparent	Audio 3.1 kHz	16,1,0	28800	V34		•
	UDI data	83,1,0	56000	V110		•
	RDI data	115,1,0	56000	bit transparent		•
	UDI data	116,1,0	64000	bit transparent		•
	UDI multimedia	130,1,0	64000	multimedia		•
		131,1,0	64000	multimedia		•
		133,1,0	64000	multimedia		•
		134,1,0	64000	multimedia		•

Table 17: Data connection groups: meaning, availability and relationship with AT+CBST parameters

- If a call class is disabled then:
  - The outgoing calls are rejected when the ATD command is invoked (NO CARRIER is printed)
  - The incoming calls are rejected by the stack and the user will receive no notification (e.g. no RING)

13.4 Circuit switched data (CSD) configuration +UCSD

+UCSD						
Modules	SARA-G340 SARA-G350 SARA-G350-53S LEON-G1					
Attributes	**Syntax**	**PIN required**	**Settings saved**	**Can be aborted**	**Response time**	**Error reference**
	full	No	NVM	No	-	+CME Error

13.4.1 Description

Sets or gets the value of the specified parameter in a specific GSM circuit switched data (CSD) profile, or reads the current values of all parameters of the given PSD profile, listing them in separated lines.

☞ The parameter values set with this command are volatile, but the whole profile may be stored in NVM with the AT+UCSDA command.

☞ In the set command, if only the first two parameters are issued, the module returns the current setting of the corresponding remaining parameter. Otherwise only the "OK" result code is returned.

☞ In the set command, if only the first parameter is issued, the module returns all the parameters of the given PSD profile, and lists them in separated lines.

13.4.2 Syntax

Type	Syntax	Response	Example
Set	Set command AT+UCSD=<profile_id>,<param_tag>,<param_val>	OK	AT+UCSD=2,1,0 OK
Get	CSD Get command AT+UCSD=<profile_id>,<param_tag> CSD Get All command AT+UCSD=<profile_id>	+UCSD: <profile_id>,<param_tag>,<param_val> OK +UCSD: <profile_id>,0,<param_val0> ..... OK	AT+UCSD=2,1 +UCSD: 2,1,0 OK AT+UCSD=0 +UCSD: 0,0,"8001234564" +UCSD: 0,1,0 +UCSD: 0,2,"username" +UCSD: 0,4,"0.0.0.0" +UCSD: 0,5,"0.0.0.0" +UCSD: 0,6,0 OK

13.4.3 Defined values

Parameter	Type	Description
<profile_id>	Number	CSD profile identifier, in range 0-6
<param_tag>	Number	• 0: Phone number - <param_val> is defined by a text string, such as "36912345678". The factory-programmed value is an empty string. • 1: Call type - <param_val> may be: o 0 (factory-programmed value): analog o 1: ISDN • 2: Username - <param_val> is the user name text string for the authentication phase. The factory-programmed value is an empty string. • 3: Password - <param_val> is the password text string for the authentication phase. Note: the AT+UCSD Get command with <param_tag> = 3 is not allowed • 4: DNS1 - <param_val> is the text string of the primary DNS address in dotted decimal notation form (i.e. four numbers in range 0-255 separated by periods, like "xxx.yyy.zzz.www"). The factory-programmed value is "0.0.0.0". • 5: DNS2 - <param_val> is the text string of the secondary DNS address in dotted decimal notation form (i.e. four numbers in range 0-255 separated by periods, like "xxx.yyy.zzz.www"). The factory-programmed value is "0.0.0.0". • 6: Timeout (RFU) - <param_val> represents the linger time: if there is no data transfer for the given time-out, the call is hang-up). Note: currently not implemented. Parameter 6 can be neither set nor retrieved. The factory-programmed value is 0.

13.5 Circuit switched data (CSD) action +UCSDA

+UCSDA						
Modules	SARA-G340 SARA-G350 SARA-G350-53S LEON-G1					
Attributes	Syntax	PIN required	Settings saved	Can be aborted	Response time	Error reference
	full	No	No	No	Up to 3 min	+CME Error

13.5.1 Description

Performs the requested action for the specified CSD profile.

13.5.2 Syntax

Type	Syntax	Response	Example
Set	AT+UCSDA=<profile_id>,<action>	OK	AT+UCSDA=3,0 OK

Type	Syntax	Response	Example
URC		+UUCSDD: <profile_id>	

13.5.3 Defined values

Parameter	Type	Description
<profile_id>	Number	CSD profile identifier, in range 0-6
<action>	Number	• 0: (Reset) clears the specified profile, resetting all parameters to their factory-programmed values • 1: (Store) saves all parameters of the specified profile in NVM for future retrieval • 2: (Load) reads all parameters of the specified profile from NVM • 3: (Activate) performs end-to-end connection establishment for the specified CSD profile, using its pre-defined parameters (i.e. service provider number) • 4: (Deactivate) releases the GSM data call associated with the specified CSD profile

13.5.4 Notes

- Only one profile at a time can be associated with an active GSM call.
- in case of remote disconnection of a GSM call associated to a CSD profile, the URC is sent to the TE to inform the user, otherwise the user is in charge of connection release after usage.

13.6 Circuit switched network-assigned data +UCSND

+UCSND						
Modules	SARA-G340 SARA-G350 SARA-G350-53S LEON-G1					
Attributes	Syntax	PIN required	Settings saved	Can be aborted	Response time	Error reference
	full	No	No	No	-	+CME Error

13.6.1 Description

Returns the current (dynamic) network-assigned value of the specified parameter of the active GSM data call associated with the specified CSD profile.

13.6.2 Syntax

Type	Syntax	Response	Example
Set	AT+UCSND=<profile_id>,<param_tag>	+UCSND: <profile_id>,<param_tag>, <dynamic_param_val> OK	AT+UCSND=2,0 +UCSND: 2,0,"151.9.78.170" OK

13.6.3 Defined values

Parameter	Type	Description
<profile_id>	Number	CSD profile identifier, in range 0-6
<param_tag>	Number	• 0: IP address: dynamic IP address assigned during context activation • 1: DNS1: dynamic primary DNS address • 2: DNS2: dynamic secondary DNS address
<dynamic_param_val>	String	Value of the specified <param_tag>

13.7 Service class selection and identification +FCLASS

+FCLASS						
Modules	TOBY-L4 TOBY-L2 MPCI-L2					
	LARA-R202 LARA-R203 LARA-R211 LARA-R280 TOBY-R2					
	SARA-U2 LISA-U2 LISA-U1					
	SARA-G3 LEON-G1					
Attributes	**Syntax**	**PIN required**	**Settings saved**	**Can be aborted**	**Response time**	**Error reference**
	partial	No	No	No	-	+CME Error

13.7.1 Description

Configures the operation mode (voice, data or FAX) of the MT.

13.7.2 Syntax

Type	Syntax	Response	Example
Set	AT+FCLASS=<class>	OK	AT+FCLASS=2.0 OK
Read	AT+FCLASS?	<n> OK	0 OK
Test	AT+FCLASS=?	(list of supported <class>s) OK	(0,8) OK

13.7.3 Defined values

Parameter	Type	Description
<class>	Number	Operation mode: • 0 (default value): data • 2.0: reserved • 8: voice

13.7.4 Notes

TOBY-L4

- <class>=8 (voice) is the unique supported value and it is the default value.

TOBY-L2

- <class>=8 (voice) is the unique supported value and it is the default value.

TOBY-L200-00S / TOBY-L201 / TOBY-L210-00S / TOBY-L210-60S / MPCI-L200-00S / MPCI-L201 / MPCI-L210-00S / MPCI-L210-60S

- The set command is not allowed while the read and the test command only return the "OK" final result code.

LARA-R2 / TOBY-R2 / SARA-U2 / LISA-U2 / LISA-U1

- The selected operation mode is only set for the following CS call.

LISA-U200-00S / LISA-U100 / LISA-U110

- <class>=8 is not supported.

SARA-G340 / SARA-G350

- <class>=2.0 is dedicated to FAX (service class 2).

SARA-G300 / SARA-G310

- <class>=8 is not supported.

LEON-G1

- <class>=2.0 is dedicated to FAX (service class 2).

13.8 Service reporting control +CR

+CR						
Modules	LARA-R202 LARA-R203 LARA-R211 LARA-R280 TOBY-R2					
	SARA-U2 LISA-U2 LISA-U1					
	SARA-G3 LEON-G1					
Attributes	**Syntax**	**PIN required**	**Settings saved**	**Can be aborted**	**Response time**	**Error reference**
	full	No	Profile	No	< 10 s	+CME Error

13.8.1 Description

Controls whether the intermediate result code is returned or not. If enabled, the intermediate result code is transmitted when, during the connection negotiation, the MT has determined which speed and quality of service will be used, before any error control or data compression reports are transmitted, and before the intermediate result code CONNECT is transmitted.

13.8.2 Syntax

Type	Syntax	Response	Example
Set	AT+CR=[<mode>]	OK	AT+CR=0 OK
Read	AT+CR?	+CR: <mode> OK	+CR: 0 OK
Test	AT+CR=?	+CR: (list of supported <mode>s) OK	+CR: (0-1) OK
IRC		+CR: <serv>	

13.8.3 Defined values

Parameter	Type	Description
<mode>	Number	• 0 (default value and factory-programmed value): disables reporting • 1: enables reporting
<serv>	String	Service name • ASYNC: asynchronous transparent • REL ASYNC: asynchronous non-transparent (reliable) • REL SYNC: synchronous non-transparent (reliable) • SYNC: synchronous transparent

13.8.4 Notes

- <serv>=REL ASYNC applies only for incoming or outgoing data calls.

13.9 Cellular result codes +CRC

+CRC						
Modules	TOBY-L4 TOBY-L2 MPCI-L2					
	LARA-R202 LARA-R203 LARA-R211 LARA-R280 TOBY-R2					
	SARA-U2 LISA-U2 LISA-U1					
	SARA-G3 LEON-G1					
Attributes	**Syntax**	**PIN required**	**Settings saved**	**Can be aborted**	**Response time**	**Error reference**
	partial	No	Profile	No	-	+CME Error

13.9.1 Description

Enables the detailed ring indication for the incoming calls. Instead of RING, the **+CRING: <type>** URC is displayed.

13.9.2 Syntax

Type	Syntax	Response	Example
Set	AT+CRC=[<mode>]	OK	AT+CRC=0 OK
Read	AT+CRC?	+CRC: <mode> OK	
Test	AT+CRC=?	+CRC: (list of supported <mode>s) OK	+CRC: (0-1) OK
URC		+CRING: <type>	

13.9.3 Defined values

Parameter	Type	Description
<mode>	Number	• 0 (default value and factory-programmed setting): extended format disabled • 1: extended format enabled
<type>	String	Ring indication description: • ASYNC: asynchronous transparent • REL ASYNC: asynchronous non-transparent (reliable) • SYNC: synchronous transparent • REL SYNC: synchronous non-transparent (reliable) • FAX: facsimile (TS62) • VOICE: normal voice (TS11) • ALT VOICE / FAX: alternating voice/FAX, voice first (TS61) • ALT FAX / VOICE: alternating voice/FAX, FAX first (TS61) • GPRS <PDP_type>,<PDP_addr>,<L2P>,<APN>: GPRS network request for the PDP context activation

13.9.4 Notes

TOBY-L4

- <type>="ASYNC", "REL ASYNC", "SYNC", "REL SYNC", FAX", "ALT VOICE / FAX", "ALT FAX / VOICE", "GPRS" are not supported.

LARA-R2 / TOBY-R2 / SARA-U2 / LISA-U2 / LISA-U1

- <type>="FAX", "ALT VOICE / FAX", "ALT FAX / VOICE", "GPRS" are not supported.

SARA-U201-63B / LISA-U200-62S

- <type>=GPRS is supported. <PDP_type>, <PDP_addr>, <L2P>, <APN> are described in Parameter definition.

SARA-G3

- The <mode> parameter is mandatory.

SARA-G300 / SARA-G310

- <type>="FAX", "ALT VOICE / FAX", "ALT FAX / VOICE", "GPRS" are not supported.

LEON-G1

- The <mode> parameter is mandatory.
- <type>=GPRS is not supported.

13.10 Radio link protocol +CRLP

+CRLP						
Modules	LARA-R202 LARA-R203 LARA-R211 LARA-R280 TOBY-R2					
	SARA-U2 LISA-U2 LISA-U1					
	SARA-G3 LEON-G1					
Attributes	**Syntax**	**PIN required**	**Settings saved**	**Can be aborted**	**Response time**	**Error reference**
	full	Yes	Profile	No	-	+CME Error

13.10.1 Description

Sets the radio link protocol (RLP) parameters used when non-transparent data-calls are originated.

☞ The advised configuration for an optimal IOT performance is AT+CRLP=61,61,48,7.

13.10.2 Syntax

Type	Syntax	Response	Example
Set	AT+CRLP=[<iws>[,<mws>[,<T1>[,<N2>]]]]	OK	AT+CRLP=61,61,48,6 OK
Read	AT+CRLP?	+CRLP: <iws>,<mws>,<T1>,<N2> OK	+CRLP: 61,61,48,6 OK
Test	AT+CRLP=?	+CRLP: (lists of supported <iws>),(lists of supported <mws>),(lists of supported <T1>),(lists of supported <N2>) OK	+CRLP: (0-61),(0-61),(39-255),(1-255) OK

13.10.3 Defined values

Parameter	Type	Description
<iws>	Number	IWF (Interworking Function) to MT window size, range 0 - 61 (default and factory-programmed value: 61)
<mws>	Number	MT to IWF (Interworking Function) window size, range 0 - 61 (default and factory-programmed value: 61)
<T1>	Number	Acknowledgement timer T1, expressed in dozen of msec, range 39 - 255 (default and factory-programmed value: 48)
<N2>	Number	Retransmission attempts, range 1 - 255 (default and factory-programmed value: 7)

13.10.4 Notes

LISA-U200-00S / LISA-U200-01S / LISA-U200-02S / LISA-U200-52S / LISA-U200-62S / LISA-U230 / LISA-U260 / LISA-U270 / LISA-U1 / SARA-G300 / SARA-G310 / SARA-G340-00S / SARA-G350-00S / SARA-G350-00X / LEON-G100-06S

- The default and factory-programmed value of <N2> is 6.

SARA-G3 / LEON-G1

- The PIN insertion is not mandatory.

14 FAX class 2

14.1 Introduction

FAX commands are compliant with ITU_T recommendation V250 and V.25ter.

FAX service is carried out in five separate and consecutive phases:

- Phase A: Call set-up
- Phase B: Pre-message procedure for identifying and selecting the required facilities
- Phase C: Message transmission
- Phase D: Post-message procedure including end-of-message, confirmation and multi-document procedures
- Phase E: Call release

14.2 Adaptive answer +FAA

+FAA						
Modules	SARA-G340 SARA-G350 SARA-G350-53S LEON-G1					
Attributes	**Syntax**	**PIN required**	**Settings saved**	**Can be aborted**	**Response time**	**Error reference**
	full	Yes	No	No	-	+CME Error

14.2.1 Description

Allows an adaptive answer of DCE depending on the parameter <value>.

14.2.2 Syntax

Type	Syntax	Response	Example
Set	AT+FAA=<value>	OK	
Read	AT+FAA?	<value> OK	
Test	AT+FAA=?	(range of <value>s) OK	(0-1) OK

14.2.3 Defined values

Parameter	Type	Description
<value>	Number	• 0: the DCE shall answer only as a Class 2 facsimile device • 1: the DCE can automatically determine whether to answer as a facsimile DCE (in case of FAX call or alternate speech/fax call is detected) or as a data modem. If a data modem is detected, the DCE shall operate as described in ITU-T Recommendation T.32 par. 8.3.2.4.

14.3 Address & polling capabilities +FAP

+FAP						
Modules	SARA-G340 SARA-G350 SARA-G350-53S LEON-G1					
Attributes	**Syntax**	**PIN required**	**Settings saved**	**Can be aborted**	**Response time**	**Error reference**
	full	Yes	No	No	-	+CME Error

14.3.1 Description

Enables sending and receiving of SUB, SEP, and PWD frames.

14.3.2 Syntax

Type	Syntax	Response	Example
Set	AT+FAP=<sub>,<sep>,<pwd>	OK	

Type	Syntax	Response	Example
Read	AT+FAP?	<sub>,<sep>,<pwd> OK	
Test	AT+FAP=?	(range of <sub>s),(range of <sep>s), (range of <pwd>s) OK	(0-1),(0-1),(0-1) OK

14.3.3 Defined values

Parameter	Type	Description
<sub>	Number	Subaddressing; default value: 0
<sep>	Number	Selective polling; default value: 0
<pwd>	Number	Password; default value: 0

14.4 Buffer size +FBS

+FBS						
Modules	SARA-G340 SARA-G350 SARA-G350-53S LEON-G1					
Attributes	Syntax	PIN required	Settings saved	Can be aborted	Response time	Error reference
	full	Yes	No	No	-	+CME Error

14.4.1 Description

Allows the DCE to report the size of its data buffers for FAX services.

14.4.2 Syntax

Type	Syntax	Response	Example
Read	AT+FBS?	<tbs>,<rbs> OK	

14.4.3 Defined values

Parameter	Type	Description
<tbs>	Number	Transmit buffer size, i.e. 2048 bytes
<rbs>	Number	Receive buffer size, i.e. 2048 bytes

14.5 Data bit order +FBO

+FBO						
Modules	SARA-G340 SARA-G350 SARA-G350-53S LEON-G1					
Attributes	Syntax	PIN required	Settings saved	Can be aborted	Response time	Error reference
	full	Yes	No	No	-	+CME Error

14.5.1 Description

Controls the mapping between PSTN facsimile data and the DTE-DCE link. There are two options:

- Direct order: the first bit of each octet transferred on the DTE-DCE link is the first bit transferred on the GSTN (General Switched Telephone Network) data carrier
- Reversed order: the last bit of each octet transferred on the DTE-DCE link is the first bit transferred on the GSTN data carrier

14.5.2 Syntax

Type	Syntax	Response	Example
Set	AT+FBO=<value>	OK	
Read	AT+FBO?	<value> OK	

Type	Syntax	Response	Example
Test	AT+FBO=?	(range of <value>s) OK	(0-3) OK

14.5.3 Defined values

Parameter	Type	Description
<value>	Number	• 0: direct bit order • 1: reverse bit order for T.4 messages • 2: reverse bit order for HDLC messages • 3: reverse bit order for both T.4 and HDLC messages

14.6 HDLC frame reporting +FBU

+FBU						
Modules	SARA-G340 SARA-G350 SARA-G350-53S LEON-G1					
Attributes	Syntax	PIN required	Settings saved	Can be aborted	Response time	Error reference
	full	Yes	No	No	-	+CME Error

14.6.1 Description

Controls the DCE reporting of the contents of phase B and phase D HDLC frames to the DTE via intermediate result codes +FHT and FHR, as they are sent and received, in addition to other responses.

14.6.2 Syntax

Type	Syntax	Response	Example
Set	AT+FBU=<value>	OK	
Read	AT+FBU?	<value> OK	
Test	AT+FBU=?	(range of <value>s) OK	(0-1) OK

14.6.3 Defined values

Parameter	Type	Description
<value>	Number	• 0: HDLC reporting disabled • 1: HDLC reporting enabled

14.7 DS capabilities parameters +FCC

+FCC						
Modules	SARA-G340 SARA-G350 SARA-G350-53S LEON-G1					
Attributes	Syntax	PIN required	Settings saved	Can be aborted	Response time	Error reference
	full	Yes	No	No	-	+CME Error

14.7.1 Description

Allows the DTE to read and constrain the capabilities of the facsimile DCE based on the choices defined in table 2 of ITU-T Recommendation T.30. When any parameter is modified by the DTE via AT+FCC command, the DCE shall set accordingly the current session parameters (controlled by the AT+FIS command).

All command parameters are optional; if a parameter is left blank, its value remains unchanged.

14.7.2 Syntax

Type	Syntax	Response	Example
Set	AT+FCC=[[[[[[[[[<vr>], br>],<wd>], <ln>],<df>],<ec>],<bf>],<st>],<jp>]	OK	

Type	Syntax	Response	Example
Read	AT+FCC?	<vr>, ,<wd>,<ln>,<df>,<ec>, <bf>,<st>,<jp> OK	
Test	AT+FCC=?	(range of <vr>s),(range of s), (range of <wd>s),(range of <ln>s), (range of <df>s),(range of <ec>s), (range of <bf>s),(range of <st>s), (range of <jp>s) OK	(0-1),(0-3),(0),(0-2),(0),(0),(0),(0-7),(0) OK

14.7.3 Defined values

Parameter	Type	Description
<vr>	Number	Resolution in range 0-1
 	Number	Bit rate in range 0-3
<wd>	Number	Page width in pixels; only 0 value allowed
<ln>	Number	Page length in range 0-2
<df>	Number	Data compression format; only 0 value allowed
<ec>	Number	Error correction; only 0 value allowed
<bf>	Number	File transfer; only 0 value allowed
<st>	Number	Scan time/line; in range 0-7
<jp>	Number	JPEG for colour and B&W; only 0 value allowed

14.8 Copy quality checking +FCQ

+FCQ						
Modules	SARA-G340 SARA-G350 SARA-G350-53S LEON-G1					
Attributes	Syntax	PIN required	Settings saved	Can be aborted	Response time	Error reference
	full	Yes	No	No	-	+CME Error

14.8.1 Description

Allows the control of copy quality checking and correction by a facsimile DCE.

14.8.2 Syntax

Type	Syntax	Response	Example
Set	AT+FCQ=<rq>,<tq>	OK	
Read	AT+FCQ?	<rq>,<tq> OK	
Test	AT+FCQ=?	(range of <rq>s),(range of <tq>s) OK	(0),(0) OK

14.8.3 Defined values

Parameter	Type	Description
<rq>	Number	Controls copy quality checking and correction of data received from the remote station and delivered to DTE
<tq>	Number	Controls copy quality checking and correction of image data received from the DTE and sent to the remote station

14.9 Capability to receive data +FCR

+FCR						
Modules	SARA-G340 SARA-G350 SARA-G350-53S LEON-G1					
Attributes	**Syntax**	**PIN required**	**Settings saved**	**Can be aborted**	**Response time**	**Error reference**
	full	Yes	No	No	-	+CME Error

14.9.1 Description

Sets the capability to receive message data.

14.9.2 Syntax

Type	Syntax	Response	Example
Set	AT+FCR=<value>	OK	
Read	AT+FCR?	<value> OK	
Test	AT+FCR=?	(supported <value>) OK	(1) OK

14.9.3 Defined values

Parameter	Type	Description
<value>	Number	Only value 1 allowed; DCE can receive message data. Bit 10 in the DIS or DTC frame will be set

14.10 Current session results +FCS

+FCS						
Modules	SARA-G340 SARA-G350 SARA-G350-53S LEON-G1					
Attributes	**Syntax**	**PIN required**	**Settings saved**	**Can be aborted**	**Response time**	**Error reference**
	full	Yes	No	No	-	+CME Error

14.10.1 Description

Allows displaying the current session results, either as a response to the read syntax or as an intermediate result code during the execution of +FDT.

14.10.2 Syntax

Type	Syntax	Response	Example
Read	AT+FCS?	<vr>, ,<wd>,<ln>,<df>,<ec>, <bf>,<st>,<jp> OK	
IRC		+FCS=<vr>, ,<wd>,<ln>,<df>, <ec>,<bf>,<st>,<jp>	
IRC		+FDCS=<vr>, ,<wd>,<ln>,<df>, <ec>,<bf>,<st>,<jp>	

14.10.3 Defined values

See +FCC.

14.11 DTE phase C response timeout +FCT

+FCT						
Modules	SARA-G340 SARA-G350 SARA-G350-53S LEON-G1					
Attributes	**Syntax**	**PIN required**	**Settings saved**	**Can be aborted**	**Response time**	**Error reference**
	full	Yes	No	No	-	+CME Error

14.11.1 Description

Determines how long the DCE will wait for a command after having transmitted all available phase C data.

14.11.2 Syntax

Type	Syntax	Response	Example
Set	AT+FCT=<value>	OK	
Read	AT+FCT?	<value> OK	
Test	AT+FCT=?	(range of <value>s) OK	(1-FF) OK

14.11.3 Defined values

Parameter	Type	Description
<value>	Number	Range 0x0-0xFF, in 1 second units. Default value: 0x1E (30) s

14.12 Receive data +FDR

+FDR						
Modules	SARA-G340 SARA-G350 SARA-G350-53S LEON-G1					
Attributes	**Syntax**	**PIN required**	**Settings saved**	**Can be aborted**	**Response time**	**Error reference**
	full	Yes	No	No	-	+CME Error

14.12.1 Description

Initiates data reception.

14.12.2 Syntax

Type	Syntax	Response	Example
Action	AT+FDR	OK	

14.13 Transmit Data +FDT

+FDT						
Modules	SARA-G340 SARA-G350 SARA-G350-53S LEON-G1					
Attributes	**Syntax**	**PIN required**	**Settings saved**	**Can be aborted**	**Response time**	**Error reference**
	full	Yes	No	No	-	+CME Error

14.13.1 Description

Prefixes data transmission. It requests the DCE to transmit a phase C page. It is issued at the beginning of each page in phase B or D.

14.13.2 Syntax

Type	Syntax	Response	Example
Action	AT+FDT	OK	

14.14 Phase C received EOL alignment +FEA

+FEA						
Modules	SARA-G340 SARA-G350 SARA-G350-53S LEON-G1					
Attributes	**Syntax**	**PIN required**	**Settings saved**	**Can be aborted**	**Response time**	**Error reference**
	full	Yes	No	No	-	+CME Error

14.14.1 Description

Controls optional octet-alignment of EOL markers in received T.4 data stream. It does not apply to T.6 data, or to any form of data.

14.14.2 Syntax

Type	Syntax	Response	Example
Set	AT+FEA=<value>	OK	
Read	AT+FEA?	<value> OK	
Test	AT+FEA=?	(supported <value>s) OK	(0) OK

14.14.3 Defined values

Parameter	Type	Description
<value>	Number	• 0: determines that T.4 EOL patterns are bit aligned (as received) • 1: determines that the last received bits of T.4 EOL patterns are octet aligned by the DCE, with necessary zero fill bits inserted (RFU)

14.15 Format conversion +FFC

+FFC						
Modules	SARA-G340 SARA-G350 SARA-G350-53S LEON-G1					
Attributes	**Syntax**	**PIN required**	**Settings saved**	**Can be aborted**	**Response time**	**Error reference**
	full	Yes	No	No	-	+CME Error

14.15.1 Description

Determines the DCE response to mismatches between the phase C data delivered after the +FDT command and the data format parameters negotiated for the facsimile session. Currently no check or conversion is supported.

14.15.2 Syntax

Type	Syntax	Response	Example
Set	AT+FFC=<vrc>,<dfv>,<lnc>, <wdc>	OK	
Read	AT+FFC?	<vrc>,<dfv>,<lnc>,<wdc> OK	
Test	AT+FFC=?	(list of supported <vrc>s),(list of supported <dfv>s),(list of supported <lnc>s),(list of supported <wdc>s) OK	(0),(0),(0),(0) OK

14.15.3 Defined values

Parameter	Type	Description
<vrc>	Number	vertical resolution format codes • 0: ignored • 1: enabled (RFU) • 2: enabled for 1-D data (RFU)

Parameter	Type	Description
		• 3: enabled for 2-D data (RFU)
<dfc>	Number	data format codes • 0: ignored • 1: checking enabled (RFU) • 2: conversion (RFU)
<lnc>	Number	page length format codes • 0: ignored • 1: checking enabled (RFU) • 2: conversion for 1-D data (RFU) • 3: conversion enabled for 2-D data (RFU)
<wdc>	Number	page with format codes • 0: ignored • 1: checking enabled (RFU) • 2: conversion enabled (RFU)

14.16 Report file transfer diagnostic frame +FFD

+FFD						
Modules	SARA-G340 SARA-G350 SARA-G350-53S LEON-G1					
Attributes	**Syntax**	**PIN required**	**Settings saved**	**Can be aborted**	**Response time**	**Error reference**
	full	Yes	No	No	-	+CME Error

14.16.1 Description

This command has no parameters.

14.16.2 Syntax

Type	Syntax	Response	Example
Action	AT+FFD	OK	

14.17 Call termination status +FHS

+FHS						
Modules	SARA-G340 SARA-G350 SARA-G350-53S LEON-G1					
Attributes	**Syntax**	**PIN required**	**Settings saved**	**Can be aborted**	**Response time**	**Error reference**
	full	Yes	No	No	-	+CME Error

14.17.1 Description

indicates the cause of a hang-up; the cause is set by the DCE at the conclusion of a FAX session and reset to 0 at the beginning of phase A.

14.17.2 Syntax

Type	Syntax	Response	Example
Read	AT+FHS?	<value> OK	

14.17.3 Defined values

Parameter	Type	Description
<value>	Number	• 0x00: undefined • 0x02: fax call cleared by the remote modem or the DTE • 0x 11: Fax modem timed out in phase B • 0x20: Unspecified transmitting phase B error • 0x23: Invalid command received in transmitting phase B • 0x40: Unspecified transmitting phase C error

Parameter	Type	Description
		• 0x43: Send fax data underflow • 0x70: Unspecified receiving phase B error • 0x50: Unspecified transmitting phase D error • 0xA0: Unspecified receiving phase D error

14.18 Procedure interrupt enable +FIE

+FIE						
Modules	SARA-G340 SARA-G350 SARA-G350-53S LEON-G1					
Attributes	Syntax	PIN required	Settings saved	Can be aborted	Response time	Error reference
	full	Yes	No	No	-	+CME Error

14.18.1 Description

Controls the procedure of interrupt handling.

14.18.2 Syntax

Type	Syntax	Response	Example
Set	AT+FIE=<value>	OK	
Read	AT+FIE?	<value> OK	
Test	AT+FIE=?	(range of <value>s) OK	(0-1) OK
IRC		+FET:<pmc>	

14.18.3 Defined values

Parameter	Type	Description
<value>	Number	• 0: procedure interrupt requests from the remote station are ignored and not reported to DTE • 1: procedure interrupt requests from the remote station are reported to DTE (allowed only on alternate speech/fax calls) as intermediate result code +FET
<pmc>	Number	Post message command • 0: MultiPage Signal - to indicate the end of a complete page of facsimile information and the return to phase C upon receipt of a confirmation • 1: End Of Message - to indicate the end of a complete page of facsimile information and return to phase B • 2: End Of Procedure - to indicate the end of a complete page of facsimile information and proceeding to phase E upon receipt of a confirmation • 3: same as 0, with return to phase B if operator intervention is accomplished • 4: same as 1, with return to phase B if operator intervention is accomplished • 5: same as 2, with return to phase B if operator intervention is accomplished

14.19 Initialize facsimile parameters +FIP

+FIP						
Modules	SARA-G340 SARA-G350 SARA-G350-53S LEON-G1					
Attributes	Syntax	PIN required	Settings saved	Can be aborted	Response time	Error reference
	full	Yes	No	No	-	+CME Error

14.19.1 Description

Causes the DCE to initialize all Service Class Facsimile Parameters to the factory-programmed settings. It does not change the +FCLASS setting. It should not be used when FAX connections are active.

14.19.2 Syntax

Type	Syntax	Response	Example
Set	AT+FIP=[<value>]	OK	
Read	AT+FIP?	0 OK	
Test	AT+FIP=?	(list of supported <value>s) OK	(0) OK

14.19.3 Defined values

Parameter	Type	Description
<value>	Number	indicates the profile; only one profile is possible for <value>=0

14.20 Current session parameters +FIS

+FIS						
Modules	SARA-G340 SARA-G350 SARA-G350-53S LEON-G1					
Attributes	**Syntax**	**PIN required**	**Settings saved**	**Can be aborted**	**Response time**	**Error reference**
	full	Yes	No	No	-	+CME Error

14.20.1 Description

Allows the DTE to sense and constrain the capabilities of the current session. An intermediate result code may also be sent to the DTE during fax calls to indicate current negotiated parameters.

14.20.2 Syntax

Type	Syntax	Response	Example
Set	AT+FIS=[[[[[[[[[<vr>],], <wd>], <ln>],<df>],<ec>], <bf>],<st>],<jp>]	OK	
Read	AT+FIS?	+FIS: <vr>, ,<wd>,<ln>,<df>, <ec>,<bf>,<st>,<jp> OK	
Test	AT+FIS=?	+FIS: (range of <vr>s),(range of s),(range of <wd>s), (range of <ln>s),((range of <df>s),(range of <ec>s), (range of <bf>s),(range of <st>s),(range of <jp>s) OK	+FIS: (0-1),(0-3),(0),(0-2),(0),(0),(0),(0-7),(0) OK
IRC		+FIS=<vr>, ,<wd>,<ln>, <df>, <ec>,<bf>,<st>,<jp>	

14.20.3 Defined values

Parameter	Type	Description
<vr>	Number	Resolution, range 0-1
 	Number	Bit rate, range 0-3
<wd>	Number	Page width in pixels; only 0 value allowed
<ln>	Number	Page length, range 0-2
<df>	Number	Data compression format; only 0 value allowed
<ec>	Number	Error correction; only 0 value allowed
<bf>	Number	File transfer; only 0 value allowed
<st>	Number	Scan time/line, range 0-7
<jp>	Number	JPEG for colour and B&W; only 0 value allowed

14.21 Inactivity timeout +FIT

+FIT						
Modules	SARA-G340 SARA-G350 SARA-G350-53S LEON-G1					
Attributes	**Syntax**	**PIN required**	**Settings saved**	**Can be aborted**	**Response time**	**Error reference**
	full	Yes	No	No	-	+CME Error

14.21.1 Description

Provides an inactivity timer which allows the DCE to break away from an unsuccessful connection attempt at any stage of a facsimile transfer.

14.21.2 Syntax

Type	Syntax	Response	Example
Set	AT+FIT=[<time>[,<action>]]	OK	
Read	AT+FIT?	<time>,<action> OK	
Test	AT+FIT=?	(range of <time>s),(supported <action>) OK	(0-255),(0) OK

14.21.3 Defined values

Parameter	Type	Description
<time>	Number	Timer duration in seconds, range 0-255
<action>	Number	Only value 0 possible, which means: when timer expire, the DCE shall clear the call.

14.22 Session termination +FKS, +FK

+FK						
Modules	SARA-G340 SARA-G350 SARA-G350-53S LEON-G1					
Attributes	**Syntax**	**PIN required**	**Settings saved**	**Can be aborted**	**Response time**	**Error reference**
	full	Yes	No	No	-	+CME Error

14.22.1 Description

Causes the DCE to terminate the session in an orderly manner: if the DCE has an active, non-transmitting FAX call, it will send a DCN message and hang up.

14.22.2 Syntax

Type	Syntax	Response	Example
Set	AT+FK<S>	OK	

14.23 Local ID string +FLI

+FLI						
Modules	SARA-G340 SARA-G350 SARA-G350-53S LEON-G1					
Attributes	**Syntax**	**PIN required**	**Settings saved**	**Can be aborted**	**Response time**	**Error reference**
	full	Yes	No	No	-	+CME Error

14.23.1 Description

Determines that DCE sends the ID frame if +FLI is not a zero-string.

14.23.2 Syntax

Type	Syntax	Response	Example
Set	AT+FLI=<local ID string>	OK	

Type	Syntax	Response	Example
Read	AT+FLI?	<local ID string> OK	
Test	AT+FLI=?	(range of char values) OK	(20-7E) OK

14.23.3 Defined values

Parameter	Type	Description
<local ID string>	String	20 digit string; valid codes for characters are in the range 0x20-0x7E

14.24 Set flow control +FLO

+FLO						
Modules	SARA-G340 SARA-G350 SARA-G350-53S LEON-G1					
Attributes	**Syntax**	**PIN required**	**Settings saved**	**Can be aborted**	**Response time**	**Error reference**
	full	Yes	No	No	-	+CME Error

14.24.1 Description

Allows setting the flow control for communication via V.24 interface.

14.24.2 Syntax

Type	Syntax	Response	Example
Set	AT+FLO=<value>	OK	
Read	AT+FLO?	<value> OK	
Test	AT+FLO=?	(range of <value>s) OK	(0-2) OK

14.24.3 Defined values

Parameter	Type	Description
<value>	Number	indicates the kind of flow control • 0: DTE-DCE flow control is disabled • 1: DTE-DCE flow control is DC1/DC3 (SW flow control) • 2: DTE-DCE flow control is RTC/CTS (HW flow control)

14.25 Indicate document to poll +FLP

+FLP						
Modules	SARA-G340 SARA-G350 SARA-G350-53S LEON-G1					
Attributes	**Syntax**	**PIN required**	**Settings saved**	**Can be aborted**	**Response time**	**Error reference**
	full	Yes	No	No	-	+CME Error

14.25.1 Description

Indicates that a document is available for retrieval. By default the DTE has no document to poll.

14.25.2 Syntax

Type	Syntax	Response	Example
Set	AT+FLP=<value>	OK	
Read	AT+FLP?	<value> OK	
Test	AT+FLP=?	(range of <value>s) OK	(0) OK

14.25.3 Defined values

Parameter	Type	Description
<value>	Number	only value 0 is allowed

14.26 Request manufacturer identification +FMI

+FMI						
Modules	SARA-G340 SARA-G350 SARA-G350-53S LEON-G1					
Attributes	Syntax	PIN required	Settings saved	Can be aborted	Response time	Error reference
	full	No	No	No	-	+CME Error

14.26.1 Description

Text string identifying the manufacturer.

14.26.2 Syntax

Type	Syntax	Response	Example
Action	AT+FMI	<manufacturer> OK	u-blox OK
Test	AT+FMI=?	OK	

14.26.3 Defined values

Parameter	Type	Description
<manufacturer>	String	manufacturer name

14.27 Request model identification +FMM

+FMM						
Modules	SARA-G340 SARA-G350 SARA-G350-53S LEON-G1					
Attributes	Syntax	PIN required	Settings saved	Can be aborted	Response time	Error reference
	full	No	No	No	-	+CME Error

14.27.1 Description

Text string identifying the model identification.

14.27.2 Syntax

Type	Syntax	Response	Example
Action	AT+FMM	<model> OK	SARA-G350 OK
Test	AT+FMM=?	OK	

14.27.3 Defined values

Parameter	Type	Description
<model>	String	Name of model

14.28 Request revision identification +FMR

+FMR						
Modules	SARA-G340 SARA-G350 SARA-G350-53S LEON-G1					
Attributes	**Syntax**	**PIN required**	**Settings saved**	**Can be aborted**	**Response time**	**Error reference**
	full	No	No	No	-	+CME Error

14.28.1 Description

Gives the firmware version of the module.

14.28.2 Syntax

Type	Syntax	Response	Example
Action	AT+FMR	<version> OK	07.11.00 OK
Test	AT+FMR=?	OK	

14.28.3 Defined values

Parameter	Type	Description
<version>	String	Firmware version

14.29 Minimum phase C speed +FMS

+FMS						
Modules	SARA-G340 SARA-G350 SARA-G350-53S LEON-G1					
Attributes	**Syntax**	**PIN required**	**Settings saved**	**Can be aborted**	**Response time**	**Error reference**
	full	Yes	No	No	-	+CME Error

14.29.1 Description

Limits the lowest negotiable speed for a fax session.

14.29.2 Syntax

Type	Syntax	Response	Example
Set	AT+FMS=<value>	OK	
Read	AT+FMS?	<value> OK	
Test	AT+FMS=?	(range of <value>s) OK	(0-3) OK

14.29.3 Defined values

Parameter	Type	Description
<value>	Number	• 0: 2400 b/s (default) • 1: 4800 b/s • 2: 7200 b/s • 3: 9600 b/s

14.30 Negotiation reporting +FNR

+FNR						
Modules	SARA-G340 SARA-G350 SARA-G350-53S LEON-G1					
Attributes	**Syntax**	**PIN required**	**Settings saved**	**Can be aborted**	**Response time**	**Error reference**
	full	Yes	No	No	-	+CME Error

14.30.1 Description

Controls the reporting of messages generated during T.30 phase B negotiations.

14.30.2 Syntax

Type	Syntax	Response	Example
Set	AT+FNR=[<rpr>[,<tpr>[,<idr>[,<nsr>]]]]	OK	
Read	AT+FNR?	<rpr>,<tpr>,<idr>,<nsr> OK	
Test	AT+FNR=?	(range of <rpr>s), (range of <tpr>), (range of <idr>s), (range of <nsr>s) OK	(0-1),(0-1),(0-1),(0-1) OK

14.30.3 Defined values

Parameter	Type	Description
<rpr>	Number	Receiver parameters reporting: 0-1 (no-yes)
<tpr>	Number	Transmitter parameters reporting: 0-1 (no-yes)
<idr>	String	ID strings reporting: 0-1 (no-yes)
<nsr>	String	Non-standard frame FIF octet string +FNS

14.31 Non-standard frame FIF octet string +FNS

+FNS						
Modules	SARA-G340 SARA-G350 SARA-G350-53S LEON-G1					
Attributes	**Syntax**	**PIN required**	**Settings saved**	**Can be aborted**	**Response time**	**Error reference**
	full	Yes	No	No	-	+CME Error

14.31.1 Description

Allows configuring the corresponding non-standard facilities frame. The command is not currently used.

14.31.2 Syntax

Type	Syntax	Response	Example
Set	AT+FNS=<string>	OK	
Read	AT+FNS?	<string> OK	
Test	AT+FNS=?	(range of character codes) OK	(20-7E) OK

14.31.3 Defined values

Parameter	Type	Description
<string>	String	Characters in range 0x20-0x7E

14.32 NSF message data indication +FND

+FND						
Modules	SARA-G340 SARA-G350 SARA-G350-53S LEON-G1					
Attributes	**Syntax**	**PIN required**	**Settings saved**	**Can be aborted**	**Response time**	**Error reference**
	full	Yes	No	No	-	+CME Error

14.32.1 Description

Controls indication of non-standard facilities frames. The command is not currently used.

14.32.2 Syntax

Type	Syntax	Response	Example
Set	AT+FND=<value>	OK	
Read	AT+FND?	<value> OK	
Test	AT+FND=?	(range of <value>s) OK	(0-1) OK

14.32.3 Defined values

Parameter	Type	Description
<value>	Number	range 0-1 (enabled/disabled).

14.33 Selective polling address +FPA

+FPA						
Modules	SARA-G340 SARA-G350 SARA-G350-53S LEON-G1					
Attributes	**Syntax**	**PIN required**	**Settings saved**	**Can be aborted**	**Response time**	**Error reference**
	full	Yes	No	No	-	+CME Error

14.33.1 Description

Sets the selective polling address. The DCE should send the numeric string contained in the +FPA at the times specified in T.30, if the corresponding parameter is not a zero string. The command is not currently used.

14.33.2 Syntax

Type	Syntax	Response	Example
Set	AT+FPA=<selective polling address string>	OK	AT+FPA="1234" OK
Read	AT+FPA?	<selective polling address string> OK	"1234" OK
Test	AT+FPA=?	(range of character codes) OK	(20-7E) OK

14.33.3 Defined values

Parameter	Type	Description
<selective polling address string>	String	20 digit string: values are in range 0x20-0x7E

14.34 Local polling ID string +FPI

+FPI						
Modules	SARA-G340 SARA-G350 SARA-G350-53S LEON-G1					
Attributes	**Syntax**	**PIN required**	**Settings saved**	**Can be aborted**	**Response time**	**Error reference**
	full	Yes	No	No	-	+CME Error

14.34.1 Description

Allows the DCE to send the ID frame if +FPI is not a null string. The command is not currently used.

14.34.2 Syntax

Type	Syntax	Response	Example
Set	AT+FPI=<local polling ID string>	OK	
Read	AT+FPI?	<local polling ID string> OK	"1234" OK
Test	AT+FPI=?	(range of character codes) OK	(20-7E) OK

14.34.3 Defined values

Parameter	Type	Description
<local polling ID string>	String	only null string "" is allowed

14.35 Packet protocol control +FPP

+FPP						
Modules	SARA-G340 SARA-G350 SARA-G350-53S LEON-G1					
Attributes	**Syntax**	**PIN required**	**Settings saved**	**Can be aborted**	**Response time**	**Error reference**
	full	Yes	No	No	-	+CME Error

14.35.1 Description

Allows controlling the packet protocol. The packet protocol is not currently supported.

14.35.2 Syntax

Type	Syntax	Response	Example
Set	AT+FPP=[<value>]	OK	
Read	AT+FPP?	<value> OK	
Test	AT+FPP=?	(supported <value>) OK	(0) OK

14.35.3 Defined values

Parameter	Type	Description
<value>	Number	only value 0 allowed

14.36 Page status +FPS

+FPS						
Modules	SARA-G340 SARA-G350 SARA-G350-53S LEON-G1					
Attributes	**Syntax**	**PIN required**	**Settings saved**	**Can be aborted**	**Response time**	**Error reference**
	full	Yes	No	No	-	+CME Error

14.36.1 Description

Sets the post page response, in particular end-of-page status, to be sent to the remote part. During fax transmission, post page response of the remote part is indicated to the DTE with an intermediate result code +FPS.

14.36.2 Syntax

Type	Syntax	Response	Example
Set	AT+FPS=[<value>]	OK	
Read	AT+FPS?	<value> OK	
Test	AT+FPS=?	(range of <value>) OK	(1-5) OK

14.36.3 Defined values

Parameter	Type	Description
<value>	Number	• 1: MCF, page good (default value) • 2: RTN, page bad; retrain requested • 3: RTP, page good; retrain requested • 4: PIN, page bad; interrupt requested • 5: PIP, page good; interrupt requested

14.37 Password parameter +FPW

+FPW						
Modules	SARA-G340 SARA-G350 SARA-G350-53S LEON-G1					
Attributes	**Syntax**	**PIN required**	**Settings saved**	**Can be aborted**	**Response time**	**Error reference**
	full	Yes	No	No	-	+CME Error

14.37.1 Description

Sets the password. The DCE sends the numeric string contained in +FPW at the times specified in T.30, if the corresponding parameter is not a null string.

14.37.2 Syntax

Type	Syntax	Response	Example
Set	AT+FPW=<password string>	OK	AT+FPW="1234" OK
Read	AT+FPW?	"<password string>" OK	
Test	AT+FPW=?	(range of <value>) OK	"1234" OK

14.37.3 Defined values

Parameter	Type	Description
<password string>	String	Valid characters: 0-9, *, #, space

14.38 Receive quality thresholds +FRQ

+FRQ						
Modules	SARA-G340 SARA-G350 SARA-G350-53S LEON-G1					
Attributes	**Syntax**	**PIN required**	**Settings saved**	**Can be aborted**	**Response time**	**Error reference**
	full	Yes	No	No	-	+CME Error

14.38.1 Description

Allows making the "Copy Quality OK" decision using the command parameters. The command is not currently used.

14.38.2 Syntax

Type	Syntax	Response	Example
Set	AT+FRQ=<pgl>,<cbl>	OK	
Read	AT+FRQ?	<pgl>,<cbl> OK	
Test	AT+FRQ=?	(supported <pgl>),(supported <cbl>) OK	(0),(0) OK

14.38.3 Defined values

Parameter	Type	Description
<pgl>	Number	Percentage of good lines: only value 0 accepted
<cbl>	Number	Consecutive bad lines: only value 0 accepted

14.39 Error correction mode retry count +FRY

+FRY						
Modules	SARA-G340 SARA-G350 SARA-G350-53S LEON-G1					
Attributes	**Syntax**	**PIN required**	**Settings saved**	**Can be aborted**	**Response time**	**Error reference**
	full	Yes	No	No	-	+CME Error

14.39.1 Description

Controls the retry counter in Error Correcting Mode. The command is not currently used.

14.39.2 Syntax

Type	Syntax	Response	Example
Set	AT+FRY=[<value>]	OK	
Read	AT+FRY?	<count> OK	
Test	AT+FRY=?	(range of <count>) OK	(0-FF) OK

14.39.3 Defined values

Parameter	Type	Description
<value>	Number	In range 0-0xFF (0 if blank)

14.40 SubAddress parameter +FSA

+FSA						
Modules	SARA-G340 SARA-G350 SARA-G350-53S LEON-G1					
Attributes	Syntax	PIN required	Settings saved	Can be aborted	Response time	Error reference
	full	Yes	No	No	-	+CME Error

14.40.1 Description

Sets the subaddress. The DCE sends the numeric string configured via AT+FSA at the times specified in T.30, if the corresponding parameter is not a null string.

14.40.2 Syntax

Type	Syntax	Response	Example
Set	AT+FSA=<destination SubAddress string>	OK	AT+FSA="1234" OK
Read	AT+FSA?	"<destination SubAddress string>" OK	"1234" OK
Test	AT+FSA=?	(range of character codes) OK	(20-7E) OK

14.40.3 Defined values

Parameter	Type	Description
<destination SubAddress string>	String	20 digit string; allowed values: 0-9, *, #, space

14.41 Request to poll +FSP

+FSP						
Modules	SARA-G340 SARA-G350 SARA-G350-53S LEON-G1					
Attributes	Syntax	PIN required	Settings saved	Can be aborted	Response time	Error reference
	full	Yes	No	No	-	+CME Error

14.41.1 Description

This command indicates whether or not the DTE wants to poll. The command is not currently used.

14.41.2 Syntax

Type	Syntax	Response	Example
Set	AT+FSP=[<value>]	OK	
Read	AT+FSP?	<value> OK	
Test	AT+FSP=?	(supported <value>) OK	(0) OK

14.42 Fax intermediate result codes

14.42.1 Description

According to Recommendation T.32, Tab. 6, the following intermediate result codes are provided to the DTE during fax calls.

IRC	Meaning
+FCO	Indicates connection with a fax terminal
+FVO	Indicates transition to voice
+FHS	Call terminated with status

IRC	Meaning
+FCS	Report the DCS frame information
+FDCS	Report the DCS frame information for speech/fax alternate calls
+FIS	Report the DIS frame information
+FTI	Report the remote (transmitting) ID, from TSI (Transmitting Subscriber Identification) frame
+FTSI	Report the remote (transmitting) ID, from TSI (Transmitting Subscriber Identification) frame for speech/fax alternate calls
+FCI	Report the remote (called) ID, from CSI (Called Subscriber Identification)
+FCSI	Report the remote (called) ID, from CSI (Called Subscriber Identification for speech/fax alternate calls)
+FET	Report post page message
+FPS	Report received page status
+FPTS	Report received page status for speech/fax alternate calls
+FHT	Report transmitted HDLC frames
+FHR	Debug report received HDLC frames

15 V24 control and V25ter

15.1 Introduction

These commands, unless specifically stated, do not implement set syntax using "=", read ("?"), or test ("=?"). If such commands are used, the "+CME ERROR: unknown" or "+CME ERROR: 100" error result code is provided (depending on the +CMEE AT command setting).

☞ SARA-G4 / SARA-G3 / LEON-G1
If the set, read or test syntax is used the "+CME ERROR: operation not supported" or "+CME ERROR: 4" error result code is provided ("+CME ERROR: operation not allowed" or "+CME ERROR: 3" depending on the +CMEE AT command setting.

15.2 Circuit 109 behavior &C

&C						
Modules	TOBY-L2 MPCI-L2					
	LARA-R2 TOBY-R2					
	SARA-U2 LISA-U2 LISA-U1					
	SARA-G4 SARA-G3 LEON-G1					
Attributes	**Syntax**	**PIN required**	**Settings saved**	**Can be aborted**	**Response time**	**Error reference**
	full	No	Profile	No	-	+CME Error

15.2.1 Description

Controls how the state of RS232 circuit 109 - Data Carrier Detect (DCD) - relates to the detection of received line signal from the remote end.

15.2.2 Syntax

Type	Syntax	Response	Example
Action	AT&C[<value>]	OK	

15.2.3 Defined values

Parameter	Type	Description
<value>	Number	Indicates the behavior of circuit 109 • 0: DCE always presents ON condition on circuit 109 • 1 (default value and factory-programmed value): circuit 109 changes in accordance with the Carrier detect status; ON if the Carrier is detected, OFF otherwise

15.2.4 Notes

- See the corresponding module system integration manual for the DCD behavior during the initialization phase of the module.

TOBY-L200-00S / TOBY-L210-00S / MPCI-L200-00S / MPCI-L210-00S

- The command has not effect.

15.3 Circuit 108/2 behavior &D

&D						
Modules	TOBY-L2 MPCI-L2					
	LARA-R2 TOBY-R2					
	SARA-U2 LISA-U2 LISA-U1					
	SARA-G4 SARA-G3 LEON-G1					
Attributes	**Syntax**	**PIN required**	**Settings saved**	**Can be aborted**	**Response time**	**Error reference**
	full	No	Profile	No	-	+CME Error

15.3.1 Description

Controls how the state of RS232 circuit 108/2 - Data Terminal Ready (DTR) - relates to changes from ON to OFF condition during on-line data state.

15.3.2 Syntax

Type	Syntax	Response	Example
Action	AT&D[<value>]	OK	

15.3.3 Defined values

Parameter	Type	Description
<value>	Number	• 0: the DCE ignores circuit 108/2 • 1 (default value and factory-programmed value): upon an ON-to-OFF transition of circuit 108/2, the DCE enters online command state and issues an OK result code • 2: upon an ON-to-OFF transition of circuit 108/2, the DCE performs an orderly cleardown of the call. The automatic answer is disabled while circuit 108/2 remains OFF

15.3.4 ~+++ behavior in PSD &D

☞ TOBY-L200-00S / TOBY-L210-00S / MPCI-L200-00S / MPCI-L210-00S
The ~+++ behavior in PSD &D is not supported.

- A special meaning of the &D value is provided for the ~+++ sequence during a PSD data transfer with PPP L2 protocol (this is outside the V25-ter specification scope). The ~+++ causes context deactivation during a PSD data transfer session for the AT&D0 and AT&D2 value (the +++ return to on-line command mode is provided for each &D value during a CSD data call)
- A different implementation for the ~+++ is done with the &D1 value: the PSD data transfer is escaped and system returns in the on-line command state. The ATO command is used to resume the PSD data transfer session
- During the on-line command mode different AT commands can be sent but data calls in PSD on-line command mode cannot be granted (activate the AT+CRC=1 mode to identify the kind of call and reject data incoming calls if PSD is in the on-line command mode)

☞ For more details see the ITU-T Recommendation V250 [20], ITU-T V.25ter Recommendation [21] and ITU-T V.32 Recommendation [22].

☞ See the corresponding module system integration manual for the DTR behavior during the initialization phase of the module.

15.3.5 Circuit 108/2, +++ behavior for the different &D: summarizing tables

CSD data mode		
Event	**DTE sends escape sequence (e.g. +++)**	**DTR On to Off transition**
&D0	DCE enters command mode	No action
&D1	DCE enters command mode	Switch to command mode
&D2	DCE enters command mode	Cleardown call

Table 18: CSD data mode

PSD data mode (PPP L2 protocol case)		
Event	**DTE sends ~+++**	**DTR On to Off transition**
&D0	Context deactivation	No action
&D1	DCE enters command mode	DCE enters command mode
&D2	Context deactivation	Context deactivation

Table 19: PSD data mode

15.3.6 Notes

- The ON/OFF DTR transition in direct link forces the DCE into command mode. In case of AT&D0 the DTR transition is ignored, also in direct link.
- The escape sequence for the PSD data mode with a L2 protocol different from the PPP is not ~+++, and it could be not supported. See the Table 20 for more information.

TOBY-L200-00S / TOBY-L210-00S / MPCI-L200-00S / MPCI-L210-00S

- The command has not effect.

SARA-U201-04A / SARA-U201-04B / SARA-U201-04X / SARA-U270-04B

- On the AUX UART interface, the DTR line is always considered to ON state (even if the AUX UART does not support the DTR line).

SARA-G340-02S / SARA-G340-02X / SARA-G350-02A / SARA-G350-02S / SARA-G350-02X

- On the AUX UART interface, the DTR line is always considered to ON state (even if the AUX UART does not support the DTR line).

15.4 DSR override &S

&S						
Modules	TOBY-L200-02S TOBY-L200-03A TOBY-L200-03S TOBY-L201 TOBY-L210-02S TOBY-L210-03A TOBY-L210-03S TOBY-L210-60S TOBY-L210-62S TOBY-L220 TOBY-L280 MPCI-L200-02S MPCI-L200-03S MPCI-L201 MPCI-L210-02S MPCI-L210-03S MPCI-L210-60S MPCI-L220 MPCI-L280					
	LARA-R2 TOBY-R2					
	SARA-U2 LISA-U2 LISA-U1					
	SARA-G4 SARA-G3 LEON-G1					
Attributes	**Syntax**	**PIN required**	**Settings saved**	**Can be aborted**	**Response time**	**Error reference**
	full	No	Profile	No	-	+CME Error

15.4.1 Description

Selects how the module will control RS232 circuit 107 - Data Set Ready (DSR).

15.4.2 Syntax

Type	Syntax	Response	Example
Action	AT&S[<value>]	OK	

15.4.3 Defined values

Parameter	Type	Description
<value>	Number	• 0: sets the DSR line to ON • 1 (default value and factory-programmed value): sets the DSR line to ON in data mode and to OFF in command mode

15.4.4 Notes

- See the corresponding module system integration manual for the DSR behavior during the initialization phase of the module.

MPCI-L2

- The command has no effect.

15.5 Flow control &K

&K						
Modules	TOBY-L200-02S TOBY-L200-03A TOBY-L200-03S TOBY-L201 TOBY-L210-02S TOBY-L210-03A TOBY-L210-03S TOBY-L210-60S TOBY-L210-62S TOBY-L220 TOBY-L280 MPCI-L200-02S MPCI-L200-03S MPCI-L201 MPCI-L210-02S MPCI-L210-03S MPCI-L210-60S MPCI-L220 MPCI-L280					
	LARA-R2 TOBY-R2					
	SARA-U2 LISA-U2 LISA-U1					
	SARA-G4 SARA-G3 LEON-G1					
Attributes	**Syntax**	**PIN required**	**Settings saved**	**Can be aborted**	**Response time**	**Error reference**
	full	No	Profile	No	-	+CME Error

15.5.1 Description

Controls the flow control mechanism. The following settings are allowed:

- No flow control
- HW flow control also referred with RTS / CTS flow control
- SW flow control also referred with XON / XOFF flow control

15.5.2 Syntax

Type	Syntax	Response	Example
Action	AT&K[<value>]	OK	

15.5.3 Defined values

Parameter	Type	Description
<value>	Number	• 0: disable DTE flow control • 3 (default and factory-programmed value): enable the RTS/CTS DTE flow control • 4: enable the XON/XOFF DTE flow control • 5: enable the XON/XOFF DTE flow control • 6: enable the XON/XOFF DTE flow control

15.5.4 Notes

- The command handling is the same for <value> parameter 4, 5 or 6.
- Set the <value> parameter of AT&K command to 0 (flow control disabled) or 4, 5 or 6 (software flow control) when the RTS and CTS lines are not physically connected.
- The software flow control (XON/XOFF) setting is not allowed on the USB interfaces, on the SPI interface and on a multiplexer channel. See the Multiple AT command interfaces for all the behavior differences in respect to the supported interfaces.
- The SW flow control (XON/XOFF) activation is only allowed in case of the text transmission: the binary data cannot be transmitted because it may contain the special flow control characters (XON/XOFF).
- When the software flow control (XON/XOFF) is used, the DC1 (XON, 0x11) and DC3 (XOFF, 0x13) characters are reserved and therefore filtered (e.g. in SMS text mode these two characters can not be input).
  Since the DTE-DCE communication relies on the correct reception of DC1/DC3 characters, the UART power saving should be disabled on the module when the SW flow control is used. If the UART power saving is active, the DC1/DC3 characters could be used to wake up the module's UART, and therefore lost. In case a DC3 character (XOFF) is correctly received by module's UART and some data is waiting to be transmitted, the module is forced to stay awake until a subsequent DC1 character (XON) is received.

TOBY-L2 / MPCI-L2 / LARA-R2 / TOBY-R2 / SARA-U2 / LISA-U2 / LISA-U1 / SARA-G3 / LEON-G1

- On the UART interface, in case of +UPSV: 2, only &K0 (no flow control) is allowed.

TOBY-L2

- The command setting is not displayed in the AT&V information text response.

TOBY-L200-02S / TOBY-L200-03A / TOBY-L200-03S / TOBY-L210-02S / TOBY-L210-03A / TOBY-L210-03S / TOBY-L210-62S / TOBY-L220 / TOBY-L280

- On the UART interface, in case of +UPSV: 1, the SW flow control shall not be set (<value>=4, 5 and 6 shall not be used).

- On the UART interface, in case of +UPSV: 2, the SW flow control is also supported (<value>=4, 5 and 6 are allowed), but the HW flow control is still forbidden (<value>=3 is not allowed).

TOBY-L201 / TOBY-L210-60S

- The SW flow control is not supported (<value>=4, 5 and 6 are not allowed).

TOBY-L200-00S / TOBY-L210-00S / MPCI-L2

- The command has no effect.

SARA-U201-04A / SARA-U201-04B / SARA-U201-04X / SARA-U270-04B

- On the AUX UART interface, the HW flow control is not supported (<value>=3 is not allowed).
- On the AUX UART interface, the default and factory-programmed value for <value> is 0.

SARA-G340-02S / SARA-G340-02X / SARA-G350-02A / SARA-G350-02S / SARA-G350-02X

- On the AUX UART interface, the HW flow control is not supported (<value>=3 is not allowed).
- On the AUX UART interface, the default and factory-programmed value for <value> is 0.

SARA-G4

- <value>=4,5,6 are not supported.
- On the UART interface, in case of +UPSV: 2, only &K0 (no flow control) is allowed.

15.5.5 SW flow control enhancement for PSD data transfer with PPP L2 protocol

☞ The software flow control enhancement is only supported on the UART interface.

☞ LISA-U200-01S / LISA-U230 / LISA-U260-01S / LISA-U270-01S / LISA-U1 / SARA-G3 / LEON-G1
The SW flow control enhancement is not supported.

The standard implementation of the UART XON/XOFF flow control is limited to DTE-DCE communications where the ASCII non-printable control characters are not transferred. This is an important limitation, since it is not possible to use it in case of the generic binary data transfer. An extension to a PPP L2 protocol data transfer has been done by exploiting the PPP octet stuffing procedure.

PPP Octet-stuffed framing and transparency

The PPP protocol implements an escape mechanism specified to allow control data such as XON/XOFF to be transparently transmitted over the link, and to remove spurious control data which may be injected into the link by intervening hardware and software.

The control escape octet is defined as binary 01111101 (hexadecimal 0x7d), most significant bit first. As a minimum, sending implementations must escape the flag sequence and control escape octets.

After Frame Check Sequence (FCS) computation, the transmitter examines the entire frame between the two flag sequences. Each flag sequence, control escape octet, and any octet which is flagged in the sending Async-Control - Character-Map (ACCM), is replaced by a two octet sequence consisting of the control escape octet followed by the original octet exclusive-or'd with hexadecimal 0x20.

The receiving implementations must correctly process all the control escape sequences. On the reception, prior to FCS computation, each octet with value less than hexadecimal 0x20 is checked. If it is flagged in the receiving ACCM, it is simply removed (it may have been inserted by intervening data communications equipment). Each control escape octet is also removed, and the following octet is exclusive-or'd with hexadecimal 0x20, unless it is the flag sequence (which aborts a frame).

ACCM negotiation for XON/XOFF chars during PPP LCP negotiation

The ACCM is negotiated in a LCP (Link Control Protocol, part of PPP protocol) configuration request. In particular the LCP Option 02 is used.

This option is described in the RFC 1662 and has the following format.

| 02 | 06 | Async Control Character Map |

This configuration option provides a method to negotiate the use of control character transparency on asynchronous links.

The module by default would start in any case requesting an ACCM sets to 0x00000000, which is incompatible with XON/XOFF flow control.

To overcome this situation, the ACCM negotiation handler should combine the value received in a Configure-Nak via a logical bitwise OR operation with the last configure-request value it sent. This result should then be sent in the next Configure-Request message. If a configure-request is received whose bit mask includes cleared bits for characters that the local implementation knows to be problematic (perhaps by way of an administrative option or some kind of hardware information), then it should send a Configure-Nak with the prior value modified to have these bits set.

Application to XON/XOFF flow control implementation in the module

The flow control characters DC1 and DC3 appears at arbitrary locations in the data stream received by the module. The module with software flow control active during a PPP session, discards these characters after modifying the flow control state (stopping or starting its own transmit process) and does not include them in any part of the received data or CRC calculation; in the transmitted data the module escapes the XON/XOFF characters if they appear in the transmitted PPP frame. They are transmitted on the link as follows:

0x11 is encoded as 0x7d, 0x31. (XON)

0x13 is encoded as 0x7d, 0x33. (XOFF)

PPP ACCM negotiation in the module firmware is implemented in the following way:

- If the XON/XOFF flow control is active on the UART when the PPP is invoked, the requested ACCM is 0x000A0000
- If the XON/XOFF flow control is not active on the UART when the PPP is invoked, the requested ACCM is 0x00000000

As soon as the LCP configuration phase is completed, the IPCP protocol (the network control protocol for establishing and configuring Internet Protocol over a Point-to-Point Protocol link) can start; from this point forward the negotiated ACCM are applied.

If SW flow control is enabled on the module, but the DTE requests a wrong ACCM setting (ACCM differs than 0x0A0000) the SW flow control is anyway effective during the data mode, that is the 0x11 and 0x13 is detected during data mode even if the ACCM is not properly set by the DTE during LCP configuration.

15.6 DTE-DCE character framing +ICF

+ICF						
Modules	TOBY-L2 MPCI-L2					
	LARA-R2 TOBY-R2					
	SARA-U2 LISA-U2 LISA-U1					
	SARA-G4 SARA-G3 LEON-G1					
Attributes	**Syntax**	**PIN required**	**Settings saved**	**Can be aborted**	**Response time**	**Error reference**
	partial	No	Profile	No	-	+CME Error

15.6.1 Description

Sets the local serial port start-stop (asynchronous) character framing which is used in information interchange between DCE and DTE. Value 0 corresponds to the auto-detect case (if autobauding is supported).

☞ The following restrictions must be reminded:

- If a data frame format refers to a frame without parity (ex. Format 3), the command is accepted, but the parity value is ignored; it is returned by the AT+ICF read command (and displayed by AT&V) but it has no meaning
- The command setting is ignored when the AT command interface runs on the USB or on the SPI interface

15.6.2 Syntax

Type	Syntax	Response	Example
Set	AT+ICF=[<format>[,<parity>]]	OK	AT+ICF=3,1 OK
Read	AT+ICF?	+ICF: <format>,<parity> OK	+ICF: 3,1 OK

Type	Syntax	Response	Example
Test	AT+ICF=?	+ICF: (list of supported <format>s), (list of supported <parity>s) OK	+ICF: (0-3,5),(0-1) OK

15.6.3 Defined values

Parameter	Type	Description
<format>	Number	• 0: auto detect • 1: 8 data 2 stop • 2: 8 data 1 parity 1 stop • 3: 8 data 1 stop • 4: 7 data 2 stops • 5: 7 bit, 1 parity, 1 stop • 6: 7 bit, 1 stop
<parity>	Number	• 0: odd • 1: even

15.6.4 Notes

TOBY-L200-00S / TOBY-L210-00S / MPCI-L2

- The command has no effect.

TOBY-L200-02S / TOBY-L200-03A / TOBY-L200-03S / TOBY-L201 / TOBY-L210-02S / TOBY-L210-03A / TOBY-L210-03S / TOBY-L210-60S / TOBY-L210-62S / TOBY-L220 / TOBY-L280

- Automatic frame recognition is not supported (<format> cannot be set to 0).
- The factory-programmed values are <format> = 3 and <parity> = 1.

LARA-R2 / TOBY-R2 / SARA-U2 / LISA-U2

- The <format> parameter cannot be set to 4 and 6.
- If the parameters are omitted they are set to <format> = 3 and <parity> = 1.
- The factory-programmed values are <format> = 3 and <parity> = 1.
- **Automatic frame recognition**

  If automatic baud rate detection (+IPR is set to 0) is enabled in the profile, the +ICF setting is not applied at start-up, and the read command returns the current detected frame format only after detection.
  - Automatic frame recognition is present together with automatic baud rate recognition
  - Since automatic frame recognition is implemented as "one shot", the AT+ICF=0 answers OK as final result code but does not switch the system to the automatic frame recognition and it does not take any actions. The read command always returns the current value of the frame format and the value of +ICF in the active profile is not changed
  - If automatic frame recognition is enabled, the read command returns the current (detected) frame setting even if the current active profile provides +ICF=0. To change the frame format at the next module power on issue the set command with the new setting and save it in the profile
  - The detectable frame configurations are: 7E1, 7O1, 8N1, 8E1, 8O1
  - The stop bit number cannot be automatically recognized i.e. if the system is switched from the 8N2 to the autodetect feature and a 1 stop bit frame is provided at the serial port, the system can behave unpredictably

LISA-U200-00S

- Automatic frame recognition is not supported (<format> cannot be set to 0).

SARA-G3 / LEON-G1

- The <format> parameter cannot be set to 4 and 6.
- If the parameters are omitted they are set to <format> = 0 and <parity> = 0.
- The factory-programmed values are <format> = 0 and <parity> = 0.
- **Automatic frame recognition**

  Frame recognition can only be present in conjunction with autobauding recognition, i.e. the AT+ICF=0 command is effective only if AT+IPR is set to 0. In this case the AT+ICF? returns a 0 value.

- Outside the autobauding conditions the AT+ICF=0 answers OK as final result code but does not switch the system to automatic frame recognition and it does not take any actions. In this scenario the AT+ICF? command returns the current value of the frame format. The AT+IPR=0 command instead forces the AT+ICF to 0
- Under autobauding conditions, the AT+ICF command provided with a value different than 0 provides an error result code since it is not possible to specify a frame type in these autodetect conditions
- The stop bit number cannot be automatically recognized i.e. if the system is switched from the 8N2 to the autodetect feature and an 1 stop bit frame is provided at the serial port, the system can behave unpredictably

SARA-G340-02S / SARA-G340-02X / SARA-G350-02A / SARA-G350-02S / SARA-G350-02X

- On the AUX UART interface, automatic frame recognition is not supported (<format> cannot be set to 0).
- On the AUX UART interface: the default and factory-programmed value for <format> is 3; the default and factory-programmed value for <parity> is 1.

SARA-G4

- <format>=0, 4, 5, 6 are not supported.
- The factory-programmed values are <format>= 3 and <parity>= 1.

15.7 DTE-DCE local flow control +IFC

+IFC						
Modules	TOBY-L2 MPCI-L2					
	LARA-R2 TOBY-R2					
	SARA-U2 LISA-U2 LISA-U1					
	SARA-G4 SARA-G3 LEON-G1					
Attributes	**Syntax**	**PIN required**	**Settings saved**	**Can be aborted**	**Response time**	**Error reference**
	full	No	Profile	No	-	+CME Error

15.7.1 Description

Controls the operation of the local flow control between DTE and DCE used when the data are sent or received.

The SW flow control (XON/XOFF) activation is only allowed in case of the text transmission: the binary data cannot be transmitted because it may contain the special flow control characters (XON/XOFF). For the SW flow control enhancement, allowing its usage during a PSD call with PPP L2 protocol, see SW flow control enhancement for PSD data transfer with PPP L2 protocol in the AT&K command description.

When the software flow control (XON/XOFF) is used, the DC1 (XON, 0x11) and DC3 (XOFF, 0x13) characters are reserved and therefore filtered (e.g. in SMS text mode these two characters can not be input).

Since the DTE-DCE communication relies on the correct reception of DC1/DC3 characters, the UART power saving should be disabled on the module when SW flow control is used. If the UART power saving is active, the DC1/DC3 characters could be used to wake up the module's UART, and therefore lost. In case a DC3 character (XOFF) is correctly received by module's UART and some data is waiting to be transmitted, the module is forced to stay awake until a subsequent DC1 character (XON) is received.

☞ The software flow control (XON/XOFF) setting is not allowed on the USB interfaces, on the SPI interface and on a multiplexer channel. See the Multiple AT command interfaces for all the behavior differences in respect to the supported interfaces.

15.7.2 Syntax

Type	Syntax	Response	Example
Set	AT+IFC=[<DCE_by_DTE>[,<DTE_by_DCE>]]	OK	AT+IFC=2,2 OK
Read	AT+IFC?	+IFC: <DCE_by_DTE>,<DTE_by_DCE> OK	+IFC: 2,2 OK

Type	Syntax	Response	Example
Test	AT+IFC=?	+IFC: (list of supported <DCE_by_DTE>),(list of supported <DTE_by_DCE>s) OK	+IFC: (0-2),(0-2) OK

15.7.3 Defined values

Parameter	Type	Description
<DCE_by_DTE>	Number	• 0: none • 1: DC1/DC3 on circuit 103 (XON/XOFF) • 2 (default and the factory-programmed value): circuit 105 (RTS)
<DTE_by_DCE>	Number	• 0: none • 1: DC1/DC3 on circuit 104 (XON/XOFF) • 2 (default and the factory-programmed value): circuit 106 (CTS)

15.7.4 Notes

- <DCE_by_DTE> and <DTE_by_DCE> parameters must be provided with the same value in pairs (only (0, 0), (1,1) and (2,2) are allowed. The other combinations are not allowed and the "+CME ERROR: operation not allowed" error result code is returned).

TOBY-L2 / MPCI-L2 / LARA-R2 / TOBY-R2 / SARA-U2 / LISA-U2 / LISA-U1 / SARA-G3 / LEON-G1

- On the UART interface, in case of +UPSV: 2, only +IFC=0,0 (no flow control) is allowed.

TOBY-L200-02S / TOBY-L200-03A / TOBY-L200-03S / TOBY-L210-02S / TOBY-L210-03A / TOBY-L210-03S / TOBY-L210-62S / TOBY-L220 / TOBY-L280

- On the UART interface, in case of +UPSV: 1, the SW flow control shall not be set (<DCE_by_DTE> and <DTE_by_DCE> shall not be set to 1).
- On the UART interface, in case of +UPSV: 2, the SW flow control is also supported (<DCE_by_DTE> and <DTE_by_DCE> can be set to 1), but the HW flow control is still forbidden (<DCE_by_DTE> and <DTE_by_DCE> cannot be set to 2).

TOBY-L201 / TOBY-L210-60S

- The SW flow control is not supported (<DCE_by_DTE> and <DTE_by_DCE> cannot be set to 1).

TOBY-L200-00S / TOBY-L210-00S / MPCI-L2

- The command has no effect.

SARA-U201-04A / SARA-U201-04B / SARA-U201-04X / SARA-U270-04B

- On the AUX UART interface, the HW flow control is not supported (<DCE_by_DTE> and <DTE_by_DCE> cannot be set to 2).
- On the AUX UART interface, the default and factory-programmed value for <DCE_by_DTE> and <DTE_by_DCE> is 0.

SARA-G340-02S / SARA-G340-02X / SARA-G350-02A / SARA-G350-02S / SARA-G350-02X

- On the AUX UART interface, the HW flow control is not supported (<DCE_by_DTE> and <DTE_by_DCE> cannot be set to 2).
- On the AUX UART interface, the default and factory-programmed value for <DCE_by_DTE> and <DTE_by_DCE> is 0.

SARA-G4

- On the UART interface, in case of +UPSV: 2, only +IFC=0,0 (no flow control) is allowed.
- <DCE_by_DTE>=1 is not supported.
- <DTE_by_DCE>=1 is not supported.

15.8 Set flow control \Q

\Q						
Modules	TOBY-L200-02S TOBY-L200-03A TOBY-L200-03S TOBY-L201 TOBY-L210-02S TOBY-L210-03A TOBY-L210-03S TOBY-L210-60S TOBY-L210-62S TOBY-L220 TOBY-L280 MPCI-L200-02S MPCI-L200-03S MPCI-L201 MPCI-L210-02S MPCI-L210-03S MPCI-L210-60S MPCI-L220 MPCI-L280					
	LARA-R2 TOBY-R2					
	SARA-U2 LISA-U2 LISA-U1					
	SARA-G3 LEON-G1					
Attributes	**Syntax**	**PIN required**	**Settings saved**	**Can be aborted**	**Response time**	**Error reference**
	full	No	No	No	-	+CME Error

15.8.1 Description

Controls the operation of the local flow control between DTE and DCE. It is used when the data are sent or received.

The SW flow control (XON/XOFF) activation is only allowed in case of the text transmission: the binary data cannot be transmitted because it may contain the special flow control characters (XON/XOFF). For the SW flow control enhancement, allowing its usage during a PSD call with PPP L2 protocol, see the SW flow control enhancement for PSD data transfer with PPP L2 protocol in the AT&K command description.

When the software flow control (XON/XOFF) is used, the DC1 (XON, 0x11) and DC3 (XOFF, 0x13) characters are reserved and therefore filtered (e.g. in SMS text mode these two characters can not be input).

Since the DTE-DCE communication relies on the correct reception of DC1/DC3 characters, the UART power saving should be disabled on the module when SW flow control is used. If the UART power saving is active, the DC1/DC3 characters could be used to wake up the module's UART, and therefore lost. In case a DC3 character (XOFF) is correctly received by module's UART and some data is waiting to be transmitted, the module is forced to stay awake until a subsequent DC1 character (XON) is received.

☞ The software flow control (XON/XOFF) setting is not allowed on the USB interfaces, on the SPI interface and on a multiplexer channel. See the Multiple AT command interfaces for all the behavior differences in respect to the supported interfaces.

☞ TOBY-L2 / MPCI-L2 / LARA-R2 / TOBY-R2 / SARA-U2 / LISA-U2 / LISA-U1 / SARA-G3 / LEON-G1
On the UART interface, in case of +UPSV: 2, only \Q0 (no flow control) is allowed.

15.8.2 Syntax

Type	Syntax	Response	Example
Set	AT\Q[<value>]	OK	AT\Q3 OK

15.8.3 Defined values

Parameter	Type	Description
<value>	Number	• 0: no flow control • 1: DC1/DC3 on circuit 103 and 104 (XON/XOFF) • 3 (default value): DCE_by_DTE on circuit 105 (RTS) and DTE_by_DCE on circuit 106 (CTS)

15.8.4 Notes

TOBY-L200-02S / TOBY-L200-03A / TOBY-L200-03S / TOBY-L210-02S / TOBY-L210-03A / TOBY-L210-03S / TOBY-L210-62S / TOBY-L220 / TOBY-L280

- On the UART interface, in case of +UPSV=1, the SW flow control shall not be set (<value> shall not be set to 1).
- On the UART interface, in case of +UPSV=2, the SW flow control is also supported (<value> can be set to 1), but HW flow control is still forbidden (<value> cannot be set to 3).

TOBY-L201 / TOBY-L210-60S

- The SW flow control is not supported (<value> cannot be set to 1).

TOBY-L200-00S / TOBY-L210-00S / MPCI-L2

- The command has no effect.

SARA-U201-04A / SARA-U201-04B / SARA-U201-04X / SARA-U270-04B

- On the AUX UART interface, the HW flow control is not supported (<value> cannot be set to 3).
- On the AUX UART interface, the default value for <value> is 0.

SARA-G340-02S / SARA-G340-02X / SARA-G350-02A / SARA-G350-02S / SARA-G350-02X

- On the AUX UART interface, the HW flow control is not supported (<value> cannot be set to 3).
- On the AUX UART interface, the default value for <value> is 0.

15.9 UART data rate configuration +IPR

+IPR						
Modules	TOBY-L2 MPCI-L2					
	LARA-R2 TOBY-R2					
	SARA-U2 LISA-U2 LISA-U1					
	SARA-G4 SARA-G3 LEON-G1					
Attributes	**Syntax**	**PIN required**	**Settings saved**	**Can be aborted**	**Response time**	**Error reference**
	partial	No	Profile	No	-	+CME Error

15.9.1 Description

Specifies the data rate at which the DCE accepts commands on the UART interface. The full range of data rates depends on HW or other criteria.

When supported, the autobauding feature allows baud rate recognition by the DCE when it operates in command mode.

☞ The command settings are ignored when the AT command interface runs either on the USB or on the SPI interface. The DCE sends the "OK" final result code but the command will have no effect.

15.9.2 Syntax

Type	Syntax	Response	Example
Set	AT+IPR=[<rate>]	OK	AT+IPR=9600 OK
Read	AT+IPR?	+IPR: <rate> OK	+IPR: 9600 OK
Test	AT+IPR=?	+IPR: (list of supported autodetectable <rate> values)[,(list of fixed only <rate> values)] OK	+IPR: (0,2400,4800,9600,19200, 38400,57600,115200),() OK

15.9.3 Defined values

Parameter	Type	Description
<rate>	Number	Baud rate • 0 (factory-programmed value): autobauding • 1200, 2400, 4800, 9600, 19200, 38400, 57600, 115200 (default value), 230400, 460 800, 921600, 3000000, 3250000, 6000000, 6500000

15.9.4 Notes

- On the UART AT interface, after the reception of the "OK" result code for the +IPR command, the DTE shall wait for at least 100 ms before issuing a new AT command; this is to guarantee a proper baud rate reconfiguration.

TOBY-L2 / MPCI-L2

- <rate>= 1200, 2400, 4800, 3000000, 3250000, 6000000, 6500000 b/s are not supported.

TOBY-L200-00S / TOBY-L210-00S / MPCI-L200-00S / MPCI-L210-00S

- The command has no effect.

LARA-R2 / TOBY-R2

- <rate>= 1200, 2400, 4800 b/s are not supported.

SARA-U2 / LISA-U2 / LISA-U1

- <rate>= 3000000, 3250000, 6000000, 6500000 b/s are not supported.

LISA-U200-00S / LISA-U1

- Automatic baud rate detection is not implemented (<rate>=0 is not supported).
- The factory-programmed value for <rate> is 115200.
- <rate>= 921600 cannot be set as fixed rate.

SARA-G4 / SARA-G3 / LEON-G1

- <rate>= 1200, 230400, 460800, 921600, 3000000, 3250000, 6000000, 6500000 b/s are not supported.
- The default value for <rate> is 0.

SARA-G340-02S / SARA-G340-02X / SARA-G350-02A / SARA-G350-02S / SARA-G350-02X

- On the AUX UART interface, the automatic baud rate detection is not implemented (<rate>=0 is not supported).
- On the AUX UART interface, the factory-programmed value for <rate> is 115200.

15.9.5 Autobauding description

TOBY-L2 / MPCI-L2

Only one shot automatic baud rate detection is implemented. If enabled, the module provides autobauding capability only at module start-up, and keeps it active until a first recognition is completed. Later on, it works at the fixed baud rate (the detected one).

- If automatic baud rate detection is set in the active memory profile, the baud rate is detected once at the module power on.
- Since autobauding is implemented as "one shot" autobauding, any setting of +IPR=0 should be avoided; the only exception is in case the autobauding setting has been replaced by a fixed rate setting in the stored profile. In this case the module has started without autobauding and the host needs to reactivate it.
- If the module starts with the autobauding active, after the detection, the +IPR read command returns the detected baud rate, while the +IPR value in the active profile (displayed as result of AT&V) does not change (it continues to be 0, otherwise the +IPR setting should be changed every time an AT command setting is changed and the profile saved in the NVM via the AT&W command). As a result, the only way to change the +IPR value in the profile is by issuing an +IPR set command (e.g. AT+IPR=115200 sets a fixed rate on the UART and determines a start-up at a fixed rate of 115200 b/s in case the active profile is saved via AT&W).
- After AT+IPR=0, the run-time configuration of the AT interface is updated (AT&V shows the new setting in the active profile), but the setting is effective only at the next start-up (if and only if the active configuration is saved in the stored AT profile).
- As a consequence of the previous point, if AT+IPR=0 is issued the +IPR read command continues to return the current set baud rate (and not the 0 value). This is an exception and it creates a discrepancy between the value in the profile and the value returned by the +IPR read command, but it allows autobauding re-activation and a coherent result of the +IPR read command.
- Autobauding values which can be detected are 9600, 19200, 38400, 57600, 115200, 230400, 460800, 921600 b/s. This range is the same of fixed rates baud rates. AT commands provided with a baud rate other than values declared, cannot be properly acquired and recognized by the module, and are discarded.
- If the system starts in autobauding (i.e. the +IPR is 0) the first "a" or "A" character provided to the module detects the baud rate. For example the first command sent from the DTE at any rate can be: AT +CPIN="1234".
  Characters different than "a" or "A" are ignored (even if they could be used for the detection), the detection is considered failed, and it is retriggered. In this situation, all the data received before autobauding retriggering is flushed (that is, completely ignored). Every two characters' string starting with 'A' or 'a' can be used for the baud rate detection. But this is not a requirement violation, since it makes sense assuming that a DTE application starts every communication with an "AT" or "at".
  - The echo is produced or not according to ATE configuration. The echo is only produced for a valid detection sequence.

  - The module generates a response for the DTE once the autobauding detection is successful, the command has been accepted and the command response is available. Therefore, even if the detection was actually successful a certain amount of time before, it is only possible to assume that the detection phase was successful after a response.
  - If no response is received by the DTE after some time, it must retry (the timeout value should be adjustable inside the DTE application). In any case it is suggested to use a very simple command as the first command, for which the execution time is short and almost constant (e.g. ATE).
- If automatic baud rate detection is active, greeting text or URCs before baud rate detection are not sent but buffered. They are sent as first data at the detected baud rate as soon as detection is completed (before any echo of the command or response). The greeting text is sent at the specified baud rate only when the baud rate setting in the profile is other than autobauding.
- <rate>=0 does not affect the AT+ICF command (character framing configuration), since the automatic frame recognition is not supported.

LARA-R2 / TOBY-R2 / SARA-U2 / LISA-U2 / LISA-U1

Only one shot automatic baud rate detection is implemented. If enabled, the module provides autobauding capability only at module start-up, and keeps it active until a first recognition is completed. Later on, it works at the fixed baud rate (the detected one).

- If automatic baud rate detection is set in the active memory profile, the baud rate is detected once at the module power on
- Since autobauding is implemented as "one shot" autobauding, any setting of +IPR=0 should be avoided; the only exception is in case the autobauding setting has been replaced by a fixed rate setting in the stored profile. In this case the module has started without autobauding and the host needs to reactivate it
- If the module starts with the autobauding active, after the detection, the +IPR read command returns the detected baud rate, while the +IPR value in the active profile (displayed as result of AT&V) does not change (it continues to be 0, otherwise the +IPR setting should be changed every time an AT command setting is changed and the profile saved in the NVM via the AT&W command). As a result, the only way to change the +IPR value in the profile is by issuing an +IPR set command (e.g. AT+IPR=115200 sets a fixed rate on the UART and determines a start-up at a fixed rate of 115200 b/s in case the active profile is saved via AT&W)
- After AT+IPR=0, the run-time configuration of the AT interface is updated (AT&V shows the new setting in the active profile), but the setting is effective only at the next start-up (if and only if the active configuration is saved in the stored AT profile)
- As a consequence of the previous point, if AT+IPR=0 the +IPR read command continues to return the current set baud rate (and not the 0 value). This is an exception and it creates a discrepancy between the value in the profile and the value returned by the +IPR read command, but it allows autobauding re-activation and a coherent result of the +IPR read command
- Autobauding values which can be detected are:
  - LARA-R2 / TOBY-R2 series - 9600, 19200, 38400, 57600, 115200, 230400 b/s
  - SARA-U2 / LISA-U2 / LISA-U1 series - 1200, 2400, 4800, 9600, 19200, 38400, 57600, 115200, 230400 b/s

  This means that baud rate 460800 and 921600 b/s cannot be automatically detected by DCE and must only be set as a fixed rate (via +IPR AT command). AT commands provided with a baud rate other than values declared, cannot be properly acquired and recognized by the module, and are discarded
- If the system starts in autobauding (i.e. the <rate> parameter of +IPR is 0) the first "at" sequence provided to the module detects the baud rate. For example the first command sent from the DTE at any rate can be: AT+CPIN="1234"

  Characters different than "AT" are ignored during the baud rate detection since the hardware detection sequence is triggered on the "at" or "AT" sequence. "At" or "aT" sequences are invalid: both detection characters must be small or capital:
  - The echo is produced or not according to ATE configuration. The echo is only produced for a valid detection string and only after the detection completion, that is there will be a one character delay between the received characters and the echo generation (the echo will start only after "at" or "AT" reception)
  - The echo is always "AT" regardless of the detection string sent by DTE
  - The module generates a response for the DTE once autobauding detection is successful, the command has been accepted and the command response is available. Therefore, even if the detection was actually successful a certain amount of time before, it is only possible to assume that the detection phase was successful after a response

  - If no response is received by the DTE after some time, it must retry (the timeout value should be adjustable inside the DTE application). In any case it is suggested to use a very simple command as the first command, for which the execution time is short and almost constant (e.g. ATE)
- If the UART power saving is enabled, the command for the baud rate detection should be sent to the DTE before the module enters idle mode for the first time
- Autobauding result can be unpredictable with spurious characters if power saving is entered and the flow control is disabled. If the hardware flow control is present, the DTE can be synchronized with the power saving cycle through the module CTS line i.e. the delivery of the "AT" sequence during the module wake up can be granted by the DTE and power saving can be exited correctly. Disable the power saving if no hardware flow control is set at start up
- If automatic baud rate detection is active, greeting text or URCs before baud rate detection are not sent but buffered. They are sent as first data at the detected baud rate as soon as detection is completed (before any echo of the command or response). The greeting text is sent at the specified baud rate only when the baud rate setting in the profile is other than autobauding
- <rate>=0 affects the AT+ICF command (character framing configuration). See the AT+ICF command description for further limitations.

SARA-G3 / LEON-G1
The following notes related to autobauding must be reminded:

- At the module power on the autobauding can be by default enabled (necessary to program the stored AT profile with the baud rate parameter set to 0) or set with the AT+IPR=0 command if the DCE started with a fixed rate
- Autobauding values which can be discovered are the same of the fixing case i.e. 2400, 4800, 9600, 19200, 38400, 57600, 115200 b/s. AT commands provided with a baud rate other than values declared, cannot be properly acquired and recognized by the module, and are discarded
- If the system starts in autobauding (i.e. the <rate> parameter of +IPR is 0) the first "at" sequence provided to the module detects the baud rate. For example the first command sent from the DTE at any rate can be: AT+CPIN="1234"
- Characters different than AT are ignored during the baud rate detection since the hardware detection sequence is triggered on the "at" or "AT" sequence. "At" or "aT" sequences are invalid too, both of the detection characters must be small or capital
- Power saving is exited at the 'A' (or 'a') character of the autobauding sequence; power save state is re-entered again when the power saving timeout is elapsed, regardless if the baud detection is complete or not. The 'T' (or 't') character does not reset the power saving timer; as a result if the detection completion character is sent outside power save condition, it does not force to stay out of power saving state for the number of frames of power saving timer
- Autobauding result can be unpredictable with spurious characters if the power saving is entered and the flow control is disabled (AT&K0). If the hardware flow control is present, the DTE can be synchronized with the power saving cycle through the module CTS line i.e. the delivery of the "AT" sequence during the module awake can be granted by the DTE and the power saving can be exited in the proper way. It is recommended to disable the power saving if no hardware flow control is used
- <rate>=0 affects the AT+ICF command (character framing configuration) too which <format> and <parity> parameters are automatically switched to the 0 value. See the AT+ICF command description for further limitations
- When autobauding and echo are enabled (+IPR=0, ATE1), there is an hardware loopback between UART TXD and RXD lines until a "AT" (or "at") sequence detection. This means that all the characters before and including the "AT" (or "at") sequence will be retransmitted on the RXD line also if hardware flow control is enabled and the RTS line is OFF.

SARA-G4
The following notes related to autobauding must be reminded:

- At the module power on the autobauding can be by default enabled (necessary to program the stored AT profile with the baud rate parameter set to 0) or set with the AT+IPR=0 command if the DCE started with a fixed rate
- Autobauding values which can be discovered are the same of the fixing case i.e. 2400, 4800, 9600, 19200, 38400, 57600, 115200 b/s. AT commands provided with a baud rate other than values declared, cannot be properly acquired and recognized by the module, and are discarded
- In order to synchronyze the UART interface, issue the first AT command with the "AT" string in uppercase

- Characters different than AT are ignored during the baud rate detection since the hardware detection sequence is triggered on the "AT" sequence. "At" or "aT" sequences are invalid too, both of the detection characters must be capital
- Autobauding result can be unpredictable with spurious characters if the power saving is entered and the flow control is disabled (AT&K0). If the hardware flow control is present, the DTE can be synchronized with the power saving cycle through the module CTS line i.e. the delivery of the "AT" sequence during the module awake can be granted by the DTE and the power saving can be exited in the proper way. It is recommended to disable the power saving if no hardware flow control is used

15.10 Return to on-line data state O

O						
Modules	TOBY-L2 MPCI-L2					
	LARA-R2 TOBY-R2					
	SARA-U2 LISA-U2 LISA-U1					
	SARA-G4 SARA-G3 LEON-G1					
Attributes	**Syntax**	**PIN required**	**Settings saved**	**Can be aborted**	**Response time**	**Error reference**
	full	Yes	No	No	-	+CME Error

15.10.1 Description

Causes the DCE to return to online data state and issue a CONNECT or CONNECT <text> (based on ATX command) intermediate result code on DTE. It is the complementary command to the escape sequence, or to the other actions (DTR ON to OFF transition, see table in Chapter 15.3.5) that cause the DCE to switch from online data state to online command state.

ATO command is used to resume both circuit-switched and packet-switched data call. The resume is only possible if the PPP L2 protocol is used.

15.10.2 Syntax

Type	Syntax	Response	Example
Action	ATO	<response>	ATO CONNECT

15.10.3 Defined values

Parameter	Type	Description
<response>	String	• CONNECT • NO CARRIER: the online data state cannot be resumed

15.10.4 Notes

- The command provides an error result code ("+CME ERROR: operation not allowed" if +CMEE is set to 2) in the following cases:
  - The DCE is not in online command state
  - It is issued on a DCE different from the one in online command state
- In case of PSD call, any data from the network (downlink data) received by the DCE during the on-line command state is discarded. This means that after the O command and on-line data state resume, any possible data loss has to be recovered by upper layer protocols (e.g. TCP).

TOBY-L200-00S / TOBY-L210-00S / MPCI-L200-00S / MPCI-L210-00S

- The command has not effect since the online command mode is not supported.

SARA-U201-04A / SARA-U201-04B / SARA-U201-04X / SARA-U270-04B

- On the AUX UART interface, the command is not supported.

SARA-G340-02S / SARA-G340-02X / SARA-G350-02A / SARA-G350-02S / SARA-G350-02X

- On the AUX UART interface, the command is not supported.

15.11 Escape character S2

S2						
Modules	TOBY-L2 MPCI-L2					
	LARA-R2 TOBY-R2					
	SARA-U2 LISA-U2 LISA-U1					
	SARA-G4 SARA-G3 LEON-G1					
Attributes	**Syntax**	**PIN required**	**Settings saved**	**Can be aborted**	**Response time**	**Error reference**
	partial	No	Profile	No	-	+CME Error

15.11.1 Description

Controls the decimal value of the ASCII character used as the escape character. A value greater than 127 disables the escape process, i.e. no escape character will be recognized. The escape sequence contains three escape characters e.g. "+++".

15.11.2 Syntax

Type	Syntax	Response	Example
Set	ATS2=<value>	OK	ATS2=43 OK
Read	ATS2?	<value> OK	043 OK

15.11.3 Defined values

Parameter	Type	Description
<value>	Number	Range 1 to 255. The answer to the read command is in "xxx" format. The default and the factory-programmed value is 43 (ASCII '+').

15.11.4 Notes

TOBY-L2 / MPCI-L2 / LARA-R2 / TOBY-R2 / SARA-U2 / LISA-U2 / LISA-U1 / SARA-G4 / SARA-G3 / LEON-G1

- The following table shows how the ATS2 command works for different data call scenarios.

Data call command	L2 protocol	Description	ATS2 behavior
AT+CGDATA="M-HEX",1	HEX	u-blox specific	Escape sequence detection is only done for +++ (plus carriage return). ATS2 is not effective. No timing constraints.
AT+CGDATA="M-RAW_IP",1	RAW-IP	PSD call: Transfer IP packet directly	Break detection is not supported
AT+CGDATA="PPP",1	PPP	PSD call: Same of ATD*99***1# (e.g. dial-up)	Escape sequence detection is only done for ~+++. ATS2 is not effective. There is not a timing constraint (see the S12 AT command) for ~+++ (++ + is incapsulated in a PPP frame)
ATD1234		CSD call	The command is effective if issued in both command and online command mode
AT+USODL=0		PSD call: Direct Link mode	The command is effective
AT+USOWR=0,3		PSD call: AT socket (not transparent)	Break detection is not supported

Table 20: ATS2 handling for different data call scenarios

SARA-G4 / SARA-G3 / LEON-G1

- The <value> parameter is not mandatory.

TOBY-L200-00S / TOBY-L210-00S / MPCI-L200-00S / MPCI-L210-00S

- The command has no effect.

15.12 Command line termination character S3

S3						
Modules	TOBY-L2 MPCI-L2					
	LARA-R2 TOBY-R2					
	SARA-U2 LISA-U2 LISA-U1					
	SARA-G4 SARA-G3 LEON-G1					
Attributes	**Syntax**	**PIN required**	**Settings saved**	**Can be aborted**	**Response time**	**Error reference**
	partial	No	Profile	No	-	+CME Error

15.12.1 Description

Sets a value representing the decimal IRA5 value of the character recognized by the DCE from the DTE, to terminate the incoming command line. It is also generated by the DCE as part of the header, trailer and terminator for result codes and information text, along with the S4 setting.

15.12.2 Syntax

Type	Syntax	Response	Example
Set	ATS3=<value>	OK	ATS3=13 OK
Read	ATS3?	<value> OK	013 OK

15.12.3 Defined values

Parameter	Type	Description
<value>	Number	Range 0 to 127. The answer to the read command is in "xxx" format. The default and the factory-programmed value is 13 (ASCII carriage return (CR, IRA5 0/13)).

15.12.4 Notes

SARA-G4 / SARA-G3 / LEON-G1

- The <value> parameter is not mandatory.

15.13 Response formatting character S4

S4						
Modules	TOBY-L2 MPCI-L2					
	LARA-R2 TOBY-R2					
	SARA-U2 LISA-U2 LISA-U1					
	SARA-G4 SARA-G3 LEON-G1					
Attributes	**Syntax**	**PIN required**	**Settings saved**	**Can be aborted**	**Response time**	**Error reference**
	partial	No	Profile	No	-	+CME Error

15.13.1 Description

Sets a value representing the decimal IRA5 value of the character generated by the DCE as part of the header, trailer and terminator for result codes and information text, along with the S3 setting.

15.13.2 Syntax

Type	Syntax	Response	Example
Set	ATS4=<value>	OK	ATS4=10 OK
Read	ATS4?	<value>	010

Type	Syntax	Response	Example
		OK	OK

15.13.3 Defined values

Parameter	Type	Description
<value>	Number	Range 0 to 127. The answer to the read command is in "xxx" format. The default and the factory-programmed value is 10 (line feed (LF, IRA5 0/10)).

15.13.4 Notes

SARA-G4 / SARA-G3 / LEON-G1

- The <value> parameter is not mandatory.

15.14 Command line editing character S5

S5						
Modules	TOBY-L2 MPCI-L2					
	LARA-R2 TOBY-R2					
	SARA-U2 LISA-U2 LISA-U1					
	SARA-G4 SARA-G3 LEON-G1					
Attributes	**Syntax**	**PIN required**	**Settings saved**	**Can be aborted**	**Response time**	**Error reference**
	partial	No	Profile	No	-	+CME Error

15.14.1 Description

Sets a value representing the decimal IRA5 character recognized by the DCE as a request to delete from the command line the immediately preceding character.

15.14.2 Syntax

Type	Syntax	Response	Example
Set	ATS5=<value>	OK	ATS5=8 OK
Read	ATS5?	<value> OK	008 OK

15.14.3 Defined values

Parameter	Type	Description
<value>	Number	Range 0 to 127. The answer to the read command is in "xxx" format. The default and the factory-programmed value is 8 (ASCII backspace (BS, IRA5 0/8)).

15.14.4 Notes

SARA-G4 / SARA-G3 / LEON-G1

- The <value> parameter is not mandatory.

15.15 Pause before blind dialling S6

S6						
Modules	TOBY-L2 MPCI-L2					
	LARA-R2 TOBY-R2					
	SARA-U2 LISA-U2 LISA-U1					
	SARA-G4 SARA-G3 LEON-G1					
Attributes	**Syntax**	**PIN required**	**Settings saved**	**Can be aborted**	**Response time**	**Error reference**
	partial	No	No	No	-	+CME Error

15.15.1 Description

Specifies the time in seconds that the DCE waits between connecting to the line and dialling, when the dial tone is not implemented or enabled. The command is not applicable for signal based mobile phone software.

15.15.2 Syntax

Type	Syntax	Response	Example
Set	ATS6=<value>	OK	ATS6=2 OK
Read	ATS6?	<value> OK	002 OK

15.15.3 Defined values

Parameter	Type	Description
<value>	Number	Range 2 - 10. The answer to the read command is in "xxx" format. The default value is 2 s.

15.15.4 Notes

SARA-G4 / SARA-G3 / LEON-G1

- The <value> parameter is not mandatory.

15.16 Connection completion timeout S7

S7						
Modules	TOBY-L2 MPCI-L2					
	LARA-R2 TOBY-R2					
	SARA-U2 LISA-U2 LISA-U1					
	SARA-G4 SARA-G3 LEON-G1					
Attributes	**Syntax**	**PIN required**	**Settings saved**	**Can be aborted**	**Response time**	**Error reference**
	partial	No	Profile	No	-	+CME Error

15.16.1 Description

Specifies the time in seconds, that the DCE shall allow between either answering a call or completion of dialling and establishment of a connection with a remote site.

15.16.2 Syntax

Type	Syntax	Response	Example
Set	ATS7=<value>	OK	ATS7=30 OK
Read	ATS7?	<value> OK	060 OK

15.16.3 Defined values

Parameter	Type	Description
<value>	Number	Range 1 - 255. The answer to the read command is in "xxx" format. The default and the factory-programmed value is 60 s.

15.16.4 Notes

LARA-R2 / TOBY-R2

- In case of a VoLTE call the connection completion timer does not start and these values will be applied:
  - VoLTE MT call: 50 s
  - VoLTE MO call: 185 s
- In case of alerting-SRVCC the connection completion timer starts accordingly the AT command setting.

SARA-G4 / SARA-G3 / LEON-G1

- The <value> parameter is not mandatory.

15.17 Command dial modifier time S8

S8						
Modules	TOBY-L2 MPCI-L2					
	LARA-R2 TOBY-R2					
	SARA-U2 LISA-U2 LISA-U1					
	SARA-G4 SARA-G3 LEON-G1					
Attributes	**Syntax**	**PIN required**	**Settings saved**	**Can be aborted**	**Response time**	**Error reference**
	partial	No	No	No	-	+CME Error

15.17.1 Description

Specifies the amount of time, in seconds, that the DCE shall pause during dialling, when a ',' (comma) dial modifier is encountered in a dial string.

☞ The command has no effect.

15.17.2 Syntax

Type	Syntax	Response	Example
Set	ATS8=<value>	OK	ATS8=4 OK
Read	ATS8?	<value> OK	002 OK

15.17.3 Defined values

Parameter	Type	Description
<value>	Number	Range 0 - 255. The answer to the read command is in "xxx" format. The default value is 2.

15.17.4 Notes

SARA-G4 / SARA-G3 / LEON-G1

- The <value> parameter is not mandatory.

15.18 Automatic disconnect delay S10

S10						
Modules	TOBY-L2 MPCI-L2					
	LARA-R2 TOBY-R2					
	SARA-U2 LISA-U2 LISA-U1					
	SARA-G4 SARA-G3 LEON-G1					
Attributes	**Syntax**	**PIN required**	**Settings saved**	**Can be aborted**	**Response time**	**Error reference**
	partial	No	No	No	-	+CME Error

15.18.1 Description

Specifies the time in tenth of a second, that the DCE will remain connected to the line after the DCE has indicated the absence of received line signal. Not supported for GSM but the OK response is returned.

15.18.2 Syntax

Type	Syntax	Response	Example
Set	ATS10=<value>	OK	ATS10=30 OK
Read	ATS10?	<value> OK	030 OK

15.18.3 Defined values

Parameter	Type	Description
<value>	Number	Range 1 - 254. Default: 1

15.18.4 Notes

SARA-G4 / SARA-G3 / LEON-G1

- The <value> parameter is not mandatory.

15.19 Escape prompt delay (EPD) S12

S12						
Modules	TOBY-L2 MPCI-L2					
	LARA-R2 TOBY-R2					
	SARA-U2 LISA-U2 LISA-U1					
	SARA-G4 SARA-G3 LEON-G1					
Attributes	**Syntax**	**PIN required**	**Settings saved**	**Can be aborted**	**Response time**	**Error reference**
	partial	No	No	No	-	+CME Error

15.19.1 Description

Defines the maximum period, in fiftieths of a second, allowed between the reception of the last character of the sequence of three escape characters from the DTE and the sending of the OK result code to the DTE. If any characters are detected during this time, the OK will not be sent.

Furthermore, the timeout is:

- The minimum period, before the first character reception of the three escape character sequence, during which no other character must be detected to accept it as a valid first character
- The maximum period allowed between receipt of first, or second, character of the three escape character sequence and receipt of the next
- The minimum period, after the last character reception of the three escape character sequence, during which no other character must be detected to accept the escape sequence as a valid one

15.19.2 Syntax

Type	Syntax	Response	Example
Set	ATS12=<value>	OK	ATS12=80 OK
Read	ATS12?	<value> OK	050 OK

15.19.3 Defined values

Parameter	Type	Description
<value>	Number	Range 0 - 255. The answer to the read command is in "xxx" format. The default value is 50 (1 s)

15.19.4 Notes

SARA-G4 / SARA-G3 / LEON-G1

- The <value> parameter is not mandatory.

TOBY-L200-00S / TOBY-L210-00S / MPCI-L200-00S / MPCI-L210-00S

- The command has not effect.

15.20 Command echo E

E						
Modules	All products					
Attributes	**Syntax**	**PIN required**	**Settings saved**	**Can be aborted**	**Response time**	**Error reference**
	full	No	Profile	No	-	+CME Error

15.20.1 Description

Controls whether or not the MT echoes characters received from the DTE during command state.

15.20.2 Syntax

Type	Syntax	Response	Example
Set	ATE[<value>]	OK	ATE1 OK

15.20.3 Defined values

Parameter	Type	Description
<value>	Number	• 0: echo off • 1 (default and the factory-programmed value): echo on

15.21 Result code suppression Q

Q						
Modules	All products					
Attributes	**Syntax**	**PIN required**	**Settings saved**	**Can be aborted**	**Response time**	**Error reference**
	full	No	Profile	No	-	+CME Error

15.21.1 Description

Determines if DCE transmits result codes to the DTE or not. When result codes are being suppressed, no portion of any intermediate, final or URC is transmitted. Information text transmitted in response to commands is not affected by this setting.

15.21.2 Syntax

Type	Syntax	Response	Example
Set	ATQ[<value>]	OK	ATQ1 OK

15.21.3 Defined values

Parameter	Type	Description
<value>	Number	• 0 (default and the factory-programmed value): DCE transmits result codes • 1: Result codes are suppressed and not transmitted

15.22 DCE response format V

V						
Modules	All products					
Attributes	**Syntax**	**PIN required**	**Settings saved**	**Can be aborted**	**Response time**	**Error reference**
	full	No	Profile	No	-	+CME Error

15.22.1 Description

Control the contents of the header and trailer transmitted with result codes and information text responses. It also determines whether the result code is transmitted in a numeric form or an alphabetic (or verbose) form. The information text response is not affected by this setting. See Information text responses and result codes for description of the result code formats.

15.22.2 Syntax

Type	Syntax	Response	Example
Set	ATV[<value>]	OK	ATV1 OK

15.22.3 Defined values

Parameter	Type	Description
<value>	Number	• 0: DCE transmits limited headers, trailers and numeric text • 1 (default and the factory-programmed value): DCE transmits full headers, trailers and verbose response text

15.23 Result code selection and call progress monitoring control X

X						
Modules	LARA-R2 TOBY-R2					
	SARA-U2 LISA-U2 LISA-U1					
	SARA-G3 LEON-G1					
Attributes	**Syntax**	**PIN required**	**Settings saved**	**Can be aborted**	**Response time**	**Error reference**
	full	No	Profile	No	-	+CME Error

15.23.1 Description

In a CS data call, determines how the DCE transmits to the DTE the CONNECT result code.

15.23.2 Syntax

Type	Syntax	Response	Example
Set	ATX[<value>]	OK	ATX1 OK

15.23.3 Defined values

Parameter	Type	Description
<value>	Number	• 0: CONNECT result code is given upon entering online data state; • 1-4: CONNECT <speed> result code is given upon entering online data state; (4 is the default and the factory-programmed value)
<speed>	Number	Transfer speed for CSD calls configured via the CBST command

15.24 Reset to default configuration Z

Z						
Modules	All products					
Attributes	**Syntax**	**PIN required**	**Settings saved**	**Can be aborted**	**Response time**	**Error reference**
	full	No	No	No	-	+CME Error

15.24.1 Description

Resets the DCE configuration into a known state; the reset includes the loading of the settings stored in the profile identified by the <value> parameter, into the current profile, and the application of the settings.

When the command is issued, any CSD call in progress is released. In case of success, the result code is issued using the format configuration (Q, V, S3, S4 commands) loaded from the requested profile. The other DCE settings are applied after the result code has been sent.

For more details on the settings stored in the profiles, see the Appendix B.1.

15.24.2 Syntax

Type	Syntax	Response	Example
Action	ATZ[<value>]	OK	

15.24.3 Defined values

Parameter	Type	Description
<value>	Number	Profile index, possible values 0-1; optional parameter, the default value is 0

15.24.4 Notes

TOBY-L4

- The command has not effect.

15.25 Set to factory defined configuration &F

&F						
Modules	TOBY-L2 MPCI-L2					
	LARA-R2 TOBY-R2					
	SARA-U2 LISA-U2 LISA-U1					
	SARA-G4 SARA-G3 LEON-G1					
Attributes	**Syntax**	**PIN required**	**Settings saved**	**Can be aborted**	**Response time**	**Error reference**
	full	No	No	No	-	+CME Error

15.25.1 Description

Resets the current profile to factory-programmed setting. Other NVM settings, not included in the profiles, are not affected.

In case of success, the response is issued using the configuration of the result codes format (Q, V, S3, S4 AT commands) loaded from the factory default profile. The other DCE settings are applied after the response has been sent.

For more details on the settings stored in the profiles, refer to Parameters stored in profiles.

15.25.2 Syntax

Type	Syntax	Response	Example
Action	AT&F[<value>]	OK	

15.25.3 Defined values

Parameter	Type	Description
<value>	Number	Only 0 allowed

15.25.4 Notes

LARA-R204

- The command also resets the Class 1 and Class 4 APN profiles to their factory-programmed values. See +VZWAPNE AT command.

15.26 Store current configuration &W

&W						
Modules	TOBY-L4006 TOBY-L4106 TOBY-L4206 TOBY-L4906-01A TOBY-L4906-51A TOBY-L2 MPCI-L2					
	LARA-R2 TOBY-R2					
	SARA-U2 LISA-U2 LISA-U1					
	SARA-G4 SARA-G3 LEON-G1					
Attributes	**Syntax**	**PIN required**	**Settings saved**	**Can be aborted**	**Response time**	**Error reference**
	full	No	No	No	-	+CME Error

15.26.1 Description

Stores into one of the two RAM profile mirrors the current AT configuration of the DCE interface in which the command is issued. The profile is selected according to the AT command parameter value. For more details on the AT command configuration saved in the profiles, refer to Appendix B.1.

The profile is updated with the RAM mirror only when the module is switched off using the +CPWROFF AT command (more details on the command in the Chapter 5.2).

15.26.2 Syntax

Type	Syntax	Response	Example
Action	AT&W[<value>]	OK	

15.26.3 Defined values

Parameter	Type	Description
<value>	Number	• 0 (default value): selects profile 0 • 1: selects profile 1

15.26.4 Notes

TOBY-L4

- Only default profile 0 is supported, and only +COPS and S0 settings are stored to it.

15.27 Display current configuration &V

&V						
Modules	TOBY-L4006 TOBY-L4106 TOBY-L4206 TOBY-L4906-01A TOBY-L4906-51A TOBY-L2 MPCI-L2					
	LARA-R2 TOBY-R2					
	SARA-U2 LISA-U2 LISA-U1					
	SARA-G4 SARA-G3 LEON-G1					
Attributes	**Syntax**	**PIN required**	**Settings saved**	**Can be aborted**	**Response time**	**Error reference**
	full	No	No	No	-	+CME Error

15.27.1 Description

Reports a summary of the current configuration and of the stored user profiles.

☞ Since not all configuration items are listed with this command, see the example below for the list of the displayed configuration items. Appendix B.1 provides the complete list of the configuration items stored in the profiles.

☞ The command does not display audio parameters. Audio parameters can be displayed by the corresponding read command (i.e. AT+UMGC?).

15.27.2 Syntax

Type	Syntax	Response	Example
Action	AT&V	ACTIVE PROFILE: List of commands stored in the active profile with the related values STORED PROFILE 0: List of commands stored in the profile 0 with the related values STORED PROFILE 1: List of commands stored in the profile 1 with the related values OK	ACTIVE PROFILE: &C1, &D1, &S1, &K3, E1, Q0, V1, X4, S00:000, S02:043, S03:013, S04:010, S05:008, S07:060, +CBST:007, 000, 001, +CRLP:061, 061, 048, 006, +CR:000, +CRC:000, +IPR:0, +COPS:0,0, FFFFF, +ICF:3,1, +UPSV: 0, +CMGF:0, +CNMI:1,0,0,0,0, +USTS: 0 STORED PROFILE 0: &C1, &D1, &S1, &K3, E1, Q0, V1, X4, S00:000, S02:043, S03:013, S04:010, S05:008, S07:060, +CBST:007, 000, 001, +CRLP:061, 061, 048, 006, +CR:000, +CRC:000, +IPR:0, +COPS:0,0, FFFFF, +ICF:3,1, +UPSV: 0, +CMGF:0, +CNMI:1,0,0,0,0, +USTS: 0 STORED PROFILE 1: &C1, &D1, &S1, &K3, E1, Q0, V1, X4, S00:000, S02:043, S03:013, S04:010, S05:008, S07:060, +CBST:007, 000, 001, +CRLP:061, 061, 048, 006, +CR:000, +CRC:000, +IPR:0, +COPS:0,0, FFFFF, +ICF:3,1, +UPSV: 0, +CMGF:0, +CNMI:1,0,0,0,0, +USTS: 0 OK

15.27.3 Notes

TOBY-L4

- The command shows the active profile and the single STORED PROFILE 0.

TOBY-L2 / MPCI-L2

- The command shows the stored profiles that were used at boot. The RAM profile mirrors updated with AT&W cannot be retrieved with this command.
- The current setting and the values stored in user profiles of +UPSV AT command are not present in the information text response.

15.28 Designate a default reset profile &Y

&Y						
Modules	TOBY-L2 MPCI-L2					
	LARA-R2 TOBY-R2					
	SARA-U2 LISA-U2 LISA-U1					
	SARA-G4 SARA-G3 LEON-G1					
Attributes	**Syntax**	**PIN required**	**Settings saved**	**Can be aborted**	**Response time**	**Error reference**
	full	No	NVM	No	-	+CME Error

15.28.1 Description

Selects which profile will be loaded at the next power on. The AT commands configuration from the loaded profile will be separately applied to each attached interface. At run time each interface will own the configuration as described in Appendix B.1. An error is returned if <value> is greater then 2, or NVM is not installed or is not operational.

For more details on the commands stored in the profiles, refer to Appendix B.1.

15.28.2 Syntax

Type	Syntax	Response	Example
Action	AT&Y[<value>]	OK	

15.28.3 Defined values

Parameter	Type	Description
<value>	Number	• 0 (default value and factory-programmed value): selects profile 0 • 1: selects profile 1 • 2: selects the factory-programmed settings

15.29 Parity bit transmission over the air +UTPB

+UTPB						
Modules	LARA-R2 TOBY-R2					
	SARA-U2 LISA-U200-02S LISA-U200-03S LISA-U200-52S LISA-U200-62S LISA-U200-83S LISA-U201 LISA-U260-02S LISA-U270-02S LISA-U270-62S LISA-U270-63S LISA-U270-68S					
	SARA-G3					
Attributes	**Syntax**	**PIN required**	**Settings saved**	**Can be aborted**	**Response time**	**Error reference**
	full	No	Profile	No	-	+CME Error

15.29.1 Description

Configures the parity bit transmission over the air, for the data received from the DTE during a data call, when the UART interface is programmed for 7-bit data format.

☞ The parity bit transmission can only work if the 7 bit data, 1 parity bit, 1 stop bit character framing is set (and thus applies only to UART AT interfaces; see the +ICF command description).

☞ The +UTPB command, like the +ICF command, is only effective on UART AT interface. On USB/SPI/MUX AT interfaces the set command always returns the "OK" final result code and the read command always returns 0. Furthermore, the command setting on USB/SPI/MUX AT interfaces has no effect on the UART AT interface and on the AT profiles.

☞ On AUX UART AT interface, the set command always returns the "OK" final result code and the read command always returns 0. Furthermore, the command setting on the AUX UART AT interface has no effect on the UART AT interface and on the AT profiles.

☞ The transmission of the parity bit only applies to Circuit Switched data calls or Socket Direct Link; in all the other cases (e.g. PSD dial-up, file write in module FS, any other direct data transmission modes), the parity information is always filtered out.

☞ LARA-R2 / TOBY-R2 / SARA-U2 / LISA-U2

The transmission of the parity bit is furtherly restricted to only Circuit Switched data calls (no Socket Direct Link).

☞ The 7-bit UART configuration has not to be set if the MUX protocol over UART must be activated. Enabling the parity bit transmission during MUX mode does not influence the data transfer, since the assumption is that 7-bit format (7O1, 7E1) is not active. The module does not check if incompatible settings are requested.

15.29.2 Syntax

Type	Syntax	Response	Example
Set	AT+UTPB=<n>	OK	AT+UTPB=1 OK
Read	AT+UTPB?	+UTPB: <n> OK	+UTPB: 1 OK
Test	AT+UTPB=?	+UTPB: (list of supported <n>'s) OK	+UTPB: (0-1) OK

15.29.3 Defined values

Parameter	Type	Description
<n>	Number	• 0 (factory-programmed value): the parity bit is not transmitted over the air (MSB of the transmitted byte is always 0) • 1: the DCE transmits the parity bit over the air (MSB of the transmitted byte is left untouched)

15.29.4 Notes

- It is possible to enable the transmission of the parity bit even if the frame format on the UART interface is not 7 bit data, 1 parity bit; in such a case the configuration is only applied after the 7-bit format is set on UART (via automatic recognition or +ICF command).
- When the DCE's UART detects a parity error in the received data (received parity bit is different from the calculated one) no specific action is taken, i.e. the data are always transmitted over the air.
- When the parity bit over the air is enabled and the UART character format is 7O1, the default escape character "+" (decimal value of ASCII character is 043) has the parity bit set to 1. This prevents DUT on detecting the escape sequence. The user should change the value of escape character with ATS2 command to a value with parity bit set to 0 (for example character "#", ASCII decimal value 035).
- In case of UART 7O1, 7E1 configuration, the data from the network to the DTE must be in the 7-bit format (each byte is binary data in the range 0x00.0x7F); any information carried in the bit at position 7 (bit 0 is LSB, bit 7 is MSB) is ignored by the module, and in any case not transmitted to the DTE since it is replaced by parity information.

15.29.5 AT+UTPB=0 case diagram

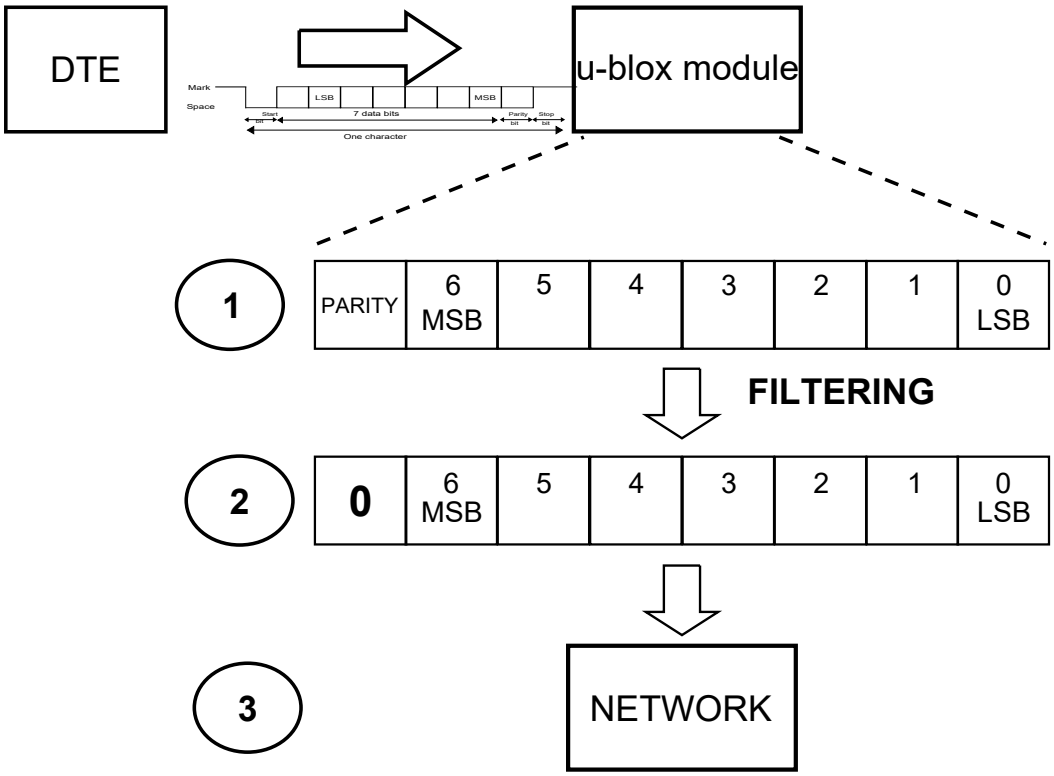

Figure 2: AT+UTPB=0 case diagram

15.29.6 AT+UTPB=1 case diagram

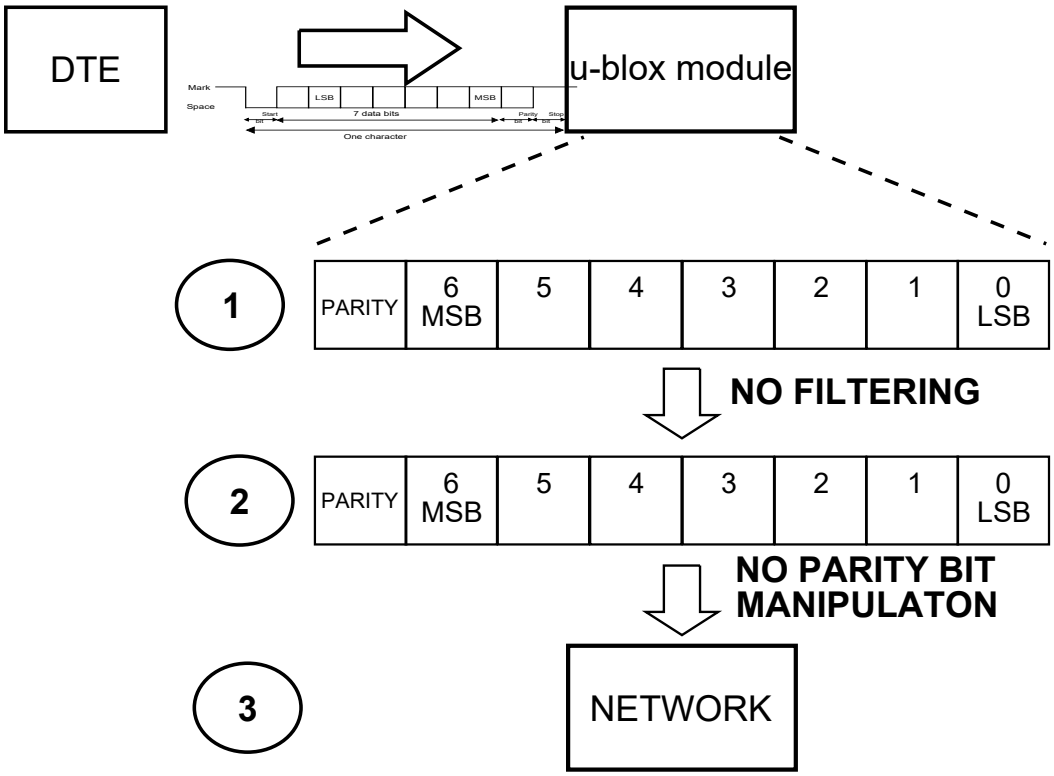

Figure 3: AT+UTPB=1 case diagram

16 SIM management

16.1 Generic SIM access +CSIM

+CSIM						
Modules	All products					
Attributes	**Syntax**	**PIN required**	**Settings saved**	**Can be aborted**	**Response time**	**Error reference**
	full	Yes	No	No	-	+CME Error

16.1.1 Description

Allows direct control of the SIM by a distant application on the TE. This command transparently transmits the <command> to the SIM via the MT. The <response> is returned in the same manner to the TE.

☞ The command needs the SIM module to work correctly.

☞ It is recommended to wait some seconds after boot (or reset) before using the command.

☞ TOBY-L2 / MPCI-L2
The PIN insertion is not mandatory before the command execution.

16.1.2 Syntax

Type	Syntax	Response	Example
Set	AT+CSIM=<length>,<command>	+CSIM: <length>,<response> OK	AT+CSIM=14,"A0A40000027F20" +CSIM: 4,"6E00" OK
Test	AT+CSIM=?	OK	OK

16.1.3 Defined values

Parameter	Type	Description
<length>	Number	Length of the characters sent to the TE in <command> or <response> parameters
<command>	String	Command passed on by MT to SIM in hex format; see the 3GPP TS 51.011 [18] and ETSI TS 102 221 [93]
<response>	String	Response to the command passed on by the SIM to the MT (3GPP TS 51.011 [18] and ETSI TS 102 221 [93])

16.2 Restricted SIM access +CRSM

+CRSM						
Modules	All products					
Attributes	**Syntax**	**PIN required**	**Settings saved**	**Can be aborted**	**Response time**	**Error reference**
	full	Yes	No	No	< 10 s	+CME Error

16.2.1 Description

Allows easy access to the SIM database. The set command transmits the SIM command and its required parameters to the MT. The MT handles internally all SIM-MT interface locking and file selection routines. As response to the command, the MT sends the actual SIM information parameters and response data. An error result code may be returned when the command cannot be passed to the SIM, but the failure in the execution of the command in the SIM is reported in <sw1> and <sw2> parameters.

The expected response time shall be increased when using a remote SIM card via SAP and in case of simultaneous access to the SIM by another AT interface or by internal clients (e.g. BIP, IMS).

☞ The command needs the SIM module to work correctly.

☞ TOBY-L2 / MPCI-L2
The PIN insertion is not mandatory before the command execution.

16.2.2 Syntax

Type	Syntax	Response	Example
Set	AT+CRSM=<command>[,<fileid>[,<P1>,<P2>,<P3>[,<data> [,<pathid>]]]]	+CRSM: <sw1>,<sw2>[,<response>] OK	AT+CRSM=176,28471,0,0,3 +CRSM: 144,0,"989301770020594178F2" OK
Test	AT+CRSM=?	OK	OK

16.2.3 Defined values

Parameter	Type	Description
<command>	Number	• 176: read binary • 178: read record • 192: get response • 214: update binary • 220: update record • 242: status
<fileid>	Number	Identifies elementary datafile on SIM. Mandatory for each command except STATUS (e.g. 28423: meaning IMSI file (6F07))
<P1>, <P2>, <P3>	Number	Defines the request. These parameters are mandatory for each command, except GET RESPONSE and STATUS. The values are described in 3GPP TS 51.011 [18] and ETSI TS 102 221 [93].
<data>	String	Information which shall be written to the SIM (hexadecimal character format; see the +CSCS - string containing hexadecimal characters)
<pathid>	String	Contains the path of an elementary file on the SIM/UICC in hexadecimal format as defined in ETSI TS 102 221 [93] (e.g. "7F205F70" in SIM and UICC case). The <pathid> shall only be used in the mode "select by path from MF" as defined in ETSI TS 102 221 [93]
<sw1>, <sw2>	Number	Contains SIM information about the execution of the actual command and can be (more details in 3GPP TS 51.011 [18] and ETSI TS 102 221 [93]): • 0x90 0x00: normal ending of the command • 0x9F 0xXX: length XX of the response data • 0x92 0x0X: command successful but after using an internal retry routine X times • 0x92 0x40: memory problem • 0x94 0x00: no EF selected • 0x94 0x02: out of range (invalid address) • 0x94 0x04: file ID not found; pattern not found • 0x94 0x08: file is inconsistent with the command • 0x98 0x02: no CHV initialized • 0x98 0x04: access condition not fullfiled / unsucc. CHV verify / authent.failed • 0x98 0x08: in contradiction with CHV status • 0x98 0x10: in contradiction with invalidation status • 0x98 0x40: unsucc. CHV-verif. or UNBLOCK CHV-verif. / CHV blocked / UNBL.blocked • 0x98 0x50: increase cannot be performed. Max. value reached • 0x67 0xXX: incorrect parameter P3 • 0x6A 0x81: function not supported • 0x6A 0x82: file not found • 0x6B 0xXX: incorrect parameter P1 or P2 • 0x6D 0xXX: unknown instruction code given in the command • 0x6E 0xXX: wrong instruction class given in the command • 0x6F 0xXX: technical problem with no diagnostic given
<response>	String	The response of successful completion of the command previously issued (hexadecimal character format; see the +CSCS). STATUS and GET RESPONSE return data, which gives information about the current elementary datafield. This information includes the type of file and its size (see the 3GPP TS 51.011 [18] and the ETSI TS 102 221 [93]). After READ BINARY or READ RECORD command the requested data will be returned. <response> is not returned after a successful UPDATE BINARY or UPDATE RECORD command.

16.3 Read the SIM language +CLAN

+CLAN						
Modules	TOBY-L4 TOBY-L2 MPCI-L2					
	LARA-R2 TOBY-R2					
	SARA-U2 LISA-U2 LISA-U1					
Attributes	**Syntax**	**PIN required**	**Settings saved**	**Can be aborted**	**Response time**	**Error reference**
	full	No	No	No	-	+CME Error

16.3.1 Description

Reads the language from the SIM.

☞ The read syntax will display the most preferred language from the preferred language list in EF_{ELP} (2F05) file. If the EF_{ELP} file does not exist, the preferred language is read from EF_{LP} (6F05) file. This file content is decoded according to the CB (cell broadcast) data coding scheme (dcs), and the according language is displayed in the response string. If this byte does not result in a valid language according to the CB dcs, then it is printed in the response string in hexadecimal representation.

16.3.2 Syntax

Type	Syntax	Response	Example
Read	AT+CLAN?	+CLAN: <code>	+CLAN: "en"
		OK	OK
Test	AT+CLAN=?	OK	

16.3.3 Defined values

Parameter	Type	Description
<code>	String	It is a two-letter abbreviation of the language. The language codes, as defined in ISO 639, consists of two characters, e.g. "en", "it" etc

16.4 Check for UICC card +UUICC

+UUICC						
Modules	TOBY-L4 TOBY-L2 MPCI-L2					
	LARA-R2 TOBY-R2					
	SARA-U2 LISA-U2 LISA-U1					
Attributes	**Syntax**	**PIN required**	**Settings saved**	**Can be aborted**	**Response time**	**Error reference**
	full	No	No	No	-	+CME Error

16.4.1 Description

Returns the type of application which is present on the ICC or UICC.

16.4.2 Syntax

Type	Syntax	Response	Example
Read	AT+UUICC?	+UUICC: <state>	+UUICC: 1
		OK	OK

16.4.3 Defined values

Parameter	Type	Description
<state>	Number	• 0: 2G SIM (SIM application present) • 1: 3G SIM (USIM application present)

16.5 Customer service profile +UCSP

+UCSP						
Modules	TOBY-L4 TOBY-L2 MPCI-L2					
	LARA-R2 TOBY-R2					
	SARA-U2 LISA-U2 LISA-U1					
Attributes	**Syntax**	**PIN required**	**Settings saved**	**Can be aborted**	**Response time**	**Error reference**
	full	Yes	No	No	-	+CME Error

16.5.1 Description

Reads the customer service profile (CSP) from the SIM. The CSP indicates the services that are user accessible.

☞ The syntax +UCSP (if the <service_group> parameter is not issued) displays all the service groups.

☞ If CSP information is not available on the SIM, the "+CME ERROR: SIM Failure" error result code is returned when trying to interrogate all or one of the service groups.

16.5.2 Syntax

Type	Syntax	Response	Example
Set	AT+UCSP[=<service group>]	+UCSP: <service_group>,<services> [+UCSP: <service_group>, <services> [...]] OK	AT+UCSP=6 +UCSP=6,10000000 OK
Test	AT+UCSP=?	+UCSP: (list of supported <service group>s) OK	+UCSP: (1-9,c0,d5) OK

16.5.3 Defined values

Parameter	Type	Description
<service_group>	Number	Service group (1-9, c0, d5)
<services>	Number	Services of one service group in bit-format beginning with the most significant bit of the service byte

16.6 SIM hot insertion configuration +UDCONF=50

+UDCONF=50						
Modules	TOBY-L4 TOBY-L200-02S TOBY-L200-03A TOBY-L200-03S TOBY-L201-02S TOBY-L210-02S TOBY-L210-03A TOBY-L210-03S TOBY-L210-62S TOBY-L220 TOBY-L280 MPCI-L200-02S MPCI-L200-03S MPCI-L201-02S MPCI-L210-02S MPCI-L210-03S MPCI-L220 MPCI-L280					
	LARA-R2 TOBY-R2					
	SARA-U2 LISA-U200-01S LISA-U200-02S LISA-U200-03S LISA-U200-52S LISA-U200-62S LISA-U200-83S LISA-U201 LISA-U230 LISA-U260 LISA-U270					
Attributes	**Syntax**	**PIN required**	**Settings saved**	**Can be aborted**	**Response time**	**Error reference**
	full	No	NVM	No	-	+CME Error

16.6.1 Description

Configures the SIM hot insertion feature. The feature enables the SIM interface upon detection of external SIM card physical insertion / removal and behaves accordingly, triggering registration and deregistration.

The +CIEV URC (see +CMER AT command) and +CIND AT command notify the SIM card detection status.

☞ The command setting is saved in NVM and will be effective at the next power on.

16.6.2 Syntax

Type	Syntax	Response	Example
Set	AT+UDCONF=50,<sim_hot_insertion>	OK	AT+UDCONF=50,1 OK
Read	AT+UDCONF=50	+UDCONF: 50,<sim_hot_insertion> OK	AT+UDCONF=50 +UDCONF: 50,1 OK

16.6.3 Defined values

Parameter	Type	Description
<sim_hot_insertion>	Number	SIM hot insertion setting. Allowed values: • 0 (factory-programmed value): SIM hot insertion disabled • 1: SIM hot insertion enabled

16.6.4 Notes

TOBY-L2 / MPCI-L2

- If the SIM hot insertion feature is disabled, the +CIEV URC (see +CMER AT command) and +CIND AT command report the SIM card detection status in relation to the bare level of the SIM detection pin, otherwise they provide the SIM hot insertion status.
- The SIM card detection feature detects the SIM card mechanical / physical presence displayed by means of +CIEV URC (see +CMER AT command) and +CIND AT command. The +CPIN behaviour depends on the status of SIM hot insertion:
  - If SIM hot insertion is enabled the +CPIN setting is accordingly updated
  - If SIM hot insertion is disabled and a SIM is inserted a +CFUN=19 / +CFUN=1 cycle (or a silent reset by means of +CFUN=15) is needed to update the +CPIN setting
- SIM card detection and SIM hot insertion interoperability provides an overview between the two features depending on +UGPIOC and +UDCONF=50 setting:

<sim_hot_insertion>	+UGPIOC	Remarks
-	Disabled	SIM card detection is disabled, "simind" will return always 2 (see +CIND AT command and +CIEV URC)
Disabled	Enabled	SIM cart detection status provided on GPIO pin configured as SIM card detection
Enabled	Enabled	+CIEV URC and +CIND AT command provide the SIM hot insertion status

Table 21: SIM card detection and SIM hot insertion interoperability

TOBY-L4 / LARA-R2 / TOBY-R2 / SARA-U2 / LISA-U2

- For the correct behavior of the SIM hot insertion feature, the SIM card detection feature (configurable by means of the +UGPIOC AT command where supported) must be enabled too.
- The SIM card detection status is notified by means of +CIEV URC (see +CMER AT command) and +CIND AT command only if <sim_hot_insertion> of +UDCONF=50 AT command is enabled and a GPIO pin is configured as SIM card detection (see +UGPIOC AT command). If the SIM hot insertion feature is not enabled then the "simind" parameter value of +CIEV URC and +CIND AT command is unpredictable (0, 1 or 2).

16.7 UICC application discovery +CUAD

+CUAD						
Modules	TOBY-L4 TOBY-L2 MPCI-L2					
	LARA-R2 TOBY-R2					
	SARA-U201 SARA-U260-03S SARA-U270-03A SARA-U270-03S SARA-U270-04B SARA-U270-53S SARA-U270-73S SARA-U280-03S LISA-U200-03S LISA-U200-83S LISA-U201					
	SARA-G340-02S SARA-G340-02X SARA-G350-02A SARA-G350-02S SARA-G350-02X SARA-G350-53S					
Attributes	**Syntax**	**PIN required**	**Settings saved**	**Can be aborted**	**Response time**	**Error reference**
	full	No	No	No	-	+CME Error

16.7.1 Description

Asks the MT to discover what applications are available for selection on the UICC. According to ETSI TS 102.221 [92], the ME shall access and read the EF_{DIR} file in the UICC and return the values that are stored in its records. Each record contains the AID and optionally application parameters of one of the applications available on the UICC.

If the optional parameter(s) are requested and the EF_{DIR} file is not present in the UICC, the <response> parameter shall be empty.

16.7.2 Syntax

Type	Syntax	Response	Example
Set	AT+CUAD[=<option>] OK	+CUAD: <response>[,<active_application>[,<AID>]] OK	AT+CUAD=1 +CUAD: 61124F10A0000000871002FFFFFFFF89060400FFFFFFFFFFFFFFFFFFFFFFFFFF9000,2,A0000000871002FFFFFFFF89060400FF OK
Test	AT+CUAD=?	+CUAD: (list of supported <option>s) OK	+CUAD: (0,1) OK

16.7.3 Defined values

Parameter	Type	Description
<option>	Number	• 0 (default value): no parameters requested in addition to <response> • 1: include <active_application>
<response>	String	Content of the EF_{DIR} in hexadecimal format
<active_application>	Number	Active application: • 0: no SIM or USIM active • 1: active application is SIM • 2: active application is USIM, followed by <AID>
<AID>	String	AID of active USIM in hexadecimal format

16.8 Open logical channel +CCHO

+CCHO						
Modules	TOBY-L4 TOBY-L2 MPCI-L2					
	LARA-R2 TOBY-R2					
	SARA-U201 SARA-U260-03S SARA-U270-03A SARA-U270-03S SARA-U270-04B SARA-U270-53S SARA-U270-73S SARA-U280-03S LISA-U200-03S LISA-U200-83S LISA-U201					
	SARA-G340-02S SARA-G340-02X SARA-G350-02A SARA-G350-02S SARA-G350-02X SARA-G350-53S					
Attributes	**Syntax**	**PIN required**	**Settings saved**	**Can be aborted**	**Response time**	**Error reference**
	full	No	No	No	-	+CME Error

16.8.1 Description

Causes the MT to return <sessionid> to allow the TE to identify a channel that is being allocated by the currently selected UICC, which is attached to ME. The currently selected UICC will open a new logical channel, select the application identified by the <dfname> received with this command and return a session Id as the response. The ME shall restrict the communication between the TE and the UICC to this logical channel.

This <sessionid> is to be used when sending commands with +CRLA or +CGLA commands.

When the maximum number of logical channels have been opened (normally 3, 2 when the IMS client is active), the command provides an error result code.

16.8.2 Syntax

Type	Syntax	Response	Example
Set	AT+CCHO=<dfname>	+CCHO: <sessionid> OK	AT+CCHO="A000000087100 4FF49FF0589" +CCHO: 11791 OK
Test	AT+CCHO=?	OK	

16.8.3 Defined values

Parameter	Type	Description
<dfname>	Number	DF name, coded on 1 to 16 bytes, identifying the UICC application.
<sessionid>	Number	Session Id to be used to target a specific application on the smart card using logical channel mechanism.

16.9 Close logical channel +CCHC

+CCHC						
Modules	TOBY-L4 TOBY-L2 MPCI-L2					
	LARA-R2 TOBY-R2					
	SARA-U201 SARA-U260-03S SARA-U270-03A SARA-U270-03S SARA-U270-04B SARA-U270-53S SARA-U270-73S SARA-U280-03S LISA-U200-03S LISA-U200-83S LISA-U201					
	SARA-G340-02S SARA-G340-02X SARA-G350-02A SARA-G350-02S SARA-G350-02X SARA-G350-53S					
Attributes	**Syntax**	**PIN required**	**Settings saved**	**Can be aborted**	**Response time**	**Error reference**
	full	No	No	No	-	+CME Error

16.9.1 Description

Asks the ME to close a communication session with the active UICC. The ME shall close the previously opened logical channel. The TE will no longer be able to send commands on this logical channel. The UICC will close the logical channel when receiving this command.

16.9.2 Syntax

Type	Syntax	Response	Example
Set	AT+CCHC=<sessionid>	+CCHC OK	AT+CCHC=11791 +CCHC

Type	Syntax	Response	Example
			OK
Test	AT+CCHC=?	OK	

16.9.3 Defined values

Parameter	Type	Description
<sessionid>	Number	Session Id to be used to target a specific application on the smart card using logical channel mechanism.

16.10 Generic UICC logical channel access +CGLA

+CGLA						
Modules	TOBY-L4 TOBY-L2 MPCI-L2					
	LARA-R2 TOBY-R2					
	SARA-U201 SARA-U260-03S SARA-U270-03A SARA-U270-03S SARA-U270-04B SARA-U270-53S SARA-U270-73S SARA-U280-03S LISA-U200-03S LISA-U200-83S LISA-U201					
	SARA-G340-02S SARA-G340-02X SARA-G350-02A SARA-G350-02S SARA-G350-02X SARA-G350-53S					
Attributes	**Syntax**	**PIN required**	**Settings saved**	**Can be aborted**	**Response time**	**Error reference**
	full	Yes	No	No	-	+CME Error

16.10.1 Description

Transmits to the MT the <command> that shall be sent as it is to the selected UICC. In the same manner the UICC <response> shall be sent back by the MT to the TA as it is.

The command allows a direct control of the currently selected UICC by an application on the TE. The TE shall then take care of processing UICC information within the frame specified by GSM/UMTS networks.

Although the command allows the TE to take control over the UICC-MT interface, there are some functions of the UICC-MT interface that logically do not need to be accessed from outside the TA/MT. Moreover, for security reason the GSM network authentication should not be handled outside the TA/MT.

Compared to the +CRLA command, the definition of +CGLA allows TE to take more control over the UICC-MT interface. The locking and unlocking of the interface may be done by a special <command> value or automatically by TA/MT (by interpreting <command> parameter). If the TE application does not use the unlock command (or does not send a <command> causing automatic unlock) in a certain timeout value, the MT may release the locking.

☞ TOBY-L2 / MPCI-L2
The PIN insertion is not mandatory before the command execution.

16.10.2 Syntax

Type	Syntax	Response	Example
Set	AT+CGLA=<sessionid>,<length>,<command>	+CGLA: <length>,<response> OK	
Test	AT+CGLA=?	OK	

16.10.3 Defined values

Parameter	Type	Description
<sessionid>	Number	Identifier of the session to be used to send the APDU commands to the UICC. It is mandatory to send the commands to the UICC when targeting applications on the smart card using a logical channel other than the default channel (channel "0")
<length>	Number	Length of the characters that are sent to TE in <command> or <response> (two times the actual length of the command or response)
<command>	String	Command passed on by the MT to the UICC in the format as described in 3GPP TS 31.101 [92] (hexadecimal character format; see +CSCS)
<response>	String	Response to the command passed on by the UICC to the MT in the format as described in 3GPP TS 31.101 [92] (hexadecimal character format; see +CSCS)

16.11 Restricted UICC logical channel access +CRLA

+CRLA						
Modules	TOBY-L4 TOBY-L2 MPCI-L2					
	LARA-R2 TOBY-R2					
	SARA-U201 SARA-U260-03S SARA-U270-03A SARA-U270-03S SARA-U270-04B SARA-U270-53S SARA-U270-73S SARA-U280-03S LISA-U200-03S LISA-U200-83S LISA-U201					
	SARA-G340-02S SARA-G340-02X SARA-G350-02A SARA-G350-02S SARA-G350-02X SARA-G350-53S					
Attributes	**Syntax**	**PIN required**	**Settings saved**	**Can be aborted**	**Response time**	**Error reference**
	full	Yes	No	No	-	+CME Error

16.11.1 Description

By using this command instead of +CGLA, the TE application has easier but more limited access to the UICC database. The set command transmits to the MT the UICC <command> and its required parameters. The MT internally handles, for the selected UICC, all the UICC-MT interface locking and file selection routines. As response to the command, the MT sends the actual UICC information parameters and response data. An MT error result code may be returned when the command cannot be passed to the UICC, but the failure in the execution of the command in the UICC is reported in <sw1> and <sw2> parameters.

The expected response time shall be increased when using a remote SIM card via SAP and in case of simultaneous access to the UICC by another AT interface or by internal clients (e.g. BIP, IMS).

☞ TOBY-L2 / MPCI-L2
The PIN insertion is not mandatory before the command execution.

16.11.2 Syntax

Type	Syntax	Response	Example
Set	AT+CRLA=<sessionid>,<command>[,<fileid>[,<P1>,<P2>,<P3>[,<data>[,<pathid>]]]]	+CRLA: <sw1>,<sw2>[,<response>] OK	AT+CRLA=11791,176,28419,0,0,256 +CRLA: 144,0,800 D746573742E33677070 2E636F6DFFFFFFFFFFFFFFFFFFFF FFFFFFFFFFFFFFF OK
Test	AT+CRLA=?	OK	

16.11.3 Defined values

Parameter	Type	Description
<sessionid>	Number	Identifier of the session to be used to send the APDU commands to the UICC. It is mandatory to send commands to the UICC when targeting applications on the smart card using a logical channel other than the default channel (channel "0").
<command>	Number	Command passed on by the MT to the UICC, see the 3GPP TS 31.101 [92]: • 176: READ BINARY • 178: READ RECORD • 192: GET RESPONSE • 214: UPDATE BINARY • 220: UPDATE RECORD • 242: STATUS • 203: RETRIEVE DATA • 219: SET DATA
<fileid>	Number	Identifier of an elementary datafile on UICC. Mandatory for every command except STATUS. The values are described in ETSI TS 102.221 [93]. The range depends on the actual UICCand is defined in 3GPP TS 31.101 [92].
<P1>	Number	Parameter passes on by the MT to the UICC. The values are described in 3GPP TS 31.101 [92]. Mandatory for every command except GET RESPONSE and STATUS.
<P2>	Number	Parameter passes on by the MT to the UICC. The values are described in 3GPP TS 31.101 [92]. Mandatory for every command except GET RESPONSE and STATUS.
<P3>	Number	Parameter passes on by the MT to the UICC. The values are described in 3GPP TS 31.101 [92]. Mandatory for every command except GET RESPONSE and STATUS.

Parameter	Type	Description
<data>	String	Information which shall be written to the SIM (hexadecimal character format; see +CSCS)
<pathid>	String	Contains the path of an elementary file on the UICC in hexadecimal format. This parameter shall only be used in the mode "select by path from current DF" as defined in ETSI TS 102.221 [93].
<sw1>	Number	Information from the UICC about the execution of the actual command. This parameter is delivered to the TE in both cases, on successful or failed execution of the command.
<sw2>	Number	Additional information depending on <sw1>. This parameter is delivered to the TE in both cases, on successful or failed execution of the command.
<response>	String	Response of a successful completion of the command previously issued (hexadecimal character format; see +CSCS). The STATUS and GET RESPONSE return data, which gives information about the current elementary datafield. This information includes the type of file and its size (see 3GPP TS 31.101 [92]). After the READ BINARY, READ RECORD or RETRIEVE DATA command the requested data will be returned. The parameter is not returned after a successful UPDATE BINARY, UPDATE RECORD or SET DATA command.

16.12 SIM states reporting +USIMSTAT

+USIMSTAT						
Modules	LARA-R2 TOBY-R2					
	SARA-U201 SARA-U260-03S SARA-U270-03A SARA-U270-03S SARA-U270-04B SARA-U270-53S SARA-U270-73S SARA-U280-03S LISA-U200-03S LISA-U200-83S LISA-U201					
Attributes	**Syntax**	**PIN required**	**Settings saved**	**Can be aborted**	**Response time**	**Error reference**
	partial	No	NVM	No	-	+CME Error

16.12.1 Description

Configures the +UUSIMSTAT URC presentation. Based on the configuration, the URC is able to report the SIM card initialization status, the phonebook initialization status and the REFRESH proactive command execution result.

☞ If <state> 9 and 10 are reported, update all SIM card related parameters cached in the DTE's application (e.g. the IMSI retrieved with +CIMI command).

16.12.2 Syntax

Type	Syntax	Response	Example
Set	AT+USIMSTAT=<mode>	OK	AT+USIMSTAT=3 OK
Read	AT+USIMSTAT?	+USIMSTAT: <mode> OK	+USIMSTAT: 3 OK
Test	AT+USIMSTAT=?	+USIMSTAT: (list of supported <mode>s) OK	+USIMSTAT: (0-7) OK
URC		+UUSIMSTAT: <state>	+UUSIMSTAT: 8

16.12.3 Defined values

Parameter	Type	Description
<mode>	Number	Bitmask representing which indications the +UUSIMSTAT URC is allowed to report. See Table 22 for the meaning of each bit. The factory-programmed value is 0.
<state>	Number	• 0: SIM card not present • 1: PIN needed • 2: PIN blocked • 3: PUK blocked • 4: (U)SIM not operational • 5: (U)SIM in restricted use (FDN or BDN active)

Parameter	Type	Description
		• 6: (U)SIM operational (registration may be initiated) • 7: SIM phonebook ready to be used (when the SIM application is active) • 8: USIM phonebook ready to be used (when the USIM application is active) • 9: (U)SIM toolkit REFRESH proactive command successfully concluded • 10: (U)SIM toolkit REFRESH proactive command unsuccessfully concluded • 11: PPP connection active, (U)SIM toolkit REFRESH proactive command delayed till PPP deactivation • 12: voice call active, (U)SIM toolkit REFRESH proactive command delayed till call release • 13: CSD call active, (U)SIM toolkit REFRESH proactive command delayed till call release

16.12.4 Notes

- <state>=9 and 10 will not be reported when dedicated (+CFUN=6) or raw (+CFUN=9) mode is active.
- Table 22 provides the meaning of each bit with the corresponding state:

Bit	States reported
0	Reports the (U)SIM initialization status (<state>'s from 0 to 6 may be reported)
1	Reports the (U)SIM phonebook initialization status (<state>'s from 7 to 8 may be reported)
2	Reports the (U)SIM toolkit REFRESH proactive command execution result (<state>'s from 9 to 13 may be reported)

Table 22: <mode> bitmask meaning

SARA-U260-03S / SARA-U270-03A / SARA-U270-03S / SARA-U270-73S / SARA-U280-03S / LISA-U200-03S / LISA-U200-83S / LISA-U201

- <state>=11, 12 and 13 are not reported.

SARA-U270-53S

- On SARA-U270-53S-00 <state>=11, 12 and 13 are not reported.

16.13 Answer To Reset contents +USIMATR

+USIMATR						
Modules	LARA-R2 TOBY-R2					
	SARA-U201 SARA-U270-04B SARA-U270-53S					
Attributes	Syntax	PIN required	Settings saved	Can be aborted	Response time	Error reference
	full	No	No	No	-	+CME Error

16.13.1 Description

Returns the actual content of the ATR (Answer To Reset).

16.13.2 Syntax

Type	Syntax	Response	Example
Action	AT+USIMATR	+USIMATR: <atr> OK	+USIMATR: "3B9E96803FC3A08031E073FE211B630801140F9000D3" OK

16.13.3 Defined values

Parameter	Type	Description
<atr>	String	ATR contents, see the ETSI TS 102.221 [92].

16.13.4 Notes

- The command needs of the SIM to correctly work.

16.14 Perform SIM switch +XSIMSWITCH

+XSIMSWITCH						
Modules	TOBY-L4					
Attributes	**Syntax**	**PIN required**	**Settings saved**	**Can be aborted**	**Response time**	**Error reference**
	full	No	NVM	No	Up to 3 min	+CME Error

16.14.1 Description

Selects the SIM slot to be used to perform SIM switch operation. It shall be ensured that both SIM cards are inserted so that SIM switch works seamlessly.

Sets the MT to minimum functionality by deactivating CS / PS services and the SIM card, changes the selected SIM slot and finally sets the MT again to full functionality.

16.14.2 Syntax

Type	Syntax	Response	Example
Set	AT+XSIMSWITCH=<sim_slot>	OK	AT+XSIMSWITCH=1 OK
Read	AT+XSIMSWITCH?	+XSIMSWITCH: <sim_slot> OK	+XSIMSWITCH: 1 OK
Test	AT+XSIMSWITCH=?	+XSIMSWITCH: (list of supported <sim_slot>s) OK	+XSIMSWITCH: (0-1) OK

16.14.3 Defined values

Parameter	Type	Description
<sim_slot>	Number	• 0 (factory-programmed value): SIM slot 1 to be used (by default SIM slot 1 would be the active slot) • 1: SIM slot 2 to be used

17 SIM toolkit

17.1 Introduction

SIM Application Toolkit (STK) is the 3GPP standard feature that allows the Subscriber Identity Module (SIM) to handle the DCE, also by giving commands such as displaying menus and/or asking for user input, and control its access to the network.

Once the SIM toolkit interface has been enabled via AT+CFUN command, the DTE is notified SIM toolkit commands and events and can interact with the SIM through appropriate STK AT commands.

SIM toolkit processing supports two modes: dedicated and raw. In dedicated mode, the DTE is notified of STK commands and events after decoding; in raw mode the DTE receives the raw data as received from the SIM. Only one mode can be enabled and function at a time.

☞ TOBY-L4 / TOBY-L2 / MPCI-L2 / LARA-R2 / TOBY-R2 / SARA-U2 / LISA-U2 / LISA-U1 / SARA-G3 / LEON-G1
The activation of the SIM toolkit interface can be done with AT+CFUN=6 for enabling dedicated mode and AT+CFUN=9 for enabling raw mode.

☞ TOBY-L2 / MPCI-L2 / LARA-R2 / TOBY-R2 / SARA-U2 / LISA-U2 / LISA-U1 / SARA-G3 / LEON-G1
After the activation of the SIM toolkit interface, the setup menu may be displayed via URC (+STKPRO, +UCATPROI or +URCATI depending on module and mode) when available from the SIM (immediately at SIM initialization or after PIN insertion).

For more details on the command description and parameters, see 3GPP TS 51.014 [44].

☞ The setup menu fetched from the SIM card may vary with the terminal profile supported by the MT, which is affected by the capabilities of the module itself (e.g. speech): this implies that different u-blox modules may display different setup menus with the same SIM card.

☞ The commands in this section properly work only if the SIM toolkit interface has been activated by the DTE. Otherwise the SIM toolkit processing will be blocked.

☞ If an AT command related to the dedicated mode is used when the raw mode is enabled (and vice versa), an error result code ("+CME ERROR: operation not allowed" if +CMEE is set to 2) is returned.

The STK commands related to the Bearer Independent Protocol, i.e. Open Channel, Close Channel, Receive Data, Send Data, Get Channel Status and the events Data Available and Channel Status, are autonomously managed by the device without the intervention from the TE, unless the dedicated mode is active and the Open Channel command requires the user intervention (see ETSI TS 102 223 [51]).

☞ TOBY-L4 / TOBY-L2 / MPCI-L2 / LARA-R2 / TOBY-R2 / SARA-U2 / LISA-U2 / LISA-U1 / SARA-G3 / LEON-G1
In dedicated mode if the Alpha Identifier is present in the STK command, the +STKPRO or +UCATPRON URC will be issued, depending on module.
In dedicated mode when the user intervention is required, the terminal response shall be entered via +STKTR or +UCATTR command in order to proceed with or to terminate the proactive session.
Where supported, the +UUBIP URC may be enabled to monitor the BIP session.

17.2 Terminal profile +STKPROF

+STKPROF						
Modules	TOBY-L4					
	LARA-R2 TOBY-R2					
	SARA-U2 LISA-U2 LISA-U1					
	SARA-G3 LEON-G1					
Attributes	**Syntax**	**PIN required**	**Settings saved**	**Can be aborted**	**Response time**	**Error reference**
	full	Yes	No	No	-	+CME Error

17.2.1 Description

Allows reading and changing the terminal profile (list of SIM Application Toolkit facilities supported by the terminal, see ETSI TS 102 223 [51]) data stored in NVM and used only at the SIM initialization. The SIM card may

use this information to filter the proactive commands sent to the module. This command does not actually remove/add any functionality from/to the module.

☞ The command can be used only if the SIM toolkit interface is enabled in dedicated mode.

17.2.2 Syntax

Type	Syntax	Response	Example
Set	AT+STKPROF=<length>,<data>	OK	AT+STKPROF=2,"1F7F" OK
Read	AT+STKPROF?	+STKPROF: <length>,<data> OK	+STKPROF:17,"FFFFFFFF7F0300DF7F00000000010A0003" OK
Test	AT+STKPROF=?	OK	

17.2.3 Defined values

Parameter	Type	Description
<length>	Number	Length in bytes of data sent to DTE in <data>
<data>	String	Terminal profile data coded in hex format

17.2.4 Notes

- <length> set to 0 forces a reset to the default terminal profile stored in the MT.

17.3 Proactive command in dedicated mode +STKPRO

+STKPRO						
Modules	TOBY-L4					
	LARA-R2 TOBY-R2					
	SARA-U2 LISA-U2 LISA-U1					
	SARA-G3 LEON-G1					
Attributes	**Syntax**	**PIN required**	**Settings saved**	**Can be aborted**	**Response time**	**Error reference**
	partial	Yes	No	No	-	-

17.3.1 Description

The test command displays the list of the proactive commands that need a response from the user/application via +STKTR command. Only the test command syntax is allowed.

During the STK transactions, if the STK interface has been activated in dedicated mode, the URC +STKPRO displays every proactive command.

17.3.2 Syntax

Type	Syntax	Response	Example
Test	AT+STKPRO=?	+STKPRO: (list of supported <proactive_cmd>s) OK	+STKPRO: (01,05,16,17,18,19,20,32,33,34,35,36,37,38,40,52,53) OK
Generic syntax			
URC		+STKPRO: <proactive_cmd>,...	
Refresh			
URC		+STKPRO: 01,<type>,<number of files>,<files>	
Set up event list			
URC		+STKPRO: 05,<event_list>	
Set up call			
URC		+STKPRO: 16,<number>,<subaddr>,<type>,<alpha_1>,<icon_id1>,<alpha_2>,<icon_id2>	
Send SS			

Type	Syntax	Response	Example
URC		+STKPRO: 17,<ss_data>,<alpha>,<icon_id>,<ref_number>	
Send USSD			
URC		+STKPRO: 18,<dcs>,<hex_string>,<alpha>,<icon_id>,<ref_number>	
Send SMS			
URC		+STKPRO: 19,<alpha>,<icon_id>,<ref_number>	
Send DTMF			
URC		+STKPRO: 20,<alpha>,<icon_id>,<dtmf_string>	
Play tone			
URC		+STKPRO: 32,<tone>,<unit>,<interval>,<alpha>,<icon_id>	
Display text			
URC		+STKPRO: 33,<type>,<dcs>,<hex_string>,<icon_id>,<imm_resp>	
Get inkey			
URC		+STKPRO: 34,<type>,<dcs>,<hex_string>,<icon_id>	
Get input			
URC		+STKPRO: 35,<type>,<dcs>,<hex_string>,<max_rsp_len>,<min_rsp_len>,<default_text>,<icon_id>	
Select item			
URC		+STKPRO: 36,<type>,<alpha>,<item_id>,<total_items>,<item_text>,<next_action>,<default_item>,<icon_id>,<icon_id_list_element>	
Set up menu			
URC		+STKPRO: 37,<type>,<alpha>,<item_id>,<total_items>,<item_text>,<next_action>,<icon_id>,<icon_id_list_element>	
Provide local info			
URC		+STKPRO: 38,<type>	
Set up idle mode text			
URC		+STKPRO: 40,<dcs>,<hex_string>,<icon_id>	
Run AT command			
URC		+STKPRO: 52,<type>,<alpha>,<icon_id>,<at_command>	
Language notification			
URC		+STKPRO: 53,<language>	
Open channel			
URC		+STKPRO: 64,<type>,<alpha>,<icon_id>,<bearer_type>,<bearer_parameters>,<buffer_size>,<network_access_name>,<login_dcs>,<login_text>,<password_dcs>,<password_text>,<transport_type>,<transport_port>,<destination_address_type>,<destination_address>	
Close channel			
URC		+STKPRO: 65,<type>,<channel_id>,<alpha>,<icon_id>	
Receive data			
URC		+STKPRO: 66,<type>,<channel_id>,<alpha>,<icon_id>,<channel_data_length>	
Send data			
URC		+STKPRO: 67,<type>,<channel_id>,<alpha>,<icon_id>,<channel_data>	

17.3.3 Defined values

Parameter	Type	Description
<proactive_cmd>	Number	Proactive command (see ETSI TS 102 223 [51])

Parameter	Type	Description
<alpha>, <alpha_1>, <alpha_2>	String	Alpha identifier (used in several proactive commands, see ETSI TS 102 223 [51])
<default_text>	String	Default text for the GET INPUT command (see ETSI TS 102 223 [51])
<dcs>	Number	Data coding scheme
<default_item>	Number	Indication of the default item (see ETSI TS 102 223 [51])
<dtmf_string>	String	DTMF tones coded in BCD (same format as the dialling number string defined for EF_{ADN} in 3GPP TS 51.011 [18])
<event list>	Number	Bitmask representing the list of events. See the Table 23 for the meaning of each bit.
<hex_string>	String	Hexadecimal string (the coding is specified in the <dcs> parameter)
<icon_id>,<icon_id1>, <icon_id2>	Number	Icon identifier
<icon_id_list_element>	Number	Item icon identifier
<interval>	Number	Time duration in number of units
<imm_resp>	Number	Immediate response
<item_id>	Number	Identifier of an item within a list
<item_text>	String	Text string of item
<language>	String	Two bytes string indicating the language
<max rsp len>	Number	Maximum response length
<min rsp len>	Number	Minimum response length
<next_action>	Number	Used only in menu related proactive commands ("set up menu" and "select item") for each item. It gives the possible actions that will be initiated by the SIM Card in case of selection by the user (see ETSI TS 102 223 [51])
<number>	String	Called party number
<ref_number>	Number	Reference number
<subaddr>	String	Called party subaddr
<ss_data>	String	Supplementary services string
<type>	Number	Command qualifier
<tone>	Number	• 01: dial tone • 02: call subscriber busy • 03: congestion • 04: radio path acknowledge • 05: radio path not available • 06: error / special information • 07: call waiting tone • 08: ringing tone • 10: general beep • 11: positive acknowledgement tone • 12: negative acknowledgement or error tone
<total_items>	Number	Total number of the menu items
<unit>	Number	• 0: minutes • 1: seconds • 2: tenth of seconds
<at_command>	String	AT command string
<bearer_type>	Number	Bearer type (see ETSI TS 102 223 [51])
<bearer_parameters>	String	Bearer parameters (see ETSI TS 102 223 [51])
<buffer_size>	Number	Buffer size (see ETSI TS 102 223 [51])
<network_access_name>	String	Network access name (see ETSI TS 102 223 [51])
<transport_type>	Number	Transport protocol type (see ETSI TS 102 223 [51])
<transport_port>	Number	Port number type (see ETSI TS 102 223 [51])
<destination_address_type>	Number	Type of address (see ETSI TS 102 223 [51])
<destination_address>	String	Address (see ETSI TS 102 223 [51])
<channel_id>	Number	Channel identifier (see ETSI TS 102 223 [51])

Parameter	Type	Description
<channel_data_length>	Number	Channel data length (see ETSI TS 102 223 [51])
<channel_data>	String	Channel data (see ETSI TS 102 223 [51])

17.3.4 Notes

Bit	Event description
0	MT call
1	Call connected
2	Call disconnected
3	Location status
4	User activity
5	Idle screen available
6	Card reader status
7	Language selection
8	Browser termination
9	Data available
10	Channel status
11	Access Technology Change
12	Display parameters changed
13	Local connection
14	Network Search Mode Change
15	Browsing status

Table 23: Event list bit description

SARA-G3 / LEON-G1

- <proactive_cmd>=52 is not supported.

17.4 Terminal response in dedicated mode +STKTR

+STKTR						
Modules	TOBY-L4					
	LARA-R2 TOBY-R2					
	SARA-U2 LISA-U2 LISA-U1					
	SARA-G3 LEON-G1					
Attributes	**Syntax**	**PIN required**	**Settings saved**	**Can be aborted**	**Response time**	**Error reference**
	partial	Yes	No	No	< 20 s	+CME Error

17.4.1 Description

In dedicated mode, it allows entering response to a SIM Toolkit proactive command displayed by the +STKPRO URC.

If no response is entered, after a timeout of duration may range from 180 to 300 s, the module sends an autonomous terminal response to the SIM to complete the STK transaction; the result depends on the pending proactive command and can be "Command performed successfully", "No response from user", "Command type not understood by ME" or "Command data not understood by ME" (see 3GPP TS 51.014 [44]).

The command must be always entered, to terminate the pending STK session at the MT-DTE interface, and to be able to enter additional STK commands.

The set command syntax depends on the <proactive_cmd> value.

17.4.2 Syntax

Type	Syntax	Response	Example
Generic syntax			
Set	AT+STKTR=<proactive_cmd>[,<type>][,<result>,<add_result>[,	OK	AT+STKTR=1,0

Type	Syntax	Response	Example
	<reference_number>][,<last_cmd>][,<dcs>][,<hex string>]]		OK
Refresh			
Set	AT+STKTR=01,<result>[,<add_result>]	OK	
Set up event list			
Set	AT+STKTR=05,<result>	OK	
Set up call			
Set	AT+STKTR=16,<result>[,<add_result>]	OK	
Send SS			
Set	AT+STKTR=17,<result>,<add_result>[,<reference_number>]	OK	
Send USSD			
Set	AT+STKTR=18,<result>,<add_result>[,<reference_number>]	OK	
Send SMS			
Set	AT+STKTR=19,<result>,<add_result>[,<reference_number>]	OK	
Send DTMF			
Set	AT+STKTR=20,<result>[,<add_result>]	OK	
Play tone			
Set	AT+STKTR=32,<result>,<add_result>	OK	
Display text			
Set	AT+STKTR=33,<result>,<add_result>	OK	
Get inkey			
Set	AT+STKTR=34,<result>,<add_result>,0,<dcs>,<hex_string>	OK	
Get input			
Set	AT+STKTR=35,<result>,<add_result>,0,<dcs>,<hex_string>	OK	
Select item			
Set	AT+STKTR=36,<result>,<add_result>,0,<dcs>,<hex_string>	OK	
Set up menu			
Set	AT+STKTR=37,<result>,<add_result>	OK	
Provide local info (language setting)			
Set	AT+STKTR=38,<result>,<language>	OK	
Set up idle mode text			
Set	AT+STKTR=40,<result>,<add_result>	OK	
Run AT command			
Set	AT+STKTR=52,<result>,<add_result>,0,<dcs>,<hex_string>	OK	
Language notification			
Set	AT+STKTR=53,<result>,<add_result>	OK	
Open channel			
Set	AT+STKTR=64,<result>	OK	
Test	AT+STKTR=?	+STKTR: (list of supported <proactive_cmd> values) OK	+STKTR: (01,05,16,17,18,19,20,32,33,34,35,36,37,38,40,52,53) OK

17.4.3 Defined values

Parameter	Type	Description
<proactive_cmd>	Number	Proactive command (see ETSI TS 102 223 [51])
<result>	Number	• 0: Command performed successfully • 1: Command performed with partial comprehension • 2: Command performed, with missing information • 3: REFRESH performed with additional EFs read • 4: Command performed successfully, but requested icon could not be displayed • 5: Command performed, but modified by call control by SIM • 6: Command performed successfully, limited service • 7: Command performed with modification • 16: Proactive SIM session terminated by the user • 17: Backward move in the proactive SIM session requested by the user • 18: No response from user • 19: Help information required by the user • 20: USSD or SS transaction terminated by the user • 32: MT currently unable to process command • 33: Network currently unable to process command • 34: User did not accept the proactive command • 35: User cleared down call before connection or network release • 36: Action in contradiction with the current timer state • 37: Interaction with call control by SIM, temporary problem • 38: Launch Browser generic error • 48: Command beyond MT's capabilities • 49: Command type not understood by MT • 50: Command data not understood by MT • 51: Command number not known by MT • 52: SS Return Error • 53: SMS RP-ERROR • 54: Error, required values are missing • 55: USSD Return Error • 56: MultipleCard commands error • 57: Interaction with call control by SIM or MO short message control by SIM, permanent problem • 58: Bearer Independent Protocol error
<add_result>	Number	Additional information, required with specific result codes and/or proactive commands
<reference_number>	Number	Number containing the indicated reference number; this parameter can be used only in case of <proactive_cmd> related to SMS, SS, USSD
<dcs>	Number	Data coding scheme
<hex_string>	String	Each 8-bit octet is presented as two IRA character long hexadecimal numbers, e.g. octet with integer value 42 is presented to TE as two characters 2A (IRA 50 and 65). The value depends on the indicated <dcs> value. The meaning of the parameter depends on the proactive command: • Get input: the response string • Get inkey: the response character • Select item: identifier of an item within a list • Run AT command: the response to the AT command requested by the SIM
<language>	String	Decimal value of the ISO 639 language code. E.g. German language is coded as "de" in ISO 639. Thus 0x6465 has to be converted in decimal: <language>=25701
<last_cmd>	Number	Obsolete parameter, to be set to 0

17.4.4 Notes

- *0 stands for the obsolete parameter <last_cmd>.

SARA-U2 / LISA-U2 / LISA-U1

- <reference_number> is not supported.

SARA-G3 / LEON-G1

- <proactive_cmd>=53 is not supported; in this case, the terminal response is automatically sent by the MT.

17.5 Proactive session status in dedicated mode +STKCNF

+STKCNF	
Modules	TOBY-L4
	LARA-R2 TOBY-R2
	SARA-U2 LISA-U2 LISA-U1
	SARA-G3 LEON-G1

17.5.1 Description

In dedicated mode, the URC +STKCNF displays the SIM card's toolkit application reply to a Terminal Response command or an Envelope command.

17.5.2 Syntax

Type	Syntax	Response	Example
URC		+STKCNF: <proactive_cmd>,<result>,<add_result>,<sw1>	+STKCNF: 37,0,255,144

17.5.3 Defined values

Parameter	Type	Description
<proactive_cmd>	Number	• 01: Refresh • 02: More time • 03: Poll interval • 04: Polling off • 05: Set up event list • 16: Set up call • 17: Send SS • 18: Send USSD • 19: Send SMS • 20: Send DTMF • 32: Play tone • 33: Display text • 34: Get inkey • 35: Get input • 36: Select item • 37: Set up menu • 38: Provide local info • 39: Timer management • 40: Set up idle mode text • 52: Run AT command • 53: Language notification • 64: Open channel • 65: Close channel • 66: Receive data • 67: Send data • 68: Get channel status • 129: Dummy value used to indicate that the response is relative to an ENVELOPE command
<result>	Number	General result code (see ETSI TS 102 223 [51])
<add_result>	Number	Additional information code (see ETSI TS 102 223 [51]). If no additional information is available 255 is returned
<sw1>	Number	Byte indicating the status of the UICC/SIM at the end of a command. • 144: command executed successfully

Parameter	Type	Description
		• For other responses see 3GPP TS 51.011 [18]

17.6 Bearer Independent Protocol status indication +UBIP

+UBIP						
Modules	TOBY-L4 TOBY-L200-02S TOBY-L200-03A TOBY-L200-03S TOBY-L201-02S TOBY-L210-02S TOBY-L210-03A TOBY-L210-03S TOBY-L210-62S TOBY-L220 TOBY-L280 MPCI-L200-02S MPCI-L200-03S MPCI-L201-02S MPCI-L210-02S MPCI-L210-03S MPCI-L220 MPCI-L280					
	LARA-R2 TOBY-R2					
	SARA-U201 SARA-U260-03S SARA-U270-03A SARA-U270-03S SARA-U270-04B SARA-U270-53S SARA-U270-73S SARA-U280-03S LISA-U200-03S LISA-U200-83S LISA-U201					
	SARA-G340-02S SARA-G340-02X SARA-G350-02A SARA-G350-02S SARA-G350-02X SARA-G350-53S					
Attributes	**Syntax**	**PIN required**	**Settings saved**	**Can be aborted**	**Response time**	**Error reference**
	full	No	NVM	No	-	+CME Error

17.6.1 Description

Configures the Bearer Independent Protocol status indication, i.e. the +UUBIP URC presentation.

☞ TOBY-L4 / TOBY-L2 / MPCI-L2 / LARA-R2 / TOBY-R2 / SARA-U2 / LISA-U2 / SARA-G3
Verify that the BIP related proactive commands and events are supported (see the +STKPROF and +UCATPROF AT commands).

17.6.2 Syntax

Type	Syntax	Response	Example
Set	AT+UBIP=<mode>	OK	AT+UBIP=1 OK
Read	AT+UBIP?	+UBIP: <mode> OK	+UBIP: 0 OK
Test	AT+UBIP=?	+UBIP: (list of supported <mode>'s) OK	+UBIP: (0,1) OK
URC		+UUBIP: <ev_cmd>,<val>	+UUBIP: 10,261

17.6.3 Defined values

Parameter	Type	Description
<mode>	Number	Indicates whether the +UUBIP URC is enabled or not: • 0 (factory-programmed value): BIP status indication disabled • 1: BIP status indication enabled • 2: OPEN CHANNEL, CLOSE CHANNEL and CHANNEL STATUS EVENT status indications enabled
<ev_cmd>	Number	Indicates the event download's tag or proactive command's tag. Allowed values: • 10: Channel status event • 64: Open channel proactive command • 65: Close channel proactive command • 66: Receive data proactive command • 67: Send data proactive command
<val>	Number	Indicates the channel status (in case of the event download channel status) or result in case of a proactive command (see ETSI TS 102 223 [51])

17.6.4 Notes

TOBY-L200-02S / TOBY-L210-02S / TOBY-L210-62S / TOBY-L220 / TOBY-L280-02S / MPCI-L200 / MPCI-L210 / MPCI-L220 / MPCI-L280 / LARA-R2 / TOBY-R2 / SARA-U2 / LISA-U2 / SARA-G3

- <mode>=2 is not supported.

TOBY-L200-03S / TOBY-L201-02S / TOBY-L210-03A / TOBY-L210-03S / TOBY-L280-03S / MPCI-L201-02S

- <mode>=2 is not supported by MPCI-L201-02S-00, TOBY-L200-03S-00, TOBY-L201-02S-00, TOBY-L210-03A-00, TOBY-L210-03S-00, TOBY-L280-03S-00.

17.7 Default BIP APN configuration +UBIPAPN

+UBIPAPN						
Modules	TOBY-L4					
	LARA-R2 TOBY-R2					
	SARA-U201 SARA-U270-04B					
Attributes	**Syntax**	**PIN required**	**Settings saved**	**Can be aborted**	**Response time**	**Error reference**
	full	No	NVM	No	-	+CME Error

17.7.1 Description

Configures the default BIP APN which will be used when the Open Channel command does not include the Network Access Name parameter or when the Network Access Name parameter is null.

17.7.2 Syntax

Type	Syntax	Response	Example
Set	AT+UBIPAPN=<APN>	OK	AT+UBIPAPN="APN_name" OK
Read	AT+UBIPAPN?	+UBIPAPN: <APN> OK	+UBIPAPN: "APN_name" OK

17.7.3 Defined values

Parameter	Type	Description
<APN>	String	Default Access Point Name for BIP service. The factory-programmed value is an empty string.

17.8 Envelope in dedicated mode +STKENV

+STKENV						
Modules	TOBY-L4					
	LARA-R2 TOBY-R2					
	SARA-U2 LISA-U2 LISA-U1					
	SARA-G3 LEON-G1					
Attributes	**Syntax**	**PIN required**	**Settings saved**	**Can be aborted**	**Response time**	**Error reference**
	full	Yes	No	No	< 20 s	+CME Error

17.8.1 Description

With the SIM toolkit interface enabled in dedicated mode, it allows encoding and sending an STK envelope command to the SIM.

17.8.2 Syntax

Type	Syntax	Response	Example
Set	AT+STKENV=<envelope_cmd>,<opt_ENV_data1>,<opt_ENV_data2>	OK	AT+STKENV=211,01 OK
Test	AT+STKENV=?	+STKENV: (list of supported <envelope_cmd> OK	+STKENV: 211,214 OK

17.8.3 Defined values

Parameter	Type	Description
<envelope_cmd>	Number	• code 211 (0xD3): menu selection (<opt_ENV_data1> shall specify the item identifier of startup menu list) • code 214 (0xD6): event download (<opt_ENV_data1> shall specify the <event_list>, in which only one event can be included)
<opt_ENV_data1>	Number	Command code related parameters and can have the following values, depending on the chosen envelope command: • If <envelope_cmd>=211, "item identifier" • If <envelope_cmd>=214 (event list), o 4: user activity o 5: idle screen available o 7: language selection o 8: browser termination
<opt_ENV_data2>	Number	Meaning depends on the chosen envelope command: • If <envelope_cmd>=211, "help requested" with the following encoding: o 0: help is not requested o 1: help is requested • If <envelope_cmd>=214 and <opt_ENV_data1>=7, "currently used language in the DTE" (see AT+STKTR=38)

17.9 Call and short message control in dedicated mode +STKCC

+STKCC	
Modules	TOBY-L4
	LARA-R2 TOBY-R2
	SARA-U2 LISA-U2 LISA-U1
	SARA-G3 LEON-G1

17.9.1 Description

In dedicated mode, the URC +STKCC reports indications of the call control and short message control by SIM (see 3GPP TS 51.014 [44]).

17.9.2 Syntax

Type	Syntax	Response	Example
URC		+STKCC: <cc_command>,<res_val>,<alpha>,<param1>[,<sc_addr>,<ton_npi>,<dest_addr>]	+STKCC: 1,0,"Calling","+3913456890"

17.9.3 Defined values

Parameter	Type	Description
<cc_command>	Number	• 1: set up call • 2: send SS • 3: send USSD • 4: send SMS
<res_val>	Number	Call control result value • 00: Allowed, no modification • 01: Not allowed • 02: Allowed with modification
<alpha>	String	
<param1>	String	• Called party number if <cc_command>=1 • Supplementary service string if <cc_command>=2 • USSD control string if <cc_command>=3 • Type of number and numbering plan if <cc_command>=4

Parameter	Type	Description
<sc_addr>	String	Service center address
<ton_npi>	Number	Type of number and numbering plan
<dest_addr>	String	Destination address

17.10 Proactive command indication in raw mode +SATI

+SATI	
Modules	LARA-R2 TOBY-R2
	SARA-U2 LISA-U2 LISA-U1

17.10.1 Description

Communicates to the user the proactive command, in raw mode, coming from the SIM.

The module expects a terminal response to be sent; the user shall respond with AT+SATR for sending the terminal response.

17.10.2 Syntax

Type	Syntax	Response	Example
URC		+SATI: <text>	+SATI: "D02081030 1250082028182050 C53544B2D4A617661436172648F0 30141411E020001"

17.10.3 Defined values

Parameter	Type	Description
<text>	String	Raw proactive command data expressed in Hex value

17.11 Proactive command notification in raw mode +SATN

+SATN	
Modules	LARA-R2 TOBY-R2
	SARA-U2 LISA-U2 LISA-U1

17.11.1 Description

Sends the proactive command in raw mode to the user in case the module handles the proactive command.

For this URC, the module does not expect any terminal response from the user, since the terminal response to SIM is autonomously sent by the device.

17.11.2 Syntax

Type	Syntax	Response	Example
URC		+SATN: <text>	+SATN: "D01A81030 1100082028183050 A63616C6C696E672E2E2E860 38121F3"

17.11.3 Defined values

Parameter	Type	Description
<text>	String	Raw proactive command data expressed in Hex value

17.12 Send terminal response in raw mode +SATR

+SATR						
Modules	LARA-R2 TOBY-R2					
	SARA-U2 LISA-U2 LISA-U1					
Attributes	**Syntax**	**PIN required**	**Settings saved**	**Can be aborted**	**Response time**	**Error reference**
	full	Yes	No	No	< 20 s	+CME Error

17.12.1 Description

In raw mode only, it is used to send the terminal response to the SIM after the URC +SATI has been received by the user.

17.12.2 Syntax

Type	Syntax	Response	Example
Set	AT+SATR=<text>	OK	AT+SATR="8103012400820 28281830100900101" OK

17.12.3 Defined values

Parameter	Type	Description
<text>	String	Raw terminal response data expressed in Hex value

17.13 Terminal response confirmation in raw mode +SATF

+SATF	
Modules	LARA-R2 TOBY-R2
	SARA-U2 LISA-U2 LISA-U1

17.13.1 Description

In raw mode, it provides the response to a terminal response (sent by the user or automatically by the module) from the SIM.

17.13.2 Syntax

Type	Syntax	Response	Example
URC		+SATF: <sw1>,<sw2>	+SATF: 144,0

17.13.3 Defined values

Parameter	Type	Description
<sw1>	Number	Status of the last response • 144 (0x90): command successfully executed • 0: command to SIM was suppressed because of multiple terminal response or wrong client For other responses see 3GPP TS 51.011 [18].
<sw2>	Number	The second status byte specifies additional information depending on <sw1>

17.14 User confirmation for setup call in raw mode +SATD

+SATD						
Modules	LARA-R2 TOBY-R2					
	SARA-U2 LISA-U2 LISA-U1					
Attributes	**Syntax**	**PIN required**	**Settings saved**	**Can be aborted**	**Response time**	**Error reference**
	full	Yes	No	No	< 20 s	+CME Error

17.14.1 Description

In raw mode only, the set command is used for the user confirmation required by the SET UP CALL proactive command. The user can accept the call or reject the call.

The set command is used as response to the +SATN URC sent to the user for SET UP CALL Proactive command.

17.14.2 Syntax

Type	Syntax	Response	Example
Set	AT+SATD=<user_confirmation>	OK	AT+SATD=1 OK
Test	AT+SATD=?	+SATD: (list of supported <user_confirmation>'s) OK	+SATD: (0,1) OK

17.14.3 Defined values

Parameter	Type	Description
<user_confirmation>	Number	• 0: reject the call • 1: accept the call

17.15 Envelope download in raw mode +SATE

+SATE						
Modules	LARA-R2 TOBY-R2					
	SARA-U2 LISA-U2 LISA-U1					
Attributes	**Syntax**	**PIN required**	**Settings saved**	**Can be aborted**	**Response time**	**Error reference**
	full	Yes	No	No	< 20 s	+CME Error

17.15.1 Description

In raw mode, it sends the raw envelope data to the SIM.

17.15.2 Syntax

Type	Syntax	Response	Example
Set	AT+SATE=<text>	+SATE: <sw1>,<sw2>,<envelope_type>,<event_type> OK	AT+SATE="d30782020181900101" +SATE: 145,111,211,255 OK

17.15.3 Defined values

Parameter	Type	Description
<text>	String	Raw envelope data expressed in Hex value
<sw1>	Number	Status of the last response: • 0: command to SIM was suppressed because of multiple terminal response or wrong client • 144 (0x90): command successfully executed For other responses see 3GPP TS 51.011 [18].
<sw2>	Number	Specifies the additional information depending on <sw1>

Parameter	Type	Description
<envelope_type>	Number	• 211 (0xD3): menu selection • 214 (0xD6): event download
<event_type>	Number	If <envelope_type>=214 (event list): • 4: user activity • 5: idle screen available • 7: language selection

17.16 Call and Short Message Control in Raw Mode +STKCTRLIND

+STKCTRLIND						
Modules	LARA-R2 TOBY-R2					
	SARA-U2 LISA-U2 LISA-U1					
Attributes	Syntax	PIN required	Settings saved	Can be aborted	Response time	Error reference
	full	No	No	No	-	-

17.16.1 Description

The test command lists the supported call and SMS control types.

In raw mode, the URC +STKCTRLIND is an unsolicited indication for control actions performed by the SIM on mobile originated calls and short messages.

17.16.2 Syntax

Type	Syntax	Response	Example
Test	AT+STKCTRLIND=?	+STKCTRLIND: (range of supported <type>) OK	+STKCTRLIND: (0-3) OK
URC		"set up call" type: +STKCTRLIND: 0,<result>,<alpha_id>,<destination_address>,<destination_address_type> "send SS" type: +STKCTRLIND: 1,<result>,<alpha_id>,<destination_address>,<destination_address_type> "send USSD" type: +STKCTRLIND: 2,<result>,<alpha_id>, <dcs>, <data> "send SMS" type: +STKCTRLIND: 3,<result>,<alpha_id>,<destination_address>,<destination_address_type>,<service_center_address>,<service_center_address_type>	

17.16.3 Defined values

Parameter	Type	Description
<type>	Number	• 0: setup call • 1: send SS • 2: send USSD • 3: send SMS
<result>	Number	• 0: the request is allowed without modifications • 1: the request is not allowed. No action shall be performed • 2: the request is modified, but allowed. The modified values shall be used

Parameter	Type	Description
		• 254: the toolkit is busy. The request shall be repeated later without taking any action in between • 255: error happened
<alpha_id>	String	Alpha identifier
<destination_address>	String	Dialling number
<destination_address_type>	Number	Type of number and numbering plan
<service_center_address>	String	Service center address
<service_center_address_type>	Number	Type of number and numbering plan
<dcs>	Number	Data Coding Scheme
<data>	String	USSD string

17.17 Terminal profile +UCATPROF

+UCATPROF						
Modules	TOBY-L2 MPCI-L2					
Attributes	Syntax	PIN required	Settings saved	Can be aborted	Response time	Error reference
	full	Yes	No	No	-	+CME Error

17.17.1 Description

Allows reading and changing the current terminal profile (i.e. the list of SIM Application Toolkit facilities supported by the terminal, see ETSI TS 102 223 [51]) sent to the SIM card; if the terminal profile has changed, it is downloaded to the SIM card. Changes in the terminal profile are not persistent after reboot. The SIM card may use this information to filter the proactive commands sent to the module. This command does not actually remove/add any functionality from/to the module.

17.17.2 Syntax

Type	Syntax	Response	Example
Set	AT+UCATPROF=<length>,<data>	OK	AT+UCATPROF=2,"1F7F" OK
Read	AT+UCATPROF?	+UCATPROF: <length>,<data> OK	+UCATPROF:17,"FFFFFFFF7F0300DF7F00000000010A0003" OK
Test	AT+UCATPROF=?	OK	

17.17.3 Defined values

See +STKPROF Defined values.

17.18 Proactive command indication in dedicated mode +UCATPROI

+UCATPROI						
Modules	TOBY-L2 MPCI-L2					
Attributes	Syntax	PIN required	Settings saved	Can be aborted	Response time	Error reference
	full	Yes	No	No	-	+CME Error

17.18.1 Description

In dedicated mode, during the STK transactions, the +UCATPROI URC displays proactive commands coming from the SIM that require a response from the user via +UCATTR command.

The test command displays the list of such proactive commands. Only the test command syntax is allowed.

17.18.2 Syntax

Type	Syntax	Response	Example
Test	AT+UCATPROI=?	+UCATPROI: (list of supported <proactive_cmd>s) OK	+UCATPROI: (01,05,16,32,33,34,35,36,37,38,40,52,53,64) OK
Generic syntax			
URC		+UCATPROI: <proactive_cmd>,...	
Refresh			
URC		+UCATPROI: 01,<type>,<number of files>,<files>	
Set up event list			
URC		+UCATPROI: 05,<event_list>	
Set up call			
URC		+UCATPROI: 16,<number>,<subaddr>,<type>,<alpha_1>, <icon_id1>,<alpha_2>,<icon_id2>	
Play tone			
URC		+UCATPROI: 32,<tone>,<unit>,<interval>,<alpha>, <icon_id>	
Display text			
URC		+UCATPROI: 33,<type>,<dcs>,<hex_string>,<icon_id>, <imm_resp>	
Get inkey			
URC		+UCATPROI: 34,<type>,<dcs>,<hex_string>,<icon_id>	
Get input			
URC		+UCATPROI: 35,<type>,<dcs>,<hex_string>, <max_rsp_len>,<min_rsp_len>,<default_text>,<icon_id>	
Select item			
URC		+UCATPROI: 36,<type>,<alpha>,<item_id>,<total_items>, <item_text>,<next_action>,<default_item>,<icon_id>,<icon_id_list_element>	
Set up menu			
URC		+UCATPROI: 37,<type>,<alpha>,<item_id>,<total_items>, <item_text>,<next_action>,<icon_id>,<icon_id_list_element>	
Provide local info			
URC		+UCATPROI: 38,<type>	
Set up idle mode text			
URC		+UCATPROI: 40,<dcs>,<hex_string>,<icon_id>	
Run AT command			
URC		+UCATPROI: 52,<type>,<alpha>,<icon_id>,<at_command>	
Language notification			
URC		+UCATPROI: 53,<language>	
Open channel			
URC		+UCATPROI: 64,<alpha>	

17.18.3 Defined values

See +STKPRO.

17.18.4 Notes

TOBY-L200-00S / TOBY-L210-00S / TOBY-L210-60S / MPCI-L200-00S / MPCI-L210-00S

- <proactive_cmd>=64 is not supported.

17.19 Proactive command notification in dedicated mode +UCATPRON

+UCATPRON						
Modules	TOBY-L2 MPCI-L2					
Attributes	**Syntax**	**PIN required**	**Settings saved**	**Can be aborted**	**Response time**	**Error reference**
	full	Yes	No	No	-	+CME Error

17.19.1 Description

In dedicated mode, during the STK transactions, the +UCATPRON URC displays proactive commands coming from the SIM that do not require a response from the user.

The test command displays the list of such proactive commands. Only the test command syntax is allowed.

17.19.2 Syntax

Type	Syntax	Response	Example
Test	AT+UCATPRON=?	+UCATPRON: (list of supported <proactive_cmd>s) OK	+UCATPRON: (17,18,19,20,37) OK
Send SS			
URC		+UCATPRON: 17,<ss_data>,<alpha>,<icon_id>	
Send USSD			
URC		+UCATPRON: 18,<dcs>,<hex_string>,<alpha>,<icon_id>	
Send SMS			
URC		+UCATPRON: 19,<alpha>,<icon_id>	
Send DTMF			
URC		+UCATPRON: 20,<alpha>,<icon_id>,<dtmf_string>	
Set up menu			
URC		+UCATPRON: 37,<type>,<alpha>,<item_id>,<total_items>,<item_text>,<next_action>,<icon_id>,<icon_id_list_element>	

17.19.3 Defined values

See +STKPRO.

17.20 Terminal response in dedicated mode +UCATTR

+UCATTR						
Modules	TOBY-L2 MPCI-L2					
Attributes	**Syntax**	**PIN required**	**Settings saved**	**Can be aborted**	**Response time**	**Error reference**
	full	Yes	No	No	< 20 s	+CME Error

17.20.1 Description

In dedicated mode, it allows entering the response to a SIM Toolkit proactive command displayed by the +UCATPROI URC.

If no response is entered, after a timeout whose duration may range from 180 to 300 s, the module sends an autonomous terminal response to the SIM to complete the STK transaction; the result depends on the pending proactive command and can be "Command performed successfully", "No response from user", "Command type not understood by ME" or "Command data not understood by ME" (see 3GPP TS 51.014 [44]).

The command must be always entered, to terminate the pending STK session at the MT-DTE interface, and to be able to enter additional STK commands.

The set command syntax depends on the <proactive_cmd> value.

17.20.2 Syntax

Type	Syntax	Response	Example
Generic syntax			
Set	AT+UCATTR=<proactive_cmd>[,<type>][,<result>,<add_result>[,<reference_number>][,<last_cmd>][,<dcs>][,<hex string>]]	OK	AT+UCATTR=1,0 OK
Refresh			
Set	AT+UCATTR=01,<result>[,<add_result>]	OK	
Set up event list			
Set	AT+UCATTR=05,<result>	OK	
Set up call			
Set	AT+UCATTR=16,<result>[,<add_result>]	OK	
Play tone			
Set	AT+UCATTR=32,<result>,<add_result>	OK	
Display text			
Set	AT+UCATTR=33,<result>,<add_result>	OK	
Get inkey			
Set	AT+UCATTR=34,<result>,<add_result>,0,<dcs>,<hex_string>	OK	
Get input			
Set	AT+UCATTR=35,<result>,<add_result>,0,<dcs>,<hex_string>	OK	
Select item			
Set	AT+UCATTR=36,<result>,<add_result>,0,<dcs>,<hex_string>	OK	
Set up menu			
Set	AT+UCATTR=37,<result>,<add_result>	OK	
Provide local info (language setting)			
Set	AT+UCATTR=38,<type>,<language>	OK	
Set up idle mode text			
Set	AT+UCATTR=40,<result>,<add_result>	OK	
Run AT command			
Set	AT+UCATTR=52,<result>,<add_result>,0,<dcs>,<hex_string>	OK	
Language notification			
Set	AT+UCATTR=53,<result>,<add_result>	OK	
Open channel			
Set	AT+UCATTR=64,<result>,<add_result>	OK	
Test	AT+UCATTR=?	+UCATTR: (list of supported <result>s) OK	+UCATTR: (01,05,16,32,33,34,35,36,37,38,40,52,53,64) OK

17.20.3 Defined values

See +STKTR Defined values.

17.20.4 Notes

TOBY-L200-00S / TOBY-L210-00S / TOBY-L210-60S / MPCI-L200-00S / MPCI-L210-00S

- <proactive_cmd>=64 is not supported.

17.21 Proactive Session Status in Dedicated Mode +UCATCNF

+UCATCNF	
Modules	TOBY-L2 MPCI-L2

17.21.1 Description

In dedicated mode, the status of the STK proactive session is displayed using the +UCATCNF URC. The URC comes out after the AT+UCATTR or the AT+UCATENV command has been issued.

17.21.2 Syntax

Type	Syntax	Response	Example
URC		+UCATCNF: <proactive_cmd>,<result>,<add_result>,<sw1>	+UCATCNF: 37,0,255,144

17.21.3 Defined values

See +STKCNF Defined values.

17.22 Envelope in Dedicated Mode +UCATENV

+UCATENV						
Modules	TOBY-L2 MPCI-L2					
Attributes	**Syntax**	**PIN required**	**Settings saved**	**Can be aborted**	**Response time**	**Error reference**
	full	Yes	No	No	< 20 s	+CME Error

17.22.1 Description

In dedicated mode, it allows encoding and sending an STK envelope command to the SIM.

17.22.2 Syntax

Type	Syntax	Response	Example
Set	AT+UCATENV=<envelope_cmd>,<opt_ENV_data1>,<opt_ENV_data2>	OK	AT+UCATENV=211,01 OK
Test	AT+UCATENV=?	+UCATENV: (list of supported <envelope_cmd> OK	+UCATENV: 211,214 OK

17.22.3 Defined values

See +STKENV Defined values.

17.23 Call and Short Message Control in Dedicated Mode +UCATCC

+UCATCC	
Modules	TOBY-L2 MPCI-L2

17.23.1 Description

In dedicated mode, the indication of the call control and short message control by SIM (see 3GPP TS 51.014 [44]) is performed using the +UCATCC URC.

17.23.2 Syntax

Type	Syntax	Response	Example
URC		+UCATCC: <cc_command>,<res_val>,<alpha>,<param1>[,<sc_addr>,<ton_npi>,<dest_addr>]	+UCATCC: 1,0,"Calling", "+3913456890"

17.23.3 Defined values

See +STKCC Defined values.

17.24 Proactive Command Indication in Raw Mode +URCATI

+URCATI	
Modules	TOBY-L2 MPCI-L2

17.24.1 Description

During the STK transactions, the +URCATI URC displays proactive commands coming from the SIM that require a response from the user in raw mode.

The module expects a terminal response to be sent; the user shall respond with AT+URCATR for sending the terminal response.

☞ This URC may be issued only if the SIM toolkit interface is enabled in raw mode.

17.24.2 Syntax

Type	Syntax	Response	Example
URC		+URCATI: <text>	+URCATI: "D020810 30125008202818205 0C53544B2D4A61766143617264 8F030141411E020001"

17.24.3 Defined values

Parameter	Type	Description
<text>	String	Raw proactive command data expressed in Hex value

17.25 Proactive Command Notification in Raw Mode +URCATN

+URCATN	
Modules	TOBY-L2 MPCI-L2

17.25.1 Description

Notifies the proactive command in raw mode to the user when the module autonomously handles the proactive command.

For this URC, the module does not expect any terminal response from the user, since the terminal response to the SIM is built within the module and automatically sent.

17.25.2 Syntax

Type	Syntax	Response	Example
URC		+URCATN: <text>	+URCATN: "D01A810 30110008202818305 0A63616C6C696E672E2E2E860 38121F3"

17.25.3 Defined values

Parameter	Type	Description
<text>	String	Raw proactive command data expressed in Hex value

17.26 Terminal response in Raw Mode +URCATR

+URCATR						
Modules	TOBY-L2 MPCI-L2					
Attributes	Syntax	PIN required	Settings saved	Can be aborted	Response time	Error reference
	full	Yes	No	No	< 20 s	+CME Error

17.26.1 Description

In raw mode, it allows entering the response to a SIM Toolkit proactive command displayed by the +URCATI URC.

If no response is entered, after a timeout whose duration may range from 180 to 300 s, the module sends an autonomous terminal response to the SIM to complete the STK transaction; the result depends on the pending proactive command and can be "Command performed successfully", "No response from user", "Command type not understood by ME" or "Command data not understood by ME" (see 3GPP TS 51.014 [44]).

The command must be always entered, to terminate the pending STK session at the MT-DTE interface, and to be able to enter additional STK commands.

The set command syntax depend on the <proactive_cmd> value.

17.26.2 Syntax

Type	Syntax	Response	Example
Set	AT+URCATR=<text>	OK	AT+URCATR="8103012400820 28281830100900101" OK

17.26.3 Defined values

Parameter	Type	Description
<text>	String	Raw terminal response data expressed in Hex value

17.27 Proactive Session Status in Raw Mode +URCATF

+URCATF	
Modules	TOBY-L2 MPCI-L2

17.27.1 Description

In raw mode, it provides the response received from the SIM to a terminal response (sent by the user or automatically by the module) .

17.27.2 Syntax

Type	Syntax	Response	Example
URC		+URCATF: <sw1>,<sw2>	+URCATF: 144,0

17.27.3 Defined values

See +SATF.

17.28 Envelope in Raw Mode +URCATE

+URCATE						
Modules	TOBY-L2 MPCI-L2					
Attributes	Syntax	PIN required	Settings saved	Can be aborted	Response time	Error reference
	full	No	No	No	< 20 s	+CME Error

17.28.1 Description

In raw mode, it sends the raw envelope data to the SIM and returns the result of the SIM instruction.

17.28.2 Syntax

Type	Syntax	Response	Example
Set	AT+URCATE=<text>	+URCATE: <sw1>,<sw2>,<envelope_type>,<event_type> OK	AT+URCATE="d3078202018190010 1" +URCATE: 145,111,211,255 OK

17.28.3 Defined values

See +SATE.

17.29 Call and Short Message Control in Raw Mode +URCATCC

+URCATCC						
Modules	TOBY-L2 MPCI-L2					
Attributes	**Syntax**	**PIN required**	**Settings saved**	**Can be aborted**	**Response time**	**Error reference**
	full	No	No	No	-	+CME Error

17.29.1 Description

In raw mode, +URCATCC is the unsolicited indication of Call Control and SMS Control carried out by the SIM on mobile originated service requests.

17.29.2 Syntax

Type	Syntax	Response	Example
Test	AT+URCATCC=?	+URCATCC: (range of supported <type>) OK	+URCATCC: (0-3) OK
URC		"set up call" type: +URCATCC: 0,<result>,<alpha_id>,<destination_address>,<destination_address_type>	
		"send SS" type: +URCATCC: 1,<result>,<alpha_id>,<destination_address>,<destination_address_type>	
		"send USSD" type: +URCATCC: 2,<result>,<alpha_id>,<dcs>,<data>	
		"send SMS" type: +URCATCC: 3,<result>,<alpha_id>,<destination_address>,<destination_address_type>,<service_center_address>,<service_center_address_type>	

17.29.3 Defined values

See +STKCTRLIND.

17.30 User setting for proactive DTMF tone generation +UDTMF

+UDTMF						
Modules	TOBY-L4 TOBY-L200-02S TOBY-L200-03A TOBY-L200-03S TOBY-L210-02S TOBY-L210-03A TOBY-L210-03S TOBY-L210-62S TOBY-L220-02S TOBY-L280 MPCI-L200-02S MPCI-L200-03S MPCI-L210-02S MPCI-L210-03S MPCI-L220-02S MPCI-L280					
	LARA-R202 LARA-R203 LARA-R211 LARA-R280 TOBY-R2					
	SARA-U2 LISA-U200-01S LISA-U200-02S LISA-U200-03S LISA-U200-52S LISA-U200-62S LISA-U200-83S LISA-U201 LISA-U230 LISA-U260 LISA-U270 LISA-U120 LISA-U130					
Attributes	Syntax	PIN required	Settings saved	Can be aborted	Response time	Error reference
	partial	No	NVM	No	-	+CME Error

17.30.1 Description

On a request from the SIM toolkit of proactive DTMF tone generation (SEND DTMF), the <mode> parameter controls whether the request of DTMF tone generation is performed or it is not.

☞ TOBY-L2 / MPCI-L2
The read command is not supported.

17.30.2 Syntax

Type	Syntax	Response	Example
Set	AT+UDTMF=<mode>	OK	AT+UDTMF=1 OK
Read	AT+UDTMF?	+UDTMF: <mode> OK	+UDTMF: 1 OK
Test	AT+UDTMF=?	+UDTMF: (list of supported <mode>s) OK	+UDTMF: (0-1) OK

17.30.3 Defined values

Parameter	Type	Description
<mode>	Number	Indicates the working mode in relation to DTMF tone generation via SIM-TK. Allowed values: • 0: disable the DTMF tone generation (the terminal response is "Proactive SIM session terminated by user") • 1 (factory-programmed value): enable the DTMF tone generation (the terminal response is encoded according to the result)

17.31 Refresh delay events management +UDCONF=54

+UDCONF=54						
Modules	SARA-U201 SARA-U270-04B SARA-U270-53S					
Attributes	Syntax	PIN required	Settings saved	Can be aborted	Response time	Error reference
	full	No	NVM	No	-	+CME Error

17.31.1 Description

If a REFRESH command is received while in a state where execution of the command would be unacceptable, upsetting the current user operation (e.g. notification during a call that the IMSI has changed), the terminal should inform the UICC using a negative TERMINAL RESPONSE (e.g. terminal currently unable to process command).

In some cases it may be preferred to delay the command execution instead of sending a negative TR. For example, if dedicated (+CFUN=6) / raw (+CFUN=9) is not enabled, when a REFRESH is fetched no indication is sent to the DTE, and thus if the DCE is in connected state, the command will not be executed.

The <delay_events> setting with the addition of +USIMSTAT reporting permits the DTE to take action, e.g. release a voice call, and consequently execute the REFRESH command.

☞ During the certification process, the default configuration <delay_events>=8 is recommended.

17.31.2 Syntax

Type	Syntax	Response	Example
Set	AT+UDCONF=54,<delay_events>	OK	AT+UDCONF=54,8 OK
Read	AT+UDCONF=54	+UDCONF: 54,<delay_events> OK	+UDCONF: 54,8 OK

17.31.3 Defined values

Parameter	Type	Description
<delay_events>	Number	Bitmap representing the events which will delay a REFRESH command instead of sending a negative TERMINAL RESPONSE (e.g. terminal currently unable to process command). See Table 24 for the meaning of each bit. The factory-programmed value is 8.

17.31.4 Notes

-

Bit	Delay events
0	PPP connection active, (U)SIM toolkit REFRESH proactive command delayed till PPP deactivation
1	Voice call ongoing, (U)SIM toolkit REFRESH proactive command delayed till call release
2	CSD call ongoing, (U)SIM toolkit REFRESH proactive command delayed till call release
3	ENVELOPE, SMS-PP download

Table 24: <delay_events> bitmap meaning

- If a PPP connection is active, and its delay bit is not set, the REFRESH command will be executed instead of sending a negative TR.

SARA-U270-53S

- The command is not supported by SARA-U270-53S-00.

18 Packet switched data services

18.1 PDP contexts and parameter definition

18.1.1 Primary and secondary PDP contexts

A PDP context can be either **primary** or **secondary**. In LTE, PS data connections are referred to as EPS bearers: EPS bearers are conceptually equivalent to the legacy PDP contexts, which are often referred to for sake of simplicity. Similarly to a PDP context, the EPS bearer can be a default (primary) or dedicated (secondary) one. The initial EPS bearer established during LTE attach procedure is actually a default EPS bearer. A secondary PDP context uses the same IP address of a primary PDP context (the usual PDP context activated e.g. via dial-up). The Traffic Flow Filters for such secondary contexts shall be specified according to 3GPP TS 23.060 [10].

The typical usage of the secondary PDP contexts is in VoIP calls, where RTP (speech) packets are conveyed on one PDP context (e.g. the primary one) with a given QoS (e.g. low reliability) whereas SIP signalling is routed on a different PDP context (e.g. the secondary one, with the same IP address but different port numbers) with a more reliable QoS.

A Traffic Flow Template (i.e. a filter based on port number, specifying relative flow precedence) shall be configured for the secondary context to instruct the GGSN to route down-link packets onto different QoS flows towards the TE.

☞ TOBY-L2 / MPCI-L2
The TFT filter can be applied also on uplink packets: in this case the filter has a local scope, as it instructs the MT to route a packet of a given source or destination address on a specific radio bearer to achieve the negotiated QoS

PDP context type	Activation procedure
Primary	Used to establish a logical connection through the network from the UE to the GGSN with a specifically negotiated Quality of Service (QoS). The UE initiates the PDP context activation: it changes the session management state to active, creates the PDP context, obtains the IP address and reserves radio resources. After the activation, the UE is able to send IP packets over the air interface.
Secondary	Used to establish a second PDP context with the same IP address and the same APN as the primary PDP context. The two contexts may have different QoS profiles, which makes the feature useful for applications that have different QoS requirements (e.g. IP multimedia); QoS is applied based on port number addressing.

☞ SARA-G4 / SARA-G3 / LEON-G1
The secondary PDP contexts are not supported.

☞ TOBY-L2 / MPCI-L2
At most 8 PDP contexts can be theoretically defined and activated, both by the UE and the NW, as network initiated PDP context activation is supported (and by default accepted) by the UE.

☞ TOBY-L2 / MPCI-L2
At most 3 PDP contexts can be used with dial-up; further constraints may derive from the current USB connectivity configuration, e.g. from the number of CDC-ACMs supporting AT interface (see the +UUSBCONF command description)).

☞ TOBY-L4 / LARA-R2 / TOBY-R2 / SARA-U2 / LISA-U2 / LISA-U1
At most 2 secondary PDP contexts may be associated to a primary PDP context and at most 2 secondary PDP contexts can be activated, since the maximum number of PDP contexts, both normal and secondary, is always 3.

18.1.2 Multiple PDP contexts

Two PDP context types are defined:

- "external" PDP context: IP packets are built by the DTE, the MT's IP instance runs the IP relay function only;

- "internal" PDP context: the PDP context (relying on the MT's embedded TCP/IP stack) is configured, established and handled via the data connection management AT commands.

☞ TOBY-L2 / MPCI-L2 / LARA-R2 / TOBY-R2 / SARA-U2 / LISA-U2 / LISA-U1 / SARA-G4 / SARA-G340 / SARA-G350 / LEON-G1
Refer to +UPSD, +UPSDA and +UPSND AT commands to configure and establish a PDP context (relying on the MT's embedded TCP/IP stack).

Multiple PDP contexts are supported. The DTE can access these PDP contexts either alternatively through the physical serial interface, or simultaneously through the virtual serial ports of the multiplexer (multiplexing mode MUX), with the following constraints:

- Using the MT's embedded TCP/IP stack, only a internal PDP context is supported. This IP instance supports up to 7 sockets;
- Using only external PDP contexts, it is possible to have at most 3 IP instances (with 3 different IP addresses) simultaneously active. If in addition the internal PDP context is used, at most 2 external PDP contexts can be activated.

☞ SARA-G300 / SARA-G310
Multiple PDP contexts and internal PDP contexts are not supported.

☞ LEON-G1
Using the MT's embedded TCP/IP stack, the IP instance supports up to 16 sockets.

18.1.3 Parameter definition

18.1.3.1 <APN>

The Access Point Name (APN) is a string parameter, which is a logical name, valid in the current PLMN's domain, used to select the GGSN (Gateway GPRS Support Node) or the external packet data network to be connected to. The APN can be omitted: this is the so-called "blank APN" setting that may be suggested by network operators (e.g. to roaming devices); in this case the APN string is not included in the message sent to the network.

The maximum length of the parameter is 99 characters (the maximum length of coded APN is 100 octets, see 3GPP TS 23.003 [117], subclause 9.1).

☞ LARA-R2 / TOBY-R2 / SARA-U2 / LISA-U2 / LISA-U1 / SARA-G4 / SARA-G3 / LEON-G1
An optional special code placed at the beginning of <APN> indicates the type of authentication handling between the module and the network and may be:

- CHAP: challenge handshake authentication protocol
- PAP: personal authentication protocol
- NOAUTH: authentication protocol not used
- code omitted: authentication protocol not used

An example for the usage of <APN> is:

```
AT+CGDCONT=1,"IP","CHAP:internet.t-d1.de"
```

The information text response to the +CGDCONT read command does not include the PAP: and CHAP: prefixes in the APN string.

☞ TOBY-L2 / MPCI-L2
The optional authentication special code is not supported. The +UAUTHREQ command should be used after the context definition.
"Blank APN" is not supported in Verizon configuration (see +UMNOCONF) except for LTE attach. In other RATs and for additional default EPS bearer activations, a non-empty APN shall be configured.

☞ SARA-G4
The maximum length of the parameter is 95 characters.

18.1.3.2 <cid>

PDP context identifier. A numeric parameter specifying a particular PDP context definition. This parameter is valid only locally on the interface DTE-MT.

The maximum number of definable and active PDP contexts depend(s) on the product version:[2]

Product	Max number of definable PDP contexts	Max number of active PDP contexts
TOBY-L4	4	4
TOBY-L2 / MPCI-L2	8	8
LARA-R204	11	8
LARA-R202 / LARA-R203 / LARA-R211 / LARA-R220 / LARA-R280 / TOBY-R2	10	8
SARA-U2 / LISA-U200-02S / LISA-U200-03S / LISA-U200-52S / LISA-U200-83S / LISA-U201 / LISA-U260-02S / LISA-U270-02S / LISA-U270-62S / LISA-U270-63S / LISA-U270-68S	11	3
LISA-U200-00S / LISA-U200-01S / LISA-U230 / LISA-U260-01S / LISA-U270-01S / LISA-U1 / SARA-G4 / SARA-G3 / LEON-G1	3	3
SARA-U201-63B / LISA-U200-62S	10	3

☞ TOBY-L2 / MPCI-L2
When the local dial-up feature is available, it can be enabled using the PDP context identifier 100. This PDP context identifier is not related with the cellular network PDP contexts/EPS bearers.

☞ TOBY-L2 / MPCI-L2
When registering in LTE, <cid>= 4 is mapped to the initial default EPS bearer (see +UCGDFLT AT command for details).

☞ LARA-R2 / TOBY-R2
The <cid> of PDP contexts/EPS bearers defined by IMS, BIP and OMA-DM internal clients are defined in the range that goes from 31 to 50. Their parameters can be read but cannot be modified through AT commands.

☞ TOBY-L4 / LARA-R2 / TOBY-R2
When registering in LTE, <cid>= 1 is mapped to the initial default EPS bearer.

☞ LARA-R202 / LARA-R203 / TOBY-R2
Check that the XCAP APN configuration is correct for the current network operator (see +UIMSCFG AT command, key 200). If the XCAP APN is the same of the general purpose APN (i.e. APN for internet connection), then configure the supplementary services before performing a dial-up. In case the dial-up feature is already started, terminate it before to configure supplementary services AT commands. This is a requirement for products AT&T certified: supplementary services AT commands require XCAP to correctly run over the APN "nxtgenphone" (<cid>=1). In case the APN is reserved for dial-up feature the AT commands will provide an error result code.

18.1.3.3 <PDP_addr>

String parameter identifying the MT in the IP-address space applicable to the PDP service. If the value is null or omitted (dynamic IP addressing), then a value may be provided by the DTE during the PDP startup procedure or, failing that, a dynamic address will be requested via DHCP. It can be read with the command AT+CGPADDR or AT+CGDCONT read command.

To request a static IP address, a fixed IP address shall be specified for the <PDP_addr> paramater of the +CGDCONT set command and the user shall not rely on PPP negotiation via IPCP CONFREQ option.

Depending on the IP-version, the <PDP_addr> consists of 4 octets (IPv4) or 16 octets (IPv6):

- IPv4: "ddd.ddd.ddd.ddd"
- IPv4v6: "ddd.ddd.ddd.ddd ddd.ddd.ddd.ddd.ddd.ddd.ddd.ddd.ddd.ddd.ddd.ddd.ddd.ddd.ddd.ddd"
- IPv6: "ddd.ddd.ddd.ddd.ddd.ddd.ddd.ddd.ddd.ddd.ddd.ddd.ddd.ddd.ddd.ddd"

☞ TOBY-L4
In the IPv4v6 PDP address the IPv4 and IPv6 addresses are separated by an ".".

☞ LISA-U200-00S / LISA-U200-01S / LISA-U200-02S / LISA-U200-52S / LISA-U200-62S / LISA-U230 / LISA-U260 / LISA-U270 / LISA-U1 / SARA-G300 / SARA-G310 / SARA-G340-00S / SARA-G340-01S / SARA-G350-00S / SARA-G350-00X / SARA-G350-01B / SARA-G350-01S / LEON-G1

[2] The maximum number of active PDP contexts may be limited by the MNO

The IPv6 stack for an external context is not supported: hence the IP-addresses for IPv4v6 and IPv6 protocols are not supported.

18.1.3.4 <PDP_type>

The Packet Data Protocol (PDP) type is a string parameter which specifies the type of packet data protocol:

- "IP" (default value): Internet Protocol (IETF STD 5)
- "NONIP": Non IP
- "IPV4V6": virtual <PDP_type> introduced to handle dual IP stack UE capability (see the 3GPP TS 24.301 [88])

☞ TOBY-L201-01S / MPCI-L201-01S
On TOBY-L201-01S, TOBY-L201-02S-00, MPCI-L201-01S, MPCI-L201-02S-00 the "IPV4V6" configuration is allowed only if the <MNO> parameter of AT+UMNOCONF command is set to Verizon or regulatory only.

☞ TOBY-L201-02S / MPCI-L201-02S
On TOBY-L201-02S-00, MPCI-L201-02S-00 the "IPV4V6" configuration is allowed only if the <MNO> parameter of AT+UMNOCONF command is set to Verizon or regulatory only.

☞ LISA-U200-00S / LISA-U200-01S / LISA-U200-02S / LISA-U200-52S / LISA-U200-62S / LISA-U230 / LISA-U260 / LISA-U270 / LISA-U1 / SARA-G300 / SARA-G310 / SARA-G340-00S / SARA-G340-01S / SARA-G350-00S / SARA-G350-00X / SARA-G350-01B / SARA-G350-01S / LEON-G1
The IPv6 stack for an external context is not supported: hence the "IPV4V6" value is not supported.

☞ TOBY-L200-00S / TOBY-L200-02S / MPCI-L200
On TOBY-L200-02S, TOBY-L200-03S-00, MPCI-L200-00S, MPCI-L200-02S, MPCI-L200-03S-00 the IPv6 stack for an external context is not supported: hence the "IPV4V6" value is not supported.

☞ TOBY-L200-03S
On TOBY-L200-03S-00 the IPv6 stack for an external context is not supported: hence the "IPV4V6" value is not supported.

- "IPV6": Internet Protocol, version 6 (see RFC 2460)

☞ TOBY-L201-01S / MPCI-L201-01S
On TOBY-L201-01S, TOBY-L201-02S-00, MPCI-L201-01S, MPCI-L201-02S-00 the "IPV6" configuration is allowed only if the <MNO> parameter of AT+UMNOCONF command is set to Verizon or regulatory only.

☞ TOBY-L201-02S / MPCI-L201-02S
On TOBY-L201-02S-00, MPCI-L201-02S-00 the "IPV6" configuration is allowed only if the <MNO> parameter of AT+UMNOCONF command is set to Verizon or regulatory only.

☞ LISA-U200-00S / LISA-U200-01S / LISA-U200-02S / LISA-U200-52S / LISA-U200-62S / LISA-U230 / LISA-U260 / LISA-U270 / LISA-U1 / SARA-G300 / SARA-G310 / SARA-G340-00S / SARA-G340-01S / SARA-G350-00S / SARA-G350-00X / SARA-G350-01B / SARA-G350-01S / LEON-G1
The IPv6 stack for an external context is not supported: hence the "IPV6" value is not supported.

☞ TOBY-L200-00S / TOBY-L200-02S / MPCI-L200
The IPv6 stack for an external context is not supported: hence the "IPV6" value is not supported.

☞ TOBY-L200-03S
On TOBY-L200-03S-00 the IPv6 stack for an external context is not supported: hence the "IPV6" value is not supported.

- SARA-U201-63B / LISA-U200-62S only - "PPP": Point to Point Protocol

☞ TOBY-L210-62S
Only a single data PDP context (both internal and external) is allowed: the parameter can be set to "IPV4" only.

☞ TOBY-L4 / TOBY-L2 / MPCI-L2 / LARA-R2 / TOBY-R2 / SARA-U2 / LISA-U2 / LISA-U1 / SARA-G4 / SARA-G3 / LEON-G1
<PDP_type>="NONIP" is not supported.

18.2 PPP LCP handshake behaviour

☞ TOBY-L4
PPP is not supported.

When a data call is initiated by means of D* AT command, the module switches to PPP mode just after the CONNECT intermediate result code. The first step of the PPP procedure is the LCP handshake, in this phase the behaviour of 2G products differs from 3G products and 4G products.

☞ TOBY-L4 / TOBY-L2 / MPCI-L2 / LARA-R2 / TOBY-R2 / SARA-U2 / LISA-U2 / LISA-U1 / SARA-G4 / SARA-G3 / LEON-G1
The data call can be initiated also by the +CGDATA AT command setting "PPP" as <L2P> protocol).

☞ Entering OnLine Command Mode (OLCM) during LCP handshake phase is strongly discouraged because the handshake procedure could be broken and should be restarted from the beginning.

TOBY-L2 / MPCI-L2
The module starts sending the LCP configuration packets by its side (up to 10 retries every 1 s). If none valid LCP response packet is received from the TE, the module drops the PDP context and returns the NO CARRIER final result code.

LARA-R2 / TOBY-R2 / LISA-U270-62S / LISA-U270-63S / LISA-U270-68S
The module starts in PPP silent mode (wait the first LCP packet): if the TE does not starts the LCP handshake in between 1 s, the module starts sending the LCP configuration packets by its side (up to 10 retries every 6 s). If none valid LCP response packet is received from the TE, the module drops the PDP context and returns the NO CARRIER final result code.

SARA-U2 / LISA-U200 / LISA-U201 / LISA-U230 / LISA-U260 / LISA-U270-01S / LISA-U270-02S / LISA-U1
The module starts in PPP silent mode (wait the first LCP packet): if the TE does not starts the LCP handshake in between 1 s, the module starts sending the LCP configuration packets by its side (up to 10 retries every 1 s). If none valid LCP response packet is received from the TE, the module drops the PDP context and returns the NO CARRIER final result code.

SARA-G4 / SARA-G3 / LEON-G1
By default the module starts PPP in silent mode, waiting the first LCP packet coming from the TE. If a valid LCP packet is received the module continues the LCP handshake by its side, otherwise it remains in wait state. If the module is in wait state, it is possible to make it switch back to the AT command mode toggling the DTR line.

It is possible to disable the PPP silent mode by means of the +UDCONF=0 command. When the silent mode is disabled, the module will start sending the LCP configuration packets (up to 10 retries every 6 s) just after the CONNECT intermediate result code. If none valid LCP response packet is received from the TE, the module will act like in silent mode.

18.3 Printing IP address format +CGPIAF

+CGPIAF						
Modules	TOBY-L2 MPCI-L2					
	LARA-R2 TOBY-R2					
Attributes	**Syntax**	**PIN required**	**Settings saved**	**Can be aborted**	**Response time**	**Error reference**
	full	No	No	No	-	+CME Error

18.3.1 Description

Defines the printing format of IPv6 address parameters of the other AT commands. See RFC 4291 [94] for details of the IPv6 address format.

☞ TOBY-L2 / MPCI-L2 / LARA-R2 / TOBY-R2
The affected parameters are:

- In +CGTFT and +CGTFTRDP the <remote_address_and_subnet_mask> parameter
- In +CGDCONT the <PDP_addr> parameter
- In +CGPADDR the <PDP_addr_1> and <PDP_addr_2> parameters
- In +CGCONTRDP, the <local_address_and_subnet_mask>, <dns_prim_addr>, <dns_sec_addr>, <P_CSCF_prim_addr> and <P_CSCF_sec_addr> parameters
- In +CRC the <PDP_addr> parameter of URC GPRS <PDP_type>,<PDP_addr>[,<L2P>[,<APN>]]

18.3.2 Syntax

Type	Syntax	Response	Example
Set	AT+CGPIAF=[<IPv6_AddressFormat>[,<IPv6_SubnetNotation>[,<IPv6_LeadingZeros>[,<IPv6_CompressZeros>]]]]	OK	AT+CGPIAF=1,1,1,1 OK
Read	AT+CGPIAF?	+CGPIAF: <IPv6_AddressFormat>,<IPv6_SubnetNotation>,<IPv6_LeadingZeros>,<IPv6_CompressZeros> OK	+CGPIAF: 0,0,0,0 OK
Test	AT+CGPIAF=?	+CGPIAF: (list of supported <IPv6_AddressFormat>s),(list of supported <IPv6_SubnetNotation>s),(list of supported <IPv6_LeadingZeros>s),(list of supported <IPv6_CompressZeros>s) OK	+CGPIAF: (0-1),(0-1),(0-1),(0-1) OK

18.3.3 Defined values

Parameter	Type	Description
<IPv6_AddressFormat>	Number	Defines the IPv6 address format: • 0 (default value): IPv4-like dot-notation used. IP address and subnetwork mask if applicable, are dot-separated • 1: IPv6-like colon-notation used. IP address and subnetwork mask if applicable and when given explicitly, are separated by a space
<IPv6_SubnetNotation>	Number	Defines the subnet-notation for <remote_address_and_subnet_mask>. The setting does not apply if <IPv6_AddressFormat>=0: • 0 (default value): both IP address and subnet mask are explicitly stated, separated by a space • 1: the printout format is applying / (forward slash) subnet-prefix Classless Inter-Domain Routing (CIDR)
<IPv6_LeadingZeros>	Number	Defines whether leading zeros are omitted or not. The setting does not apply if <IPv6_AddressFormat>=0: • 0 (default value): leading zeros omitted • 1: leading zeros included
<IPv6_CompressZeros>	Number	Defines whether 1-n instances of 16-bit-zero-values are replaced by only "::". This applies only once. The setting does not apply if <IPv6_AddressFormat>=0: • 0 (default value): no zero compression • 1: use zero compression

18.4 PDP context definition +CGDCONT

+CGDCONT						
Modules	All products					
Attributes	**Syntax**	**PIN required**	**Settings saved**	**Can be aborted**	**Response time**	**Error reference**
	partial	Yes	NVM	No	-	+CME Error

18.4.1 Description

Defines the connection parameters for a PDP context, identified by the local context identification parameter <cid>. If the command is used only with parameter <cid>, the corresponding PDP context becomes undefined.

Each context is permanently stored so that its definition is persistent over power cycles.

The command is used to set up the PDP context parameters for an external context, i.e. a data connection using the external IP stack (e.g. Windows dial-up) and PPP link over the serial interface.

Usage of static i.e. user defined IP address is possible in UTRAN and GERAN but not in EUTRAN; to prevent inconsistent addressing methods across various RATs, static IP addressing is not recommended for LTE modules: 3GPP TS 23.060 [10] Rel.8 and later releases specify that a UE with EUTRAN/UTRAN/GERAN capabilities shall not include a static PDP address in PDP context activation requests.

☞ TOBY-L2 / MPCI-L2
Use the +UCGDFLT AT command to set the connection parameters of the initial default bearer.
Since dial-up supports only IPv4 connectivity, the defined IPv6 EPS bearers / PDP contexts will not be used.

☞ TOBY-L4 / TOBY-L2 / MPCI-L2
After the PDP context activation, the information text response to the read command provides the configuration negotiated with the network (similarly to +CGTFTRDP and +CGCONTRDP AT commands).

☞ TOBY-L4 / LARA-R2 / TOBY-R2
The read command shows PDP contexts/EPS bearers defined by IMS, BIP and OMA-DM internal clients but they cannot be defined, modified or undefined with the set command.
It is forbidden to define a PDP context having the same APN used by the IMS internal client, e.g. on TOBY-R2 and LARA-R202 / LARA-R203 / LARA-R211 the APN shall be different from "ims" or "IMS" and on LARA-R204 the APN shall be different from "VZWIMS" or "IMS".

☞ LARA-R204
In Verizon Configuration and when attached to Roaming PLMN the Class 3 APN will be defined with <PDP_type>=IPv4-only at <cid>=1, as per Verizon specifications. Such EPS attach bearer shall then be used for data connectivity. This is not valid on LARA-R204-02B-00, LARA-R204-02B-01.

18.4.2 Syntax

Type	Syntax	Response	Example
Set	AT+CGDCONT=[<cid>[,<PDP_type>[,<APN>[,<PDP_addr>[,<d_comp>[,<h_comp>[,<IPv4AddrAlloc>[,<emergency_indication>[,<P-CSCF_discovery>[,<IM_CN_Signalling_Flag_Ind>[,<NSLPI>]]]]]]]]]]	OK	**IPv4 example** AT+CGDCONT=1,"IP","APN_name","1.2.3.4",0,0 OK **IPv4v6 example** AT+CGDCONT=1,"IPV4V6","APN","0.0.0.0 0.0.0.0.0.0.0.0.0.0.0.0.0.0.0.0",0,0 OK **IPv6 example** AT+CGDCONT=1,"IPV6","APN","0.0.0.0.0.0.0.0.0.0.0.0.0.0.0.0",0,0 OK
Read	AT+CGDCONT?	+CGDCONT: <cid>,<PDP_type>,<APN>,<PDP_addr>,<d_comp>,<h_comp>[,<IPv4AddrAlloc>,<emergency_indication>,<P-CSCF_discovery>,<IM_CN_Signalling_Flag_Ind>[,<NSLPI>]] OK	+CGDCONT: 1,"IP","web.omnitel.it","91.80.140.199",0,0 OK
Test	AT+CGDCONT=?	+CGDCONT: (list of supported <cid>s),<PDP_type>,,,(list of supported <d_comp>s),(list of supported <h_comp>s)[,(list of supported <IPv4AllocAddr>s),(list of supported <emergency_indication>s),(list of supported <P-CSCF_discovery>s),(list of supported <IM_CN_Signalling_Flag_Ind>s)[,(list of supported <NSLPI>s)]] OK	+CGDCONT: (1-3),"IP",,,(0-2),(0-4) OK

18.4.3 Defined values

Parameter	Type	Description
<cid>	Number	See <cid>
<PDP_type>	String	See <PDP_type>
<APN>	String	See <APN>
<PDP_addr>	Number	See <PDP_addr>
<d_comp>	Number	PDP data compression; it can have the values: • 0 (default value): off • 1: on (predefined compression type i.e. V.42bis data compression) • 2: V.42bis data compression
<h_comp>	Number	PDP header compression; it can have the values: • 0 (default value): off • 1: on (predefined compression type, i.e. RFC1144) • 2: RFC1144 • 3: RFC2507 • 4: RFC3095 ☞ <h_comp>: the available head-compressions are dependent on configuration of the stack (configured via features in the stack)
<IPv4AddrAlloc>	Number	Controls how the MT/TA requests to get the IPv4 address information: • 0 (default value): IPv4 Address Allocation through NAS Signalling • 1: IPv4 Address Allocated through DHCP
<emergency_indication>	Number	Indicates whether the PDP context is for emergency bearer services or not: • 0 (default value): PDP context is not for emergency bearer services • 1: PDP context is for emergency bearer services
<P-CSCF_discovery>	Number	Influences how the MT/TA requests to get the P-CSCF address, see 3GPP TS 24.229 [103] annex B and annex L: • 0 (default value): preference of P-CSCF address discovery not influenced by +CGDCONT • 1: preference of P-CSCF address discovery through NAS Signalling • 2: preference of P-CSCF address discovery through DHCP
<IM_CN_Signalling_Flag_Ind>	Number	Shows whether the PDP context is for IM CN subsystem-related signalling only or not: • 0: PDP context is not for IM CN subsystem-related signalling only • 1: PDP context is for IM CN subsystem-related signalling only
<NSLPI>	Number	Indicates the NAS signalling priority requested for the corresponding PDP context: • 0 (default value): indicates that the PDP context has to be activated with the value for the low priority indicator configured in the MT. • 1: indicates that the PDP context has to be activated with the value for the low priority indicator set to "MS is not configured for NAS signalling low priority". The MT utilises the NSLPI information provided as specified in 3GPP TS 24.301 [88] and 3GPP TS 24.008 [12].

18.4.4 Notes

Additional examples:

Command	Response	Description
		Configure the error result code format by means of the +CMEE AT command
AT+CGDCONT=?	+CGDCONT: (1-3),"IP",,,(0),(0-1) OK	Test command
AT+CGDCONT=4,"IP","internet"	+CME ERROR: operation not allowed	Define out of range PDP contexts
AT+CGDCONT=2,"IP","internet"	OK	Define allowed PDP contexts
AT+CGDCONT=1,"IP","STATREAL"	OK	Define allowed PDP contexts
AT+CGDCONT=3,"IP","PAP: tim.ibox.it"	OK	Define allowed PDP contexts ☞ TOBY-L2 / MPCI-L2 This step is not applicable.
AT+CGDCONT=253,"IP","internet"	+CME ERROR: operation not allowed	Define out of range PDP contexts
AT+CGDCONT?	+CGDCONT: 2,"IP","internet","0.0.0.0",0,0	Read command

Command	Response	Description
	+CGDCONT: 1,"IP","STATREAL","0.0.0.0",0 ,0 +CGDCONT: 3,"IP","tim.ibox.it","0.0.0.0",0,0 OK	

TOBY-L2 / MPCI-L2

- The <NSLPI> parameter is not supported.
- The module automatically accepts the Mobile Terminated contexts/bearers.
- The <cid> of a mobile terminated context/bearer is assigned following the rules below:
  - Primary context (2G/3G) or default bearer (4G): first <cid> not defined in the ordered list = [4, 3, 2, 1, 8, 7, 6, 5].
  - Secondary context (2G/3G) or dedicated bearer (4G): first <cid> not defined in the ordered list = [8, 7, 6, 5, 1, 2, 3, 4].

TOBY-L4 / LARA-R2 / TOBY-R2

- When registering in LTE, the initial default EPS bearer is mapped to <cid>= 1.
- If not specified by the set command, the following values are assumed:
  - <cid>: 1
  - <PDP_addr>: "0.0.0.0"
- <d_comp>=1, 2 are not supported.
- The command setting are stored in the NVM at the module switch off.
- The module automatically accepts Mobile Terminated PDP contexts/EPS bearers.
- The <NSLPI> parameter is not supported.
- <P-CSCF_discovery>=2 is not supported.

TOBY-L4

- The <cid> parameter is mandatory for the AT+CGDCONT set command.
- The static IP address set with +CGDCONT is ignored in all RATs and overwritten with the IP address assigned by the network.

LARA-R2 / TOBY-R2

- The static IP address set with +CGDCONT, which is used in the Activate PDP Context Request message in 2G and 3G, in 4G is overwritten with the IP address assigned by network during the LTE attach or EPS default bearer activation.

TOBY-L4006 / LARA-R202 / LARA-R203 / LARA-R220 / LARA-R280 / TOBY-R2

- The factory-programmed settings of the initial default EPS bearer mapped to <cid>= 1 are:
  - <APN>= "nxtgenphone"
  - <PDP_type>= "IPV4V6"

LARA-R202 / LARA-R203 / LARA-R204 / LARA-R220 / LARA-R280 / TOBY-R202

- <h_comp>= 1, 2, 3 and 4 are not supported.

LARA-R204

- In VZW mode (see +UMNOCONF command), the settings of the initial default EPS bearer mapped to <cid>= 1 is automatically selected among the entries of the APN table (see +VZWAPNE read command) depending on the IMS service status (IMS test mode active or inactive, IMS registration successful or not).

SARA-U2 / LISA-U2 / LISA-U1

- If not specified the following values are assumed:
  - <cid>: 1
  - <PDP_addr>: "0.0.0.0"
- <IPv4AddrAlloc>, <emergency_indication>, <P-CSCF_discovery>, <IM_CN_Signalling_Flag_Ind> and <NSLPI> parameters are not supported.

LISA-U200-00S / LISA-U200-01S / LISA-U200-02S / LISA-U200-52S / LISA-U200-62S / LISA-U230 / LISA-U260 / LISA-U270

- If <APN> is not specified the value "apn" is assumed.

- To omit the APN, i.e. to use the so-called "blank APN" setting, leave undefined the PDP context associated to <cid>=1 and use it to dial-up a PPP connection.

SARA-G3 / LEON-G1

- If not specified the following values are assumed:
  - <cid>: 1
  - <APN>: "apn"
  - <PDP_addr>: "0.0.0.0"
- <d_comp>=1, 2 are not supported (<d_comp>=1 may be accepted, but no compression is performed).
- <h_comp>= 2, 3 and 4 are not supported.
- The context's setting is not permanently stored in NVM.
- It is possible to omit the APN by specifying the <cid> and the <PDP_type> only.
- <IPv4AddrAlloc>, <emergency_indication>, <P-CSCF_discovery>, <IM_CN_Signalling_Flag_Ind> and <NSLPI> parameters are not supported.

SARA-G4

- The <cid> parameter is mandatory.
- If not specified the following values are assumed:
  - <APN>: ""
  - <PDP_addr>: "0.0.0.0"
- <d_comp>=1, 2 are not supported (<d_comp>=1 may be accepted, but no compression is performed).
- <h_comp>= 2, 3 and 4 are not supported.
- It is possible to omit the APN by specifying the <cid> and the <PDP_type> only.
- <IPv4AddrAlloc>, <emergency_indication>, <P-CSCF_discovery>, <IM_CN_Signalling_Flag_Ind> and <NSLPI> parameters are not supported.

LEON-G1

- If only the parameter <cid> is set, the corresponding PDP context is not undefined.

18.5 Protocol configuration options configuration +UPCO

+UPCO						
Modules	TOBY-L4					
	LARA-R2 TOBY-R2					
Attributes	**Syntax**	**PIN required**	**Settings saved**	**Can be aborted**	**Response time**	**Error reference**
	full	No	No	No	-	+CME Error

18.5.1 Description

Manages the protocol configuration options (PCO) of PDP contexts/EPS bearers. It provides the following functionality:

- Configuration of the PCO sent to the network when a PDP context is activated;
- Retrieval of the PCO negotiated with the network, that can configure or modify them both in values and in types;
- Notification via URC of the availability of new PCO information from the network (due to network initiated PDP context modification for the <cid>). The modified PCO can be queried using the get option.

18.5.2 Syntax

Type	Syntax	Response	Example
Generic syntax			
Set	AT+UPCO=<op_code>,[.....]	[+UPCO:<cid>[,<Tag>,<Number_of_values>,<Value>[,<Value>]....[,<Tag>,<Number_of_values>,<Value>[,<Value>]....]]] OK	
Configure PCO information (to be sent to network)			
Set	AT+UPCO=1,<cid>[,[<protocol_conf_options>][,[<pcscfIPv6_addr_req>]	OK	

Type	Syntax	Response	Example
	[,[<ImCN>][,[<DnsIPv6Addr_req>] [,[<ms_nw_req_bearer_ctrl_ind>] [,[<dsm_ipv6_home_agent_addr_req>][,[<dsm_ipv6_home_nw_prefi_req>][,[<dsm_ipv6v4_home_agent_addr_req>][,[<ip_addr_alloc_nas_signalling>][,[<ipv4_addr_alloc_dhcpv4>][,[<pcscf_ipv4_addr_req>] [,[<dns_server_ipv4_addr_req>][, [<msisdn_req>][,[<ifom_support_req>][,<ipv4_mtu_req>]]]]]]]]]]]]]]		
Read PCO information (received from network)			
Read	AT+UPCO=2,<cid>	[+UPCO:<cid>[,<Tag>,<Number_of_values>,<Value>[,<Value>].... [,<Tag>,<Number_of_values>, <Value>[,<Value>]....]]] OK	AT+UPCO=2,1 +UPCO: 1,0,1,12,0,1,0,11,1,"" OK
Enable PCO modification URC (initiated from network)			
Set	AT+UPCO=3	OK	AT+UPCO=3 OK
Disable PCO modification URC (initiated from network)			
Set	AT+UPCO=4	OK	AT+UPCO=4 OK
Test	AT+UPCO=?	+UPCO: (list of supported <op_code>s) OK	+UPCO: (1-4) OK
URC		+UPCOI: <cid>	+UPCOI: 1

18.5.3 Defined values

Parameter	Type	Description
<op_code>	Number	Defines the command mode to configure the PCO properties: • 1: set the PCO properties for a specific <cid>; the PCO will be used in PDP context activation • 2: get the PCO properties for a specific <cid>, i.e. the PCO of a PDP context received from the NW in TNV (Tag Name Value) format • 3: enable +UPCOI indication • 4: disable +UPCOI indication
<cid>	Number	PDP context id for which the PCO properties are to be set or fetched
<protocol_conf_options>	String	String in hexadecimal format containing Configuration protocol options list's Container Information from MS to Network. The string is basically a hexadecimal representation from octet w+1 of Protocol configuration options IE (see 3GPP TS 24.008 [12] Protocol configuration options, Table 10.5.154 for more details) and up to the last byte of Configuration protocol options list. The first 3 bytes of the Protocol configuration options IE are added by the cellular protocols. The maximum length is 250 characters.
<pcscfIPv6_addr_req>	Number	Boolean indicating the P-CSCF IPv6 Address Request. This is as per P-CSCF Server Discovery. See 3GPP TS 29.061 [137] V8.7.0. s a boolean indicating MS support of Network Requested Bearer Control indicator. ☞ When this string is set with some data, the Boolean's in the +UPCO set command are neglected.
<ImCN>	Number	Boolean indicating IM CN Subsystem Signaling Flag, where the PDP context is to be used for IMS Signaling purpose. This is as per 3GPP 27.060 [17] Sec. 13.4.
<DnsIPv6Addr_req>	Number	Boolean indicating DNS Server IPv6 Address Request. This is as per DNS Server Discovery. See 3GPP TS 29.061 [137] V8.7.0.
<ms_nw_req_bearer_ctrl_ind>	Number	MS Support of Network Requested Bearer Control Indicator
<dsm_ipv6_home_agent_addr_req>	Number	Boolean indicating DSMIPv6 Home Agent Address Request. This is for obtaining the IPv6 address corresponding to a DSMIPv6 HA address (see 3GPP TS 24.303 [138] and 3GPP TS 24.327 [139]).

Parameter	Type	Description
<dsm_ipv6_home_nw_prefi_req>	Number	Boolean indicating DSMIPv6 Home Network Prefix Request. This is for obtaining the IPv6 Home Network Prefix (see 3GPP TS 24.303 [138] and 3GPP TS 24.327 [139]).
<dsm_ipv6v4_home_agent_addr_req>	Number	Boolean indicating DSMIPv6 IPv4 Home Agent Address Request. This is for obtaining the IPv4 address corresponding to a DSMIPv6 IPv4 Home Agent address (see 3GPP TS 24.303 [138] and 3GPP TS 24.327 [139]).
<ip_addr_alloc_nas_signalling>	Number	Boolean indicating IP address allocation via NAS signalling
<ipv4_addr_alloc_dhcpv4>	Number	Boolean indicating IPv4 address allocation via DHCPv4
<pcscf_ipv4_addr_req>	Number	Boolean indicating P-CSCF IPv4 Address Request. This is as per P-CSCF Server Discovery. See 3GPP TS 29.061 [137] V8.7.0.
<dns_server_ipv4_addr_req>	Number	Boolean indicating DNS Server IPv4 Address Request. This is as per DNS Server Discovery. See 3GPP TS 29.061 [137] V8.7.0.
<msisdn_req>	Number	Boolean indicating MSISDN Request. This is as per MSISDN notification procedure. See 3GPP 24.008 [12] Sec 6.4.
<ifom_support_req>	Number	Boolean indicating IFOM (IP Flow Mobility and Seamless Offload) support request
<ipv4_mtu_req>	Number	Boolean indicating IPv4 MTU (Maximum Transmission Unit) request
<Tag>	Number	• 0: <ImCN_Tag> indicates IM CN signaling. If present the <value> in the TNV has information about IM CN Subsytem signaling flag information. • 1: <PolCtrlRejCode> indicates DSMIPv6 IPv4 Home Agent Address Request. This is for obtaining the IPv4 address corresponding to a DSMIPv6 IPv4 Home Agent address (see 3GPP TS 24.303 [138] and 3GPP TS 24.327 [139]). • 2: <BearerControlMode_Tag> is the bearer control mode. • 3: <DSMIPv6Haar_Tag> is the DSMIPv6 Home agent address. • 4: <DSMIPv6v4Haar_Tag> is the DSMIPv6 IPv4 Home agent address. • 5: <DSMIPv6Hnpr_Tag> is the Home network prefix address. • 6: <DnsIpv4addr_Tag> is the DNS server IPv4 address. This will include primary and secondary DNS IPv4 addresses. <Value> field contains Primary IPv4 address as the first value parameter. Subsequent values if present (<Number_of_values> > 1) will contain the secondary IPv4 addresses. • 7: <DnsIPv6Addr_Tag> is the DNS address of the server(IPv6). This will include primary and secondary DNS IPv6 addresses. <Value> field contains Primary IPv6 address as the first value parameter. Subsequent values if present (<Number_of_values> > 1) will contain the secondary IPv6 addresses. • 8: <PcscfIPv4_addr_Tag> is the P-CSCF IPv4 address. This will include primary and secondary P-CSCF IPv4 addresses. <Value> field contains Primary IPv4 address as the first value parameter. Subsequent values if present (<Number_of_values> > 1) will contain the secondary IPv4 addresses. • 9: <PcscfIPv6_addr_Tag> is the P-CSCF IPV6 address. This will include primary and secondary P-CSCF IPv6 addresses. <Value> field contains Primary IPv6 address as the first value parameter. Subsequent values if present (<Number_of_values> > 1) will contain the secondary IPv6 addresses. • 10: <MSISDN_Tag> is the MSISDN info. • 11: <pco_container_Tag> is a hexadecimal string representation of the Network Operator Specific Container Information containing only information related to container ID FF00H to FFFFH provided by the Network to the MS. See the 3GPP 24.008 v9 [12] section 10.5.6.3 (Table 10.5.154,Network to MS direction) • 12: <ifom_support_flag_Tag> represents the IP Flow Mobility and Seamless offloading support flag. • 13: <ipv4_mtu_info_Tag> represents the IPv4 MTU content. ☞ IPv6 address obtained on LTE will be prefixed with a constant 8 byte address "FE.80.00.00.00.00.00.00" if network has not provided.
<Number_of_values>	String	In the TNV, it indicates how many <Value> parameters corresponding to <Tag> are present. The parameters will be comma-separated.

18.6 IPv6 configuration +UDCONF=66

+UDCONF=66						
Modules	TOBY-L2 MPCI-L2					
	SARA-U2 LISA-U200-03S LISA-U200-83S LISA-U201					
Attributes	**Syntax**	**PIN required**	**Settings saved**	**Can be aborted**	**Response time**	**Error reference**
	full	No	NVM	No	-	+CME Error

18.6.1 Description

Configures IPv6 support.

☞ If IPv6 is not supported, also IPv4v6 is not supported.

☞ The configuration will be effective at the next power on.

18.6.2 Syntax

Type	Syntax	Response	Example
Set	AT+UDCONF=66,<IPv6_conf>	OK	AT+UDCONF=66,1 OK
Read	AT+UDCONF=66	+UDCONF: 66,<IPv6_conf> OK	AT+UDCONF=66 +UDCONF: 66,0 OK

18.6.3 Defined values

Parameter	Type	Description
<IPv6_conf>	Number	IPv6 support enable / disable: • 0: IPv6 support disabled • 1 (factory-programmed value): IPv6 support enabled; IPv6 stateless address autoconfiguration is available only for LTE (the Router Solicitation is transmitted at EPS bearer activation) • 2: IPv6 support enabled; IPv6 stateless address autoconfiguration is available for every RAT (the Router Solicitation is transmitted at PDP context/EPS bearer activation)

18.6.4 Notes

SARA-U2 / LISA-U2

- The factory-programmed value of <IPv6_conf> parameter is 0.

TOBY-L200-00S / TOBY-L200-02S / TOBY-L210-60S / TOBY-L210-62S / MPCI-L200 / MPCI-L210-60S

- The factory-programmed value of <IPv6_conf> parameter is 0.

TOBY-L200-03S

- On TOBY-L200-03S-00 the factory-programmed value of <IPv6_conf> parameter is 0.

TOBY-L201-01S / MPCI-L201-01S

- The factory-programmed value of <IPv6_conf> parameter is 0 in AT&T AT+UMNOCONF configuration, 1 in Verizon.

TOBY-L201-02S / MPCI-L201-02S

- On TOBY-L201-02S-00, MPCI-L201-02S-00 the factory-programmed value of <IPv6_conf> parameter is 0 in AT&T AT+UMNOCONF configuration, 1 in Verizon.

TOBY-L210-62S

- If <IPv6_conf>=0 the IPv6 only is disabled while the IPv4v6 protocol remains enabled.

TOBY-L200-00S / TOBY-L200-02S / TOBY-L201 / TOBY-L210-00S / TOBY-L210-02S / TOBY-L210-60S / TOBY-L210-62S / TOBY-L220 / TOBY-L280-02S / MPCI-L2 / SARA-U2 / LISA-U2

- <IPv6_conf>=2 is not supported.

TOBY-L200-03S / TOBY-L210-03S / TOBY-L280-03S

- <IPv6_conf>=2 is not supported by TOBY-L200-03S-00, TOBY-L210-03S-00, TOBY-L280-03S-00.

18.7 Packet switched data configuration +UPSD

+UPSD						
Modules	TOBY-L200-02S TOBY-L200-03A TOBY-L200-03S TOBY-L201 TOBY-L210-02S TOBY-L210-03A TOBY-L210-03S TOBY-L210-62S TOBY-L220 TOBY-L280 MPCI-L200-02S MPCI-L200-03S MPCI-L201 MPCI-L210-02S MPCI-L210-03S MPCI-L220 MPCI-L280					
	LARA-R2 TOBY-R2					
	SARA-U2 LISA-U2 LISA-U1					
	SARA-G4 SARA-G340 SARA-G350 SARA-G350-53S LEON-G1					
Attributes	**Syntax**	**PIN required**	**Settings saved**	**Can be aborted**	**Response time**	**Error reference**
	partial	No	NVM	No	-	+CME Error

18.7.1 Description

Sets or reads all the parameters in a specific packet switched data (PSD) profile. The command is used to set up the PDP context parameters for an internal context, i.e. a data connection using the internal IP stack and related AT commands for sockets.

To set all the parameters of the PSD profile a set command for each parameter needs to be issued.

☞ TOBY-L2 / MPCI-L2 / LARA-R2 / TOBY-R2 / SARA-U2 / LISA-U2 / LISA-U1 / SARA-G4 / SARA-G3 / LEON-G1
The parameter values set with this command are volatile, but the whole profile can be stored in NVM with AT+UPSDA command.

☞ In the read command, if only the first parameter is issued, the module returns all the parameters of the given PSD profile, and lists them in separated lines.

☞ TOBY-L2 / MPCI-L2 / LARA-R2 / TOBY-R2
The PSD profile configured through the +UPSD AT command is mapped to a <cid> context identifier in the +CGDCONT table (<cid> 8 by default). The mapping between the +UPSD profile and the corresponding <cid> can be configured through <param_tag> = 100. See Notes for more details.

18.7.2 Syntax

Type	Syntax	Response	Example
Set	AT+UPSD=<profile_id>,<param_tag>,<param_val>	OK	AT+UPSD=0,1,"apn.provider.com" OK
Read	AT+UPSD=<profile_id>,<param_tag>	+UPSD: <profile_id>,<param_tag>,<param_val> OK	AT+UPSD=0,1 +UPSD: 0,1,"apn.provider.com" OK
	AT+UPSD=<profile_id>	+UPSD: <profile_id>,0,<param_val0> +UPSD: <profile_id>,1,<param_val1>... +UPSD: <profile_id>,x,<param_valx> OK	AT+UPSD=0 +UPSD: 0,0,0 +UPSD: 0,1,"apn.provider.com" +UPSD: 0,2,"username" +UPSD: 0,4,"0.0.0.0" ... +UPSD: 0,19,0 OK

18.7.3 Defined values

Parameter	Type	Description
<profile_id>	Number	PSD profile identifier, in range 0-6
<param_tag>	Number	• 0: Protocol type; the allowed values of <param_val> parameter are o 0 (factory-programmed value): IPv4 o 1: IPv6

Parameter	Type	Description
		o 2: IPv4v6 with IPv4 preferred for internal sockets o 3: IPv4v6 with IPv6 preferred for internal sockets • 1: APN - <param_val> defines the APN text string, e.g. "apn.provider.com"; the maximum length is 99. The factory-programmed value is an empty string. • 2: username - <param_val> is the user name text string for the authentication phase. The factory-programmed value is an empty string. • 3: password - <param_val> is the password text string for the authentication phase. Note: the AT+UPSD read command with param_tag = 3 is not allowed and the read all command does not display it • 4: DNS1 - <param_val> is the text string of the primary DNS address. IPv4 DNS addresses are specified in dotted decimal notation form (i.e. four numbers in range 0-255 separated by periods, e.g. "xxx.yyy.zzz.www"). IPv6 DNS addresses are specified in standard IPv6 notation form (2001:DB8:: address compression is allowed). The factory-programmed value is "0.0.0.0". • 5: DNS2 - <param_val> is the text string of the secondary DNS address. IPv4 DNS addresses are specified in dotted decimal notation form (i.e. four numbers in range 0-255 separated by periods, e.g. "xxx.yyy.zzz.www"). IPv6 DNS addresses are specified in standard IPv6 notation form (2001:DB8:: address compression is allowed). The factory-programmed value is "0.0.0.0". • 6: authentication - the <param_val> parameter selects the authentication type: o 0 (factory-programmed value): none o 1: PAP o 2: CHAP o 3: automatic selection of authentication type (none/CHAP/PAP) • 7: IP address - <param_val> is the text string of the static IP address given by the ISP in dotted decimal notation form (i.e. four numbers in range 0-255 separated by periods, e.g. "xxx.yyy.zzz.www"). The factory-programmed value is "0.0.0.0". Note: IP address set as "0.0.0.0" means dynamic IP address assigned during PDP context activation • 8: data compression - the <param_val> parameter refers to the default parameter named d_comp and selects the data compression type: o 0 (factory-programmed value): off o 1: predefined, i.e. V.42bis o 2: V.42bis • 9: header compression - the <param_val> parameter refers to the default parameter named h_comp and selects the header compression type: o 0 (factory-programmed value): off o 1: predefined, i.e. RFC1144 o 2: RFC1144 o 3: RFC2507 o 4: RFC3095 • 10: QoS precedence - the <param_val> parameter selects the precedence class: o 0 (factory-programmed value): subscribed o 1: high o 2: normal o 3: low • 11: QoS delay - the <param_val> parameter selects the delay class: o 0 (factory-programmed value): subscribed o 1: class 1 o 2: class 2 o 3: class 3 o 4: best effort • 12: QoS reliability - the <param_val> parameter selects the reliability class: o 0 (factory-programmed value): subscribed o 1: class 1 (Interpreted as class 2) o 2: class 2 (GTP Unack, LLC Ack and Protected, RLC Ack) o 3: class 3 (GTP Unack, LLC Unack and Protected, RLC Ack) o 4: class 4 (GTP Unack, LLC Unack and Protected, RLC Unack) o 5: class 5 (GTP Unack, LLC Unack and Unprotected, RLC Unack) o 6: class 6 (Interpreted as class 3)

Parameter	Type	Description
		• 13: QoS peak rate - the <param_val> parameter selects the peak throughput in range 0-9. The factory-programmed value is 0. • 14: QoS mean rate - the <param_val> parameter selects the mean throughput in range 0-18, 31. The factory-programmed value is 0. • 15: minimum QoS precedence - the <param_val> parameter selects the acceptable value for the precedence class: o 0 (factory-programmed value): subscribed o 1: high o 2: normal o 3: low • 16: minimum QoS delay - the <param_val> parameter selects the acceptable value for the delay class: o 0 (factory-programmed value): subscribed o 1: class 1 o 2: class 2 o 3: class 3 o 4: best effort • 17: minimum QoS reliability - the <param_val> parameter selects the minimum acceptable value for the reliability class: o 0 (factory-programmed value): subscribed o 1: class 1 (Interpreted as class 2) o 2: class 2 (GTP Unack, LLC Ack and Protected, RLC Ack) o 3: class 3 (GTP Unack, LLC Unack and Protected, RLC Ack) o 4: class 4 (GTP Unack, LLC Unack and Protected, RLC Unack) o 5: class 5 (GTP Unack, LLC Unack and Unprotected, RLC Unack) o 6: class 6 (Interpreted as class 3) • 18: minimum QoS peak rate - the <param_val> parameter selects the acceptable value for the peak throughput in range 0-9. The factory-programmed value is 0. • 19: minimum QoS mean rate - the <param_val> parameter selects the acceptable value for the mean throughput in range 0-18, 31. The factory-programmed value is 0. • 20: 3G QoS delivery order - the <param_val> parameter selects the acceptable value for the delivery order: o 0 (factory-programmed value): subscribed o 1: enable o 2: disable • 21: 3G QoS erroneous SDU delivery - the <param_val> parameter selects the acceptable value for the erroneous SDU delivery: o 0 (factory-programmed value): subscribed o 1: no detection o 2: enable o 3: disable • 22: 3G QoS extended guaranteed downlink bit rate - <param_val> is the value for the extended guaranteed downlink bit rate in kb/s. The factory-programmed value is 0. • 23: 3G QoS extended maximum downlink bit rate - <param_val> is the value for the extended maximum downlink bit rate in kb/s. The factory-programmed value is 0. • 24: 3G QoS guaranteed downlink bit rate - <param_val> is the value for the guaranteed downlink bit rate in kb/s. The factory-programmed value is 0. • 25: 3G QoS guaranteed uplink bit rate - <param_val> is the value for the guaranteed uplink bit rate in kb/s. The factory-programmed value is 0. • 26: 3G QoS maximum downlink bit rate - <param_val> is the value for the maximum downlink bit rate in kb/s. The factory-programmed value is 0. • 27: 3G QoS maximum uplink bit rate - <param_val> is the value for the maximum uplink bit rate in kb/s. The factory-programmed value is 0. • 28: 3G QoS maximum SDU size - <param_val> is the value for the maximum SDU size in octets. The factory-programmed value is 0. • 29: 3G QoS residual bit error rate - <param_val> selects the acceptable value for the residual bit error rate: o 0 (factory-programmed value): subscribed o 1: 5E2 o 2: 1E2

Parameter	Type	Description
		o 3: 5E3 o 4: 4E3 o 5: 1E3 o 6: 1E4 o 7: 1E5 o 8: 1E6 o 9: 6E8 • 30: 3G QoS SDU error ratio - <param_val> selects the acceptable value for the SDU error ratio: o 0 (factory-programmed value): subscribed o 1: 1E2 o 2: 7E3 o 3: 1E3 o 4: 1E4 o 5: 1E5 o 6: 1E6 o 7: 1E1 • 31: 3G QoS signalling indicator - <param_val> selects the acceptable value for the signalling indicator: o 0 (factory-programmed value): subscribed o 1: signalling indicator 1 • 32: 3G QoS source statistics descriptor - <param_val> selects the acceptable value for the source statistics descriptor: o 0 (factory-programmed value): subscribed o 1: source statistics descriptor 1 • 33: 3G QoS traffic class - <param_val> selects the acceptable value for the traffic class: o 0 (factory-programmed value): subscribed o 1: conversational o 2: streaming o 3: interactive o 4: background • 34: 3G QoS traffic priority - <param_val> selects the acceptable value for the traffic priority: o 0 (factory-programmed value): subscribed o 1: priority 1 o 2: priority 2 o 3: priority 3 • 35: 3G QoS transfer delay - <param_val> is the value for the transfer delay in milliseconds. The factory-programmed value is 0. • 36: 3G minimum QoS delivery order - <param_val> selects the acceptable value for the delivery order: o 0 (factory-programmed value): subscribed o 1: enable o 2: disable • 37: 3G minimum QoS erroneous SDU delivery - <param_val> selects the acceptable value for the erroneous SDU delivery: o 0 (factory-programmed value): subscribed o 1: no detection o 2: enable o 3: disable • 38: 3G minimum QoS extended guaranteed downlink bit rate - <param_val> is the value for the extended guaranteed downlink bit rate in kb/s. The factory-programmed value is 0. • 39: 3G minimum QoS extended maximum downlink bit rate - <param_val> is the value for the extended maximum downlink bit rate in kb/s. The factory-programmed value is 0. • 40: 3G minimum QoS guaranteed downlink bit rate - <param_val> is the value for the guaranteed downlink bit rate in kb/s. The factory-programmed value is 0.

Parameter	Type	Description
		• 41: 3G minimum QoS guaranteed uplink bit rate - <param_val> is the value for the guaranteed uplink bit rate in kb/s. The factory-programmed value is 0. • 42: 3G minimum QoS maximum downlink bit rate - <param_val> is the value for the maximum downlink bit rate in kb/s. The factory-programmed value is 0. • 43: 3G minimum QoS maximum uplink bit rate - <param_val> is the value for the maximum uplink bit rate in kb/s. The factory-programmed value is 0. • 44: 3G minimum QoS maximum SDU size - <param_val> is the value for the maximum SDU size in octets. The factory-programmed value is 0. • 45: 3G minimum QoS residual bit error rate - <param_val> selects the acceptable value for the residual bit error rate: o 0 (factory-programmed value): subscribed o 1: 5E2 o 2: 1E2 o 3: 5E3 o 4: 4E3 o 5: 1E3 o 6: 1E4 o 7: 1E5 o 8: 1E6 o 9: 6E8 • 46: 3G minimum QoS SDU error ratio - <param_val> selects the acceptable value for the SDU error ratio: o 0 (factory-programmed value): subscribed o 1: 1E2 o 2: 7E3 o 3: 1E3 o 4: 1E4 o 5: 1E5 o 6: 1E6 o 7: 1E1 • 47: 3G minimum QoS signalling indicator - <param_val> selects the acceptable value for the signalling indicator: o 0 (factory-programmed value): subscribed o 1: signalling indicator 1 • 48: 3G minimum QoS source statistics descriptor - <param_val> selects the acceptable value for the source statistics descriptor: o 0 (factory-programmed value): subscribed o 1: source statistics descriptor 1 • 49: 3G minimum QoS traffic class - <param_val> selects the acceptable value for the traffic class: o 0 (factory-programmed value): subscribed o 1: conversational o 2: streaming o 3: interactive o 4: background • 50: 3G minimum QoS traffic priority - <param_val> selects the acceptable value for the traffic priority: o 0 (factory-programmed value): subscribed o 1: priority 1 o 2: priority 2 o 3: priority 3 • 51: 3G Minimum QoS transfer delay - <param_val> is the value for the transfer delay in milliseconds. The factory-programmed value is 0. • 100: map the +UPSD profile to the specified <cid> in the +CGDCONT table. o 1: map the current profile to <cid> 1 o 2: map the current profile to <cid> 2 o 3: map the current profile to <cid> 3 o 4: map the current profile to <cid> 4 o 5: map the current profile to <cid> 5

Parameter	Type	Description
		o 6: map the current profile to <cid> 6 o 7: map the current profile to <cid> 7 o 8 (factory-programmed value): map the current profile to <cid> 8

18.7.4 Notes

- For the description of the QoS parameters, see 3GPP TS 22.060 [50] and 3GPP TS 23.060 [10].
- The maximum length of <param_val> if <param_tag> is equal to 2 or 3 is 64.

TOBY-L2 / MPCI-L2

- The supported <param_tag>s are:
  - 0: IP type
  - 1: APN
  - 100: profile to <cid> mapping
- The authentication parameters can be configured by means of the +UAUTHREQ AT command. All the other advanced parameters (e.g. QoS) can be configured using the standard 3GPP AT commands. In both cases the <cid> to be used shall be the one mapped to the +UPSD profile (through <param_tag> = 100).
- If the default <cid> mapping needs to be changed, modify it prior to any other configuration.

LARA-R2 / TOBY-R2

- Set the APN by means of +UPSD AT command before to use <param_tag>=100.
- The authentication parameters can be configured by means of the +UAUTHREQ AT command. All the other advanced parameters (e.g. QoS) can be configured using the standard 3GPP AT commands. In both cases the <cid> to be used shall be the one mapped to the +UPSD profile (through <param_tag> = 100).
- The supported <param_tag>s are:
  - 0: IP type
  - 1: APN
  - 4: DNS1
  - 5: DNS2
  - 100: profile to <cid> mapping

LARA-R203 / LARA-R204 / LARA-R211 / TOBY-R2

- LARA-R203-02B-00, LARA-R203-02B-01, LARA-R204-02B-00, LARA-R204-02B-01, LARA-R211-02B-00, TOBY-R200-02B-00, TOBY-R200-02B-01, TOBY-R200-02B-02, TOBY-R202-02B-00, TOBY-R202-02B-01, TOBY-R202-02B-02 do not support <param_tag>=4, 5.

SARA-U2 / LISA-U2 / LISA-U1

- Only the IPv4 protocol type for an internal context is supported; hence if <param_tag> = 0 (IP type), <param_val>= 1 (IPv6), 2 (IPv4v6 with IPv4 preferred) and 3 (IPv4v6 with IPv6 preferred) are not supported.
- The <param_tag> = 100 (profile to <cid> mapping) is not supported.
- If <param_tag>=4 or 5, IPv6 DNS address is not supported.

SARA-U260-00S / SARA-U270-00S / SARA-U270-00X / SARA-U280-00S / LISA-U200-00S / LISA-U200-01S / LISA-U200-02S / LISA-U200-52S / LISA-U200-62S / LISA-U230 / LISA-U260 / LISA-U270

- If <param_tag>=6, <param_val>=3 (automatic selection of authentication type) is not supported.

LISA-U1

- If <param_tag>=6, <param_val> can only assume the value 2 (CHAP).
- If <param_tag>=6, <param_val>=3 (automatic selection of authentication type) is not supported.

SARA-G340 / SARA-G350 / LEON-G1

- For <param_tag> = 0 (IP type), values 1 (IPv6), 2 (IPv4v6 with IPv4 preferred) and 3 (IPv4v6 with IPv6 preferred) are not supported.
- The maximum length of <param_val> is 30 if <param_tag> is equal to 2 or 3.
- If <param_tag>=4 or 5, IPv6 DNS address is not supported.
- If <param_tag>=6, <param_val>=3 (automatic selection of authentication type) is not supported.
- If <param_tag>=8, <param_val>=2 is not supported.
- If <param_tag>=9, <param_val>=2, 3 and 4 are not supported.

- If <param_tag>=12 (or 17) and <param_val>=1 means GTP Ack, LLC Ack and Protected, RLC Ack.
- If <param_tag>=12 (or 17) <param_val>=6 is not supported.
- The values of <param_tag> greater than 19 are not supported.
- The <param_tag> = 100 (profile to <cid> mapping) is not supported.

SARA-G4

- For <param_tag> = 0 (IP type), value 3 (IPv4v6 with IPv6 preferred) is not supported.
- The maximum length of <param_val> is 30 if <param_tag> is equal to 2 or 3.
- If <param_tag>=4 or 5, IPv6 DNS address is not supported.
- If <param_tag>=6, <param_val>=3 (automatic selection of authentication type) is not supported.
- If <param_tag>=8, <param_val>=2 is not supported.
- If <param_tag>=9, <param_val>=2, 3 and 4 are not supported.
- If <param_tag>=12 (or 17) and <param_val>=1 means GTP Ack, LLC Ack and Protected, RLC Ack.
- If <param_tag>=12 (or 17) <param_val>=6 is not supported.
- The values of <param_tag> greater than 19 are not supported.
- The <param_tag> = 100 (profile to <cid> mapping) is not supported.

18.8 Packet switched data action +UPSDA

+UPSDA						
Modules	TOBY-L200-02S TOBY-L200-03A TOBY-L200-03S TOBY-L201 TOBY-L210-02S TOBY-L210-03A TOBY-L210-03S TOBY-L210-62S TOBY-L220 TOBY-L280 MPCI-L200-02S MPCI-L200-03S MPCI-L201 MPCI-L210-02S MPCI-L210-03S MPCI-L220 MPCI-L280					
	LARA-R2 TOBY-R2					
	SARA-U2 LISA-U2 LISA-U1					
	SARA-G4 SARA-G340 SARA-G350 SARA-G350-53S LEON-G1					
Attributes	**Syntax**	**PIN required**	**Settings saved**	**Can be aborted**	**Response time**	**Error reference**
	partial	No	No	Yes	Up to 3 min	+CME Error

18.8.1 Description

Performs the requested action for the specified PSD profile.

The command can be aborted. When a PDP context activation (<action> = 3) or a PDP context deactivation (<action> = 4) is aborted, the +UUPSDA URC is provided. The <result> parameter indicates the operation result. Until this operation is not completed, another set command cannot be issued.

The +UUPSDD URC is raised when the data connection related to the provided PSD profile is deactivated either explicitly by the network (e.g. due to prolonged idle time) or locally by the module after a failed PS registration procedure (e.g. due to roaming) or a user required detach (e.g. triggered by AT+COPS=2).

☞ TOBY-L2 / MPCI-L2 / LARA-R2 / TOBY-R2
The PSD profile configured through the +UPSD AT command is mapped to a <cid> in the +CGDCONT table (<cid> 8 by default).
If the <cid> has been already activated through the +CGACT command (or if the context is enabled by default in LTE network), it is not mandatory to trigger the +UPSDA activation command (this action is still suggested).
If the activation command is triggered for an already active data context, no new activation will be performed.
It is strongly discouraged a mixed use of +UPSDA and +CGACT commands for the internal profile activation.

☞ TOBY-L2 / MPCI-L2
The command cannot be aborted.

☞ TOBY-L2 / MPCI-L2 / LARA-R2 / TOBY-R2
The +UUPSDA URC is always raised when the PSD profile is activated.

☞ TOBY-L2 / MPCI-L2 / LARA-R2 / TOBY-R2
When a <profile_id> is mapped to and already active <cid>, the activation command (<action> = 3) may fail due to the following situations:

1. The APN configured with +UPSD does not match the the mapped <cid>'s APN (see +CGDCONT AT command). When this error is detected, the final result code will be "+CME ERROR: 4000" if CMEE=1 or "+CME ERROR: APN configuration mismatch" if +CMEE=2
2. The protocol type specified with the +UPSD AT command does not match with the PDP type of the mapped <cid> configured through the +CGDCONT AT command. To avoid this error, apply these mapping rules:
   - +UPSD protocol type 0 maps to +CGDCONT PDP type "IP"
   - +UPSD protocol type 1 maps to +CGDCONT PDP type "IPV6"
   - +UPSD protocol types 2 and 3 map to +CGDCONT PDP type "IPV4V6"

   When this error is detected, the final result code will be "+CME ERROR: 4001" if +CMEE=1 or "+CME ERROR: IP type configuration mismatch" if +CMEE=2

18.8.2 Syntax

Type	Syntax	Response	Example
Set	AT+UPSDA=<profile_id>,<action>	OK	AT+UPSDA=2,1 OK
URC		+UUPSDD: <profile_id>	
URC		+UUPSDA: <result>[,<ip_addr>]	

18.8.3 Defined values

Parameter	Type	Description
<profile_id>	Number	PSD profile identifier, in range 0-6
<action>	Number	• 0: reset; it clears the specified profile resetting all the parameters to their factory-programmed values • 1: store; it saves all the parameters in NVM • 2: load: it reads all the parameters from NVM • 3: activate; it activates a PDP context with the specified profile, using the current parameters • 4: deactivate; it deactivates the PDP context associated with the specified profile
<result>	Number	• 0: action successful • Different values mean an unsuccessful action (the codes are listed in the Appendix A.1)
<ip_addr>	String	The IP address assigned to the activated PDP context.

18.8.4 Notes

- Only one profile can be activated at the same time. The PDP context activation on more than one profile at the same time is not supported.
- The number of PDP contexts defined with AT+CGDCONT plus the number of contexts activated with +UPSDA cannot exceed three. Any further request to define a context with AT+CGDCONT or to activate a context with +UPSDA generates an error result code.
- In case of remote deactivation of the PDP context associated with a PSD profile, the URC is sent to the TE to inform the user, otherwise the user should deactivate the PDP context after the usage.
- In case of PDP deactivation (triggered by either network or the user) all the sockets that have been created will automatically be closed.

SARA-U2 / LISA-U2 / LISA-U1 / SARA-G3 / LEON-G1

- If the activation command is triggered for an already active data context, no new activation will be performed and the new activation command returns an error result code. If the deactivation command is triggered for a not active data context, the deactivation command returns an error result code.
- The command shall not be aborted before the expected maximum response time of 180 s or before the +UUPSDA URC (if supported) has been received. If aborted, the requested procedure (e.g. the PS data call activation or deactivation) will not be stopped, hence it will not be possible for the application processor to clearly understand when it is finished. The information about the active PDP context may also be polled by means of the +UPSND AT command, where supported.
- The <ip_addr> parameter in +UUPSDA URC is not present.

SARA-U2 / LISA-U2 / LISA-U1

- If the <action>= 3 (activate) the <cid> of the PDP context is set to 31 or a subsequent number if a BIP session is ongoing.

LISA-U200-00S / LISA-U200-01S / LISA-U230 / LISA-U260-01S / LISA-U270-01S / LISA-U1

- The command cannot be aborted.
- The +UUPSDA URC is not supported.

SARA-G340 / SARA-G350 / LEON-G1

- If the <action>= 3 (activate) the <cid> of the PDP context is set to 4.

LEON-G100-06S

- The command cannot be aborted.
- The +UUPSDA URC is not supported.
- In case of PDP deactivation (triggered by either network or the user), it is up to the user or the application to close all the sockets that have been created and are still open.

18.9 Packet switched network-assigned data +UPSND

+UPSND						
Modules	TOBY-L200-02S TOBY-L200-03A TOBY-L200-03S TOBY-L201 TOBY-L210-02S TOBY-L210-03A TOBY-L210-03S TOBY-L210-62S TOBY-L220 TOBY-L280 MPCI-L200-02S MPCI-L200-03S MPCI-L201 MPCI-L210-02S MPCI-L210-03S MPCI-L220 MPCI-L280					
	LARA-R2 TOBY-R2					
	SARA-U2 LISA-U2 LISA-U1					
	SARA-G4 SARA-G340 SARA-G350 SARA-G350-53S LEON-G1					
Attributes	**Syntax**	**PIN required**	**Settings saved**	**Can be aborted**	**Response time**	**Error reference**
	partial	No	No	No	-	+CME Error

18.9.1 Description

Returns the current (dynamic) network-assigned or network-negotiated value of the specified parameter for the active PDP context associated with the specified PSD profile.

18.9.2 Syntax

Type	Syntax	Response	Example
Set	AT+UPSND=<profile_id>,<param_tag>	+UPSND: <profile_id>,<param_tag>,<dynamic_param_val> OK	AT+UPSND=2,0 +UPSND: 2,0,"151.9.78.170" OK

18.9.3 Defined values

Parameter	Type	Description
<profile_id>	Number	PSD profile identifier, in range 0-6
<param_tag>	Number	Index representing a network-assigned or network-negotiated parameter: • 0: IP address: dynamic IP address assigned during PDP context activation; • 1: DNS1: dynamic primary DNS address; • 2: DNS2: dynamic secondary DNS address; • 3: QoS precedence: network assigned precedence class of the QoS; • 4: QoS delay: network assigned delay class of the QoS; • 5: QoS reliability: network assigned reliability class of the QoS; • 6: QoS peak rate: network assigned peak rate value of the QoS; • 7: QoS mean rate: network assigned mean rate value of the QoS • 8: PSD profile status: if the profile is active the return value is 1, 0 otherwise • 9: 3G QoS delivery order • 10: 3G QoS erroneous SDU delivery • 11: 3G QoS extended guaranteed downlink bit rate • 12: 3G QoS extended maximum downlink bit rate • 13: 3G QoS guaranteed downlink bit rate

Parameter	Type	Description
		• 14: 3G QoS guaranteed uplink bit rate • 15: 3G QoS maximum downlink bit rate • 16: 3G QoS maximum uplink bit rate • 17: 3G QoS maximum SDU size • 18: 3G QoS residual bit error rate • 19: 3G QoS SDU error ratio • 20: 3G QoS signalling indicator • 21: 3G QoS source statistics descriptor • 22: 3G QoS traffic class • 23: 3G QoS traffic priority • 24: 3G QoS transfer delay
<dynamic_param_val>	String	Network-assigned or network-negotiated value of the parameter specified in <param_tag>

18.9.4 Notes

TOBY-L2 / MPCI-L2 / LARA-R2 / TOBY-R2

- The supported <param_tag>s are:
  - 0: IP address query
  - 8: PSD profile status

SARA-G4 / SARA-G340 / SARA-G350 / LEON-G1

- The values of <param_tag> greater than 8 are not supported.

18.10 Read PDP context DNS information +UDCONF=11

+UDCONF=11						
Modules	SARA-U201 SARA-U270-04B					
Attributes	**Syntax**	**PIN required**	**Settings saved**	**Can be aborted**	**Response time**	**Error reference**
	full	No	No	No	-	+CME Error

18.10.1 Description

Returns the DNS server IP addresses (the secondary one will be provided only if assigned by the network) for all active PDP contexts.

☞ In case the <PDP_type>="IPV4V6", for each <cid> two rows will be printed: the first one will contain the IPv4 DNS addresses, the second one the IPv6 DNS addresses.

18.10.2 Syntax

Type	Syntax	Response	Example
Read	AT+UDCONF=11	[+UDCONF: 11,<cid>,<DNS_prim_addr>[,<DNS_sec_addr>] [+UDCONF: 11,<cid>,<DNS_prim_addr>[,<DNS_sec_addr>] [...]]] OK	AT+UDCONF=11 +UDCONF: 11,1,"192.168.209.199", "192.168.209.200" +UDCONF: 11,2,"192.168.209.199", "192.168.209.200" OK

18.10.3 Defined values

Parameter	Type	Description
<cid>	Number	See <cid>
<DNS_prim_addr>	String	IP address of the primary DNS server
<DNS_sec_addr>	String	IP address of the secondary DNS server

18.11 Dynamic DNS request +UDNS

+UDNS						
Modules	TOBY-L4					
	LARA-R2 TOBY-R2					
Attributes	**Syntax**	**PIN required**	**Settings saved**	**Can be aborted**	**Response time**	**Error reference**
	full	Yes	No	No	-	+CME Error

18.11.1 Description

Enables / disables a dynamic DNS (Domain Name Service) request before the PDP context/EPS bearer activation. After the activation of the PS data connection (triggered e.g. via +CGACT, dial-up, +UPSDA, or established during the LTE attach procedure), the DNS addresses of all activated PDP contexts/EPS bearers are listed in the information text response to the read command. Also the defined but not active contexts are listed; in this case the DNS addresses are "0.0.0.0".

The factory programmed behavior is to request DNS addresses of the same PDP type of the related <cid>. If the PDP type is not configured, no PCO will be sent and thus no DNS servers will be configured. For example, on an IPv4 configured PDP context, IPv4 DNS address will be requested to the network.

☞ Additional DNS configurations can be retrieved / configured with the +UPCO AT command.

18.11.2 Syntax

Type	Syntax	Response	Example
Set	AT+UDNS=<cid>,<mode>	OK	AT+UDNS=1,1 OK
Read	AT+UDNS?	[+UDNS: <cid>,<primary_DNS>, <secondary_DNS> [+UDNS: <cid>,<primary_DNS>, <secondary_DNS> [...]]] OK	+UDNS: 2,"8.8.8.8","8.8.4.4" OK
Test	AT+UDNS=?	+UDNS: (list of supported <cid>s), (list of supported <mode>s) OK	+UDNS: (1-11),(0-3) OK

18.11.3 Defined values

Parameter	Type	Description
<cid>	String	See <cid>.
<mode>	Number	Allowed values: • 0: disable the dynamic DNS request • 1: enable the dynamic DNS request (IPv4) • 2: enable the dynamic DNS request (IPv6) • 3: enable the dynamic DNS request (IPv4v6)
<primary_DNS>	String	IP address of the primary DNS server. See <PDP_addr> for a detailed parameter description. The default DNS address is "0.0.0.0".
<secondary_DNS>	String	IP address of the secondary DNS server. See <PDP_addr> for a detailed parameter description. The default DNS address is "0.0.0.0".

18.11.4 Notes

- The IPv6 address obtained on the LTE network will be prefixed with a constant 8 byte address "FE.80.00.00.00.00.00.00" if the network has not been provided.

TOBY-L4

- The IPv4 DNS request are contained in the IPCP component (Primary and Secondary DNS server) and in the PCO component, while the IPv6 DNS request is contained in the PCO component.

- The +UDNS AT command is typically used to add options. However, on the bases of the following DNS request transition table, the option NO_TYPE can be used to remove all DNS requests of the related <cid>.

Current DNS request	IPv4 (IN)	IPv6 (IN)	IPv4v6 (IN)	NO_TYPE (IN)
NO_TYPE	IPv4	IPv6	IPv4v6	NO_TYPE
IPv4	IPv4	IPv4v6	IPv4v6	NO_TYPE
IPv6	IPv4v6	IPv6	IPv4v6	NO_TYPE
IPv4v6	IPv4v6	IPv4v6	IPv4v6	NO_TYPE

Table 25: DNS request transition table

18.12 Quality of service profile (requested) +CGQREQ

+CGQREQ						
Modules	All products					
Attributes	**Syntax**	**PIN required**	**Settings saved**	**Can be aborted**	**Response time**	**Error reference**
	full	Yes	No	No	-	+CME Error

18.12.1 Description

Allows the DTE to specify the QoS (Quality of Service) profile requested from the Network during the PDP context activation procedure. The set command specifies the QoS profile for the context identified by the <cid> parameter. When set command is used with only <cid> parameter, it sets all requested QoS parameters for the given profile to their default value 0 (subscribed QoS).

☞ The command defines a PDP context having <PDP_type> set to "IP", <apn> set to "" and with the specified <cid>, if a PDP context with the specified <cid> was not already defined by +CGDCONT AT command.

☞ TOBY-L4 / TOBY-L2 / MPCI-L2
After the PDP context activation, the information text response to the read command provides the configuration negotiated with the network (similarly to +CGTFTRDP and +CGCONTRDP AT commands).

☞ If not specified the following values are assumed:
- <cid>:1
- <precedence>: 0
- <delay>: 0
- <reliability>: 0
- <peak>: 0
- <mean>: 0

18.12.2 Syntax

Type	Syntax	Response	Example
Set	AT+CGQREQ=[<cid>[,<precedence>[,<delay>[,reliability>[,<peak>[,<mean>]]]]]]	OK	AT+CGQREQ=1,1,1,1,1,1 OK
Read	AT+CGQREQ?	+CGQREQ: <cid>,<precedence>,<delay>,<reliability>,<peak>,<mean> OK	+CGQREQ: 1,1,1,1,1,1 OK
Test	AT+CGQREQ=?	+CGQREQ: <PDP_type>,(list of supported <precedence>s),(list of supported <delay>s),(list of supported <reliability>s), (list of supported <peak>s),(list of supported <mean>s) [+CGQREQ: <PDP_type>,(list of supported <precedence>s),(list of supported <delay>s),(list of supported <reliability>s), (list of supported <peak>s),(list of supported <mean>s)]	+CGQREQ: "IP",(0-3),(0-4),(0-5),(0-9),(0-18,31) OK

Type	Syntax	Response	Example
		[...]] OK	

18.12.3 Defined values

Parameter	Type	Description
<cid>	Number	See <cid>
<PDP_type>	String	See <PDP_type>
<precedence>	Number	Precedence class (for the description see the +UPSD command description), it can assume the values: • 0: network subscribed • 1: high priority • 2: normal priority • 3: low priority
<delay>	Number	Delay class according to 3GPP TS 24.008 [12] (QoS) (for the description see the +UPSD command description).
<reliability>	Number	Reliability class (see the +UPSD command description).
<peak>	Number	Peak throughput class (for the description see the +UPSD command description).
<mean>	Number	Mean throughput class (for the description see the +UPSD command description).

18.12.4 Notes

SARA-G4

- The <cid> parameter is mandatory.
- Define the <cid> context by means of the +CGDCONT AT command before to issue the +CGQREQ set command.
- The information text response to the read command provides the status of all the <cid> contexts including also the not defined contexts.

18.13 Quality of service profile (minimum acceptable) +CGQMIN

+CGQMIN						
Modules	All products					
Attributes	**Syntax**	**PIN required**	**Settings saved**	**Can be aborted**	**Response time**	**Error reference**
	full	Yes	No	No	-	+CME Error

18.13.1 Description

DTE specifies a minimum acceptable QoS (Quality of Service) profile which is checked by the MT against the negotiated QoS profile returned by the network during the PDP context activation procedure.

The set command specifies a QoS profile for the context identified by the <cid> parameter. The QoS profile consists in a set of parameters, each one is configurable. When the set command is used with only <cid> parameter, the minimum acceptable QoS profile for the given context is undefined. In this case no check is made against the negotiated QoS profile during PDP context activation.

☞ The command defines a PDP context having <PDP_type> set to "IP", <apn> set to "" and with the specified <cid>, if a PDP context with the specified <cid> was not already defined by +CGDCONT AT command.

☞ If not specified the following values are assumed:
- <cid>: 1
- <precedence>: 3
- <delay>: 4
- <reliability>: 5
- <peak>: 1
- <mean>: 1

18.13.2 Syntax

Type	Syntax	Response	Example
Set	AT+CGQMIN=[<cid>[,<precedence>[,<delay>[,reliability>[,<peak>[,<mean>]]]]]]	OK	AT+CGQMIN=1,1,1,1,1,1 OK
Read	AT+CGQMIN?	+CGQMIN: <cid>,<precedence>,<delay>,<reliability>,<peak>,<mean> OK	+CGQMIN: 1,1,1,1,1,1 OK
Test	AT+CGQMIN=?	+CGQMIN: <PDP_type>,(list of supported <precedence>s),(list of supported <delay>s),(list of supported <reliability>s), (list of supported <peak>s),(list of supported <mean>s) [+CGQMIN: <PDP_type>,(list of supported <precedence>s),(list of supported <delay>s),(list of supported <reliability>s), (list of supported <peak>s),(list of supported <mean>s) [...]] OK	+CGQMIN: "IP",(0-3),(0-4),(0-5),(0-9),(0-18,31) OK

18.13.3 Defined values

Parameter	Type	Description
<cid>	Number	See <cid>
<PDP_type>	String	See <PDP_type>
<precedence>	Number	Precedence class (for the description see the +UPSD command description), it can assume the values: • 0: network subscribed • 1: high priority • 2: normal priority • 3: low priority
<delay>	Number	Delay class according to 3GPP TS 24.008 [12] (QoS) (for the description see the +UPSD command description).
<reliability>	Number	Reliability class (see the +UPSD command description).
<peak>	Number	Peak throughput class (for the description see the +UPSD command description).
<mean>	Number	Mean throughput class (for the description see the +UPSD command description).

18.14 GPRS attach or detach +CGATT

+CGATT						
Modules	All products					
Attributes	**Syntax**	**PIN required**	**Settings saved**	**Can be aborted**	**Response time**	**Error reference**
	full	Yes	No	Yes	Up to 3 min	+CME Error

18.14.1 Description

Register (attach) the MT to, or deregister (detach) the MT from the GPRS service. After this command the MT remains in AT command mode. If the MT is already in the requested state (attached or detached), the command is ignored and OK result code is returned. If the requested state cannot be reached, an error result code is returned. The command can be aborted if a character is sent to the DCE during the command execution. Any active PDP context will be automatically deactivated when the GPRS registration state changes to detached.

☞ The user should not enter colliding requests (e.g. AT+CGATT=1 and AT+CGATT=0) on different communication ports, because this might cause interoperability issues in case overlapping attach and detach requests are not handled by the network, and could result in an unpredictable registration state. Similarly, when notified of a mobile terminated GPRS detach event (e.g. via +CGEV URC), it is

recommended to wait a few seconds before entering AT+CGATT=0 in order to let the pending attach procedure (automatically triggered by the module in most cases) successfully end.

☞ TOBY-L4 / TOBY-L2 / MPCI-L2 / LARA-R202 / LARA-R211 / LARA-R280 / TOBY-R2 / SARA-U2 / LISA-U2 / LISA-U1 / SARA-G4 / SARA-G3 / LEON-G1
If MT is configured in class "B" (see the +CGCLASS AT command) and the GSM registration has not yet been performed, AT+CGATT=1 triggers both GSM and GPRS registration. If the command is aborted before the PS registration has ended, the CS registration is completed and the MT goes into class "CC".

☞ The deregistration action is carried out even if the command is aborted.

18.14.2 Syntax

Type	Syntax	Response	Example
Set	AT+CGATT=[<state>]	OK	AT+CGATT=1 OK
Read	AT+CGATT?	+CGATT: <state> OK	+CGATT: 1 OK
Test	AT+CGATT=?	+CGATT: (list of supported <state>s) OK	+CGATT: (0-1) OK

18.14.3 Defined values

Parameter	Type	Description
<state>	Number	Indicates the state of GPRS attachment: • 0: detached • 1 (default value): attached

18.14.4 Notes

SARA-U2 / LISA-U2 / LISA-U1 / SARA-G4 / SARA-G3 / LEON-G1

- Unless the MS is detached from GPRS service due to a previously performed GPRS detach, the set command with <state>=1 triggers a user reselection. In this case a search for the HPLMN or a higher order PLMN is triggered (for more details see +COPS and 3GPP TS 23.122 [70]).

18.15 Configure the auto attach to PS domain on power on +UCGATT

+UCGATT						
Modules	TOBY-L2 MPCI-L2					
Attributes	Syntax	PIN required	Settings saved	Can be aborted	Response time	Error reference
	full	Yes	NVM	No	-	+CME Error

18.15.1 Description

Configures the auto attach to PS domain at the module power on. The PS attach will be triggered in case the user requires data connectivity. When PDP contexts have been disabled by the module or by the network, the device automatically performs the PS detach.

The configuration of the auto attach is stored in the NVM and will be effective at the next power on.

☞ When <mode>=0, the UE will not register on LTE RAT because CS only registration is not supported by the LTE standard (see +CEMODE command description). On 2G and 3G RAT, the UE will perform registration on CS domain only.

18.15.2 Syntax

Type	Syntax	Response	Example
Set	AT+UCGATT=<mode>	OK	AT+UCGATT=1 OK

Type	Syntax	Response	Example
Read	AT+UCGATT?	+UCGATT: <mode> OK	+UCGATT: 1 OK
Test	AT+UCGATT=?	+UCGATT: (list of supported <mode>s) OK	+UCGATT: (0-1) OK

18.15.3 Defined values

Parameter	Type	Description
<mode>	Number	Auto attach configuration: • 0: auto attach to PS domain at switch on is disabled • 1 (factory-programmed value): auto attach to PS domain at switch on is enabled

18.15.4 Notes

TOBY-L200-03A / TOBY-L200-03S / TOBY-L210-03A / TOBY-L210-03S / TOBY-L280-03A / TOBY-L280-03S / MPCI-L200-03S / MPCI-L210-03S / MPCI-L280-03S

- The automatic PS detach when all PDP contexts have been deactivated is not supported.

18.16 PDP context activate or deactivate +CGACT

+CGACT						
Modules	All products					
Attributes	**Syntax**	**PIN required**	**Settings saved**	**Can be aborted**	**Response time**	**Error reference**
	full	Yes	No	Yes	Up to 40-150 s (see below)	+CME Error

18.16.1 Description

Activates or deactivates the specified PDP context. After the command, the MT remains in AT command mode. If any context is already in the requested state, the state for the context remains unchanged. If the required action cannot succeed, an error result code is returned. If the MT is not GPRS attached when the activation of a PDP context is required, the MT first performs a GPRS attach and then attempts to activate the specified context.

The maximum expected response time is different whenever the activation or the deactivation of a PDP context is performed (150 s and 40 s respectively).

The command can be aborted if a character is sent to the DCE during the command execution: if a PDP context activation on a specific <cid> was requested, the PDP context deactivation is performed; if a multiple PDP context activation was requested, it is aborted after the pending PDP context activation has finished.

☞ The deactivation action is carried out even if the command is aborted.

Note that:

- TOBY-L4 / LARA-R2 / TOBY-R2 - After having aborted the PDP context activation, the command line is not immediately returned.
- SARA-U2 / LISA-U2 - After having aborted the PDP context activation, the command line is immediately returned but the procedure to activate the context is still running and will be completed.

☞ LARA-R2 / TOBY-R2
The read command shows PDP contexts/EPS bearers defined by IMS, BIP and OMA-DM internal clients but they cannot be activated or deactivated.

☞ TOBY-L4 / LARA-R2 / TOBY-R2
The usage of AT+CGACT=0 without specifying the <cid> parameter is deprecated because it can deactivate also PDP contexts / EPS bearer used by internal clients e.g. BIP and OMA-DM.

☞ TOBY-L4 / TOBY-L2 / MPCI-L2 / LARA-R2 / TOBY-R2 / SARA-U2 / LISA-U2 / LISA-U1 / SARA-G4 / SARA-G3 / LEON-G1
AT+CGACT command (both in successful and unsuccessful case) triggers signalling attempts whose number is internally counted by the SW and limited based on MNO specific thresholds. The AT&T RPM

feature (see also the +URPM AT command) and the Verizon configuration (see the +UMNOCONF AT command) might cause the AT command to return an error result code when the maximum number of attempts has been reached. In these cases, the command might become available again after a while.

18.16.2 Syntax

Type	Syntax	Response	Example
Set	AT+CGACT=[<status>[,<cid>[,...]]]	OK	AT+CGACT=1,1 OK
Read	AT+CGACT?	[+CGACT: <cid>,<status> [+CGACT: <cid>,<status> [...]]] OK	+CGACT: 1,1 OK
Test	AT+CGACT=?	+CGACT: (list of supported <status>s) OK	+CGACT: (0-1) OK

18.16.3 Defined values

Parameter	Type	Description
<status>	Number	Indicates the state of PDP context activation: • 0: deactivated • 1: activated
<cid>	Number	See <cid>.

18.16.4 Notes

TOBY-L4 / LARA-R2 / TOBY-R2 / SARA-U2 / LISA-U2 / LISA-U1 / SARA-G4 / SARA-G3 / LEON-G1

- If <cid> is not defined, the command activates or deactivates all the defined PDP contexts.
- The number of PDP contexts defined with AT+CGDCONT plus the number of contexts activated with AT +UPSDA should not exceed the maximum number of definable PDP contexts (e.g. 3 or 11): in that case any further request to define a context with AT+CGDCONT or to activate a context with AT+UPSDA will generate an error result code.
- Do not issue this command to configure internal PDP contexts (see +UCSD, +UCSDA and +UCSND AT commands for establishing a CSD connection and +UPSD, +UPSDA and +UPSND AT commands for establishing a PSD connection).

LARA-R204

- In Verizon configuration (+UMNOCONF: 7), the <cid> parameter shall always be specified when activating a context, otherwise an error result code is provided.

SARA-G300 / SARA-G310

- As the module supports one active PDP context, if more than one PDP context is defined, a request to activate all defined PDP contexts with <status>=1 and omitted <cid> generates an error result code.

LEON-G100-06S

- The command cannot be aborted.

TOBY-L2 / MPCI-L2

- If <cid> is not defined, the command activates or deactivates all the defined PDP contexts.
- The number of PDP contexts defined with AT+CGDCONT plus the number of contexts activated with AT +UPSDA should not exceed the maximum number of definable PDP contexts (e.g. 3 or 11): in that case any further request to define a context with AT+CGDCONT or to activate a context with AT+UPSDA will generate an error result code.
- Do not issue this command to configure internal PDP contexts (see +UPSD, +UPSDA and +UPSND AT commands for establishing a PSD connection).
- The AT+CGACT=0 command returns an error result code in LTE network.
- If <cid> parameter is out of range (<cid>=0 or greater than 8), the command activates or deactivates all the defined PDP contexts.

TOBY-L210-62S

- A single data PDP context is allowed.

18.16.5 Examples

Examples of usage of +CGDCONT, +CGACT, +CGPADDR command:

Command sent by the DTE	DCE response	Description
AT+CMEE=2	OK	Set the verbose error result codes
AT+COPS=0	OK	
AT+COPS?	+COPS: 0,0,"vodafone IT" OK	
AT+CGDCONT=1,"IP","web.omnitel.it"	OK	Define several PDP contexts
AT+CGDCONT=3,"IP","internet"	OK	
AT+CGDCONT=2,"IP", "mms.vodafone.it"	OK	
AT+CGDCONT?	+CGDCONT: 1,"IP","web.omnitel.it","0.0.0.0",0,0 +CGDCONT: 3,"IP","internet","0.0.0.0",0,0 +CGDCONT: 2,"IP","mms.vodafone.it","0.0.0.0",0,0 OK	Read PDP contexts
AT+CGACT=1,1	OK	Activate the PDP context 1
AT+CGPADDR=1	+CGPADDR: 1, "91.80.104.82" OK	Show address of the PDP context 1
AT+CGPADDR=2	+CGPADDR: 2, "0.0.0.0" OK	Show the address of PDP context 2
AT+CGPADDR=3	+CGPADDR: 3, "0.0.0.0" OK	Show the address of PDP context 3
AT+CGDCONT?	+CGDCONT: 1,"IP","web.omnitel.it","91.80.104.82",0,0 +CGDCONT: 3,"IP","internet","0.0.0.0",0,0 +CGDCONT: 2,"IP","mms.vodafone.it","0.0.0.0",0,0 OK	
AT+CGACT=0,1	OK	Deactivate the PDP context 1
AT+CGDCONT?	+CGDCONT: 1,"IP","web.omnitel.it","0.0.0.0",0,0 +CGDCONT: 3,"IP","internet","0.0.0.0",0,0 +CGDCONT: 2,"IP","mms.vodafone.it","0.0.0.0",0,0 OK	
AT+CGACT=1	OK	Activate all of defined PDP contexts
AT+CGDCONT?	+CGDCONT: 1,"IP","web.omnitel.it","91.80.101.207",0,0 +CGDCONT: 3,"IP","internet","83.225.114.136",0,0 +CGDCONT: 2,"IP","mms.vodafone.it","10.159.135.60", 0,0 OK	
AT+CGPADDR=1	+CGPADDR: 1, "91.80.101.207" OK	Show the address of PDP context 1
AT+CGPADDR=2	+CGPADDR: 2, "10.159.135.60" OK	Show the address of PDP context 2
AT+CGACT=0	OK	Deactivate all of defined PDP contexts
AT+CGPADDR=2	+CGPADDR: 2, "0.0.0.0" OK	Show the address of PDP context 2

Command sent by the DTE	DCE response	Description
AT+CGPADDR=3	+CGPADDR: 3, "0.0.0.0" OK	Show the address of PDP context 3
AT+CGDCONT?	+CGDCONT: 1,"IP","web.omnitel.it","0.0.0.0",0,0 +CGDCONT: 3,"IP","internet","0.0.0.0",0,0 +CGDCONT: 2,"IP","mms.vodafone.it","0.0.0.0",0,0 OK	
AT+CGACT=1,2	OK	Activate the PDP context 2
AT+CGDCONT?	+CGDCONT: 1,"IP","web.omnitel.it","0.0.0.0",0,0 +CGDCONT: 3,"IP","internet","0.0.0.0",0,0 +CGDCONT: 2,"IP","mms.vodafone.it","10.153.123.229",0,0 OK	
AT+CGACT=1,3	OK	Activate PDP context 3
AT+CGDCONT?	+CGDCONT: 1,"IP","web.omnitel.it","0.0.0.0",0,0 +CGDCONT: 3,"IP","internet","83.225.171.77",0,0 +CGDCONT: 2,"IP","mms.vodafone.it","10.153.123.229",0,0 OK	
AT+CGACT=1,1	OK	Activate the PDP context 1
AT+CGDCONT?	+CGDCONT: 1,"IP","web.omnitel.it","91.80.175.163",0,0 +CGDCONT: 3,"IP","internet","83.225.171.77",0,0 +CGDCONT: 2,"IP","mms.vodafone.it","10.153.123.229",0,0 OK	
AT+CGACT=0	OK	Deactivate all of defined PDP contexts
AT+CGDCONT?	+CGDCONT: 1,"IP","web.omnitel.it","0.0.0.0",0,0 +CGDCONT: 3,"IP","internet","0.0.0.0",0,0 +CGDCONT: 2,"IP","mms.vodafone.it","0.0.0.0",0,0 OK	

18.17 Control ESM cause 52 handling +UDCONF=12

+UDCONF=12						
Modules	LARA-R202 LARA-R203 LARA-R220 LARA-R280 TOBY-R2					
Attributes	**Syntax**	**PIN required**	**Settings saved**	**Can be aborted**	**Response time**	**Error reference**
	full	No	NVM	No	-	+CME Error

18.17.1 Description

Enables / disables additional context establishment when SM cause 52 is reported on an IPv4v6 context activation.

☞ When a new IPv4IPv6 (<PDP_type>="IPV4V6") context activation is requested by means of the +CGACT command the network might respond with ESM CAUSE 52 (Single Address Bearer only allowed). In this case the module will automatically establish a new PDP context with the same properties but with the missing PDP IP type.

18.17.2 Syntax

Type	Syntax	Response	Example
Set	AT+UDCONF=12,<value>	OK	AT+UDCONF=12,1 OK
Read	AT+UDCONF=12	+UDCONF: 12,<value>	AT+UDCONF=12

Type	Syntax	Response	Example
		OK	+UDCONF: 12,1 OK

18.17.3 Defined values

Parameter	Type	Description
<value>	Number	Allowed values: • 0: disables the additional context activation • 1 (factory-programmed value): enables the additional context activation

18.18 Manual response to a network request for PDP context activation +CGANS

+CGANS						
Modules	TOBY-L4					
	LARA-R2 TOBY-R2					
	SARA-U201-63B LISA-U200-62S					
Attributes	**Syntax**	**PIN required**	**Settings saved**	**Can be aborted**	**Response time**	**Error reference**
	full	Yes	No	No	Up to 150 s	+CME Error

18.18.1 Description

Requests the MT to respond to a network request for the packet domain PDP context activation which has been indicated to the TE by the RING or +CRING URC.

☞ This command is not equivalent to issuing a +CGDATA or +CGACT command after having received a +CRING URC: +CGDATA or +CGACT would not command the MT to acknowledge the network request indicated by the +CRING URC but would trigger a new independent PDP context activation.

18.18.2 Syntax

Type	Syntax	Response	Example
Set	AT+CGANS=[<response>,[<L2P>,[<cid>]]]	OK	AT+CGANS=1 OK
Test	AT+CGANS=?	+CGANS: (list of supported <response>s),(list of supported <L2P>s) OK	+CGANS: (0,1),("PPP","M-OPT-PPP","M-HEX","M-RAW_IP","M-PPP-RELAY") OK

18.18.3 Defined values

Parameter	Type	Description
<response>	Number	Response action. Allowed values: • 0 (default value): reject the request • 1: accept and request the PDP context activation
<L2P>	String	Layer 2 protocol to be used between the DTE and MT; allowed values: • "PPP" (default value) • "M-HEX" • "M-RAW_IP" • "M-OPT-PPP" • SARA-U201-63B / LISA-U200-62S only - "M-PPP-RELAY" ☞ The application on the remote side must support the selected protocol as well.
<cid>	Number	See <cid>

18.18.4 Notes

- Typically only AT+CGANS=0 or AT+CGANS=1 are needed: the MT will automatically handle the remaining parameters.

- If the <L2P> parameter value is unacceptable to the MT, the MT shall return an error result code. Otherwise, the MT issues the CONNECT IRC and enters V.250 online data state. If the <L2P> is omitted then the MT will default it to "PPP" if the <PDP_type>="IP" or to "M-PPP-RELAY" if the <PDP_type>="PPP".
- If no <cid> is given or if there is no matching context definition, the MT will attempt to activate the context using the values for <PDP_type> and <PDP_addr> provided by the network, together with any other relevant information known to the MT. If the activation is successful, data transfer may proceed.

SARA-U201-63B / LISA-U200-62S

- The maximum number of network initiated PDP contexts that can be accepted is 1.

TOBY-L2 / MPCI-L2

- Only <L2P>="PPP" value is supported. There is no support for IPv6 over PPP (PPPv6).

SARA-G3 / LEON-G1

- <L2P>= "M-OPT-PPP" is not supported.

18.19 Automatic response to a network request for PDP context activation +CGAUTO

+CGAUTO						
Modules	TOBY-L4					
	LARA-R2 TOBY-R2					
	SARA-U201-63B LISA-U200-62S					
Attributes	**Syntax**	**PIN required**	**Settings saved**	**Can be aborted**	**Response time**	**Error reference**
	full	Yes	No	No	-	+CME Error

18.19.1 Description

Disables or enables an automatic positive or negative response (auto-answer) to the reception of a NW-initiated request PDP context activation message. It also provides the control over the use of the V.250 basic commands +CGDATA or S0, A and H for the handling network requests for a PDP context activation. The setting does not affect the issuing of the RING or +CRING URCs.

18.19.2 Syntax

Type	Syntax	Response	Example
Set	AT+CGAUTO=[<action>]	OK	AT+CGAUTO=0 OK
Read	AT+CGAUTO?	+CGAUTO: <action> OK	+CGAUTO: 1 OK
Test	AT+CGAUTO=?	+CGAUTO: (list of supported <action>s) OK	+CGAUTO: (0-4) OK

18.19.3 Defined values

Parameter	Type	Description
<action>	Number	Auto-answer action. The allowed values are: • 0 (default value): turn off the automatic response for Packet Domain only • 1: turn on the automatic response for Packet Domain only • 2: modem compatibility mode, Packet Domain only • 3 (factory-programmed value): modem compatibility mode, Packet Domain and circuit switched calls • 4: turn on the automatic negative response for Packet Domain only

18.19.4 Notes

- If <action>=0 the packet domain network requests are manually accepted or rejected by +CGANS commands.
- If <action>=1 the packet domain network requests are automatically accepted.

- If <action>=2 the automatic acceptance of the packet domain network requests is controlled by the S0 command. The manual control uses the A and H commands, respectively, to accept and reject the packet domain requests (+CGANS may also be used). The incoming circuit switched calls can be neither manually nor automatically answered.
- For <action>=3 automatic acceptance of both packet domain network requests and incoming circuit switched calls is controlled by the S0 command. The manual control uses the A and H commands, respectively, to accept and reject the packet domain requests (+CGANS may also be used).
- For <action>=4 the packet domain network requests are automatically rejected.

LARA-R2 / TOBY-R2

- The factory-programmed value of <action> parameter is 1.

18.20 Enter data state +CGDATA

+CGDATA						
Modules	TOBY-L2 MPCI-L2					
	LARA-R2 TOBY-R2					
	SARA-U2 LISA-U2 LISA-U1					
	SARA-G4 SARA-G3 LEON-G1					
Attributes	**Syntax**	**PIN required**	**Settings saved**	**Can be aborted**	**Response time**	**Error reference**
	full	Yes	No	No	Up to 3 min (<1 s for prompt ">" when present)	+CME Error

18.20.1 Description

Causes the MT to set up a data communication channel between the DTE and the PDP network. For the u-blox specific L2 modes M-HEX and M-RAW_IP, this means performing a GPRS attach and one or more PDP context activations, if not already done.

If the parameters are accepted (and optionally the PDP context is successfully activated), the MT displays the CONNECT IRC on the DTE and enters the online data mode, thus allowing data transfer. Other commands following +CGDATA in the command line will be processed. When the data transfer is completed, the MT re-enters into command mode and the final result code is displayed on DTE.

In case of error the final result code NO CARRIER or +CME ERROR: <error> is displayed.

☞ If not specified, value 1 is assumed for <cid>.

☞ The session is terminated sending **~+++**, which may cause the deactivation, if active, of the PDP context depending on DTR line status, i.e. on the AT&D setting (see Chapter 15.3.4 and Chapter 15.3.5). When using M-HEX as L2 protocol and AT&D2 is used, the channel is switched back to command mode but the PDP context remains active.

☞ When using PPP as L2 protocol, no GPRS attach and no PDP context activation are performed until the PPP on the DTE side starts communication with the PPP on the MT side.

The M-HEX L2 protocol (AT+CGDATA="M-HEX",1) can be used as follows:

```
<int: counter> <int: length[1-1500]> <hex-sequence>[0-9a-fA-F]
cid=<int: cid>
+++<CR>
```

The following table shows some examples:

Example	Description
1 200<CR>	Send 1 packet with 200 0x2B (fill character)
5 5<CR>	Send 5 packets with 5 0x2B (fill character)
1 5 31 32 33 34 35<CR>	Send 1 packet with the given contents
1 5 1 2 3 4 05<CR>	Send 1 packet with the given contents
1 10 31 Q<CR>	Send 1 packet with 10 0x31
cid=2	Send packets on cid 2 (this requires two active PDP contexts and the M-HEX L2 protocol entered on <cid> = 1

Example	Description
+++	Leave the online mode

A packet is sent if one of the following conditions is met:
- the length field is terminated with <CR>
- the length value is equal to # characters of hex-sequence and it is terminated with <CR>
- the input is terminated with a character not equal to a hex digit and <CR>

☞ The PIN insertion is not mandatory for the local dial-up, started with <cid> set to 100.

☞ This syntax of the command is mainly used to perform regulatory and conformance testing.

18.20.2 Syntax

Type	Syntax	Response	Example
Set	AT+CGDATA=[<L2P>[,<cid>]]	CONNECT (data transfer starts)	AT+CGDATA="PPP",1 CONNECT
Test	AT+CGDATA=?	+CGDATA: (list of supported <L2P>s) OK	+CGDATA: ("PPP","M-HEX","M-RAW_IP","M-OPT-PPP") OK

18.20.3 Defined values

Parameter	Type	Description
<L2P>	String	Layer 2 protocol to be used between the DTE and MT; allowed values: • "PPP" (default value) • "M-HEX" • "M-RAW_IP" • "M-OPT-PPP" • SARA-U201-63B / LISA-U200-62S only - "M-PPP-RELAY" ☞ The application on the remote side must support the selected protocol as well.
<cid>	Number	See <cid>

18.20.4 Notes

- The cid command, which has not to be confused with the <cid> parameter, can be used while in data mode for switching to a PDP context already active.
- The cid command accepts as parameter a <cid> value corresponding to a PDP context already active and has to be typed in lower-case.
- Usage of +CGDATA command:

Command sent by DTE	DCE response	Description
AT+CMEE=2	OK	Use verbose error result codes
AT&D0	OK	
AT+CGDCONT=1,"IP","web.omnitel.it"	OK	Define two PDP contexts
AT+CGDCONT=2,"IP","internet"	OK	
AT+CGACT=1,2	OK	Activate PDP context 2
AT+CGDATA="M-HEX",1	CONNECT	Activate PDP context 1 and establish mandatory L2 protocol between DTE and MT
1100	DATA OK	Send one packet of 100 bytes
cid=2	OK	Switch to the already activated context 2
~+++	NO CARRIER	Only the first activated context or the last used is closed

TOBY-L2 / MPCI-L2
- Only <L2P>="PPP" value is supported. There is no support for IPv6 over PPP (PPPv6).

TOBY-L200-00S / TOBY-L210-00S / TOBY-L210-60S / MPCI-L200-00S / MPCI-L210-00S / MPCI-L210-60S

- The OLCM is not supported.

TOBY-L210-62S

- A single data PDP context is allowed.

SARA-U201-04A / SARA-U201-04B / SARA-U201-04X / SARA-U270-04B

- On the AUX UART interface, the command is not supported.

SARA-G3 / LEON-G1

- <L2P>= "M-OPT-PPP" is not supported.
- The module does not start in PPP silent mode.

SARA-G4

- Only <L2P>= "PPP" value is supported.

SARA-G340-02S / SARA-G340-02X / SARA-G350-02A / SARA-G350-02S / SARA-G350-02X

- On the AUX UART interface, the command is not supported.

18.21 Enter PPP state/GPRS dial-up D*

D*						
Modules	TOBY-L2 MPCI-L2					
	LARA-R2 TOBY-R2					
	SARA-U2 LISA-U2 LISA-U1					
	SARA-G4 SARA-G3 LEON-G1					
Attributes	**Syntax**	**PIN required**	**Settings saved**	**Can be aborted**	**Response time**	**Error reference**
	full	Yes	No	No	Up to 3 min	+CME Error

18.21.1 Description

The V.24 dial command "D", similar to the command with the syntax AT+CGDATA="PPP",<cid>, causes the MT to perform the necessary actions to establish the communication between the DTE and the external PDP network through the PPP protocol. This can include performing a PS attach and, if the PPP server on the DTE side starts communication, PDP context activation on the specified PDP context identifier (if not already requested by means of +CGATT and +CGACT commands).

If the command is accepted and the preliminary PS procedures have succeeded, the "CONNECT" intermediate result code is returned, the MT enters the V.25ter online data state and the PPP L2 protocol between the MT and the DTE is started.

☞ The data session is terminated by one of the following events:

- sending **~+++**.
- via a DTR transition from ON to OFF.
- sending an LCP Terminate Request.

☞ TOBY-L2 / MPCI-L2 / LARA-R2 / TOBY-R2 / SARA-U2 / LISA-U2 / LISA-U1 / SARA-G4 / SARA-G3 / LEON-G1
For more details see the Table 19.

If used with <cid>= 100, this command can enable the local dial-up, that establishes a PPP communication between the DTE and the module through a serial interface (UART, MUX, or CDC-ACM). In this case an active PDP context is not needed since the DTE is assigned a private IP address.

18.21.2 Local dial-up

☞ TOBY-L2 / MPCI-L2
The section applies only to these module series.

The local dial-up feature is enabled by performing a dial-up on <cid>= 100. It establishes a PPP communication between the DTE and the module through a serial interface (UART, MUX, or CDC-ACM). An IP link is created by assigning private IP addresses to the endpoints. An active PDP context is not needed. The IP traffic is automatically routed by the module, thus allowing the DTE to communicate with:

- the internet through an active PDP context (at least one PDP context/EPS bearer is needed for the IP connectivity). By default, the first PDP context activated is used to convey the data;
- a device connected to the Virtual Ethernet over USB (RNDIS/CDC-ECM);
- devices (STA) connected to the Wi-Fi access point (AP) of the cellular module (see Wi-Fi section).

The feature has been studied to work in router mode.

In general no defined / no active context is required to use local dial-up. The local dial-up is in any case able to communicate with the interfaces connected to the module IP stack, as for example RNDIS and Wi-Fi interfaces.

The local dial-up feature does not support the OnLine Command Mode (OLCM). Furthermore the DTR ON to OFF transition and the ~+++ cannot be used to terminate the local dial-up (the procedure described in ~+++ behavior in PSD &D is not applicable).

The PIN insertion is not mandatory for the local dial-up feature.

The local dial-up feature supports only IPv4 connectivity.

18.21.3 Syntax

Type	Syntax	Response	Example
Set	ATD[<dialing_type_char>]*<dialing_number>[*[<address>][*[<L2P>][*[<cid>]]]]#	CONNECT (data transfer starts)	ATD*99***1# CONNECT

18.21.4 Defined values

Parameter	Type	Description
<dialing_type_char>	String	Optional (legacy) "T" or "P" character indicating the tone dialing or pulse dialing respectively
<dialing_number>	Number	List all the supported values
<address>	-	Ignored
<L2P>	String	Layer 2 protocol to be used between the DTE and MT; allowed values: • "PPP" (default value) • "M-HEX" • "M-RAW_IP" • "M-OPT-PPP" • SARA-U201-63B / LISA-U200-62S only - "M-PPP-RELAY" ☞ The application on the remote side must support the selected protocol as well.
<cid>	Number	See <cid>

18.21.5 Notes

- Dial-up with PAP/CHAP authentication is not supported on an already active PDP context that was activated without authentication.
- The context identifier <cid> is mapped to 1 if not specified.
- The GPRS dial-up command maps to AT+CGDATA="PPP",<cid>.
- If FDN is enabled and FDN check for PS data call is supported by the module, to perform a GPRS dial-up one of the following entries must be stored in the FDN phonebook: *99#, *99*#, *99**# or *99***#.

TOBY-L2 / MPCI-L2

- Only <L2P>="PPP" value is supported. There is no support for IPv6 over PPP (PPPv6). Performing a dial-up on a IPv6 EPS bearer/PDP context (see +CGDCONTAT command) the command will provide an error result code and the IP connectivity will not be established.
- Dial-up on an already active <cid> context identifier is not supported if the current AT+UUSBCONF command setting enables the virtual Ethernet device, since it could disrupt an already active communication over the USB link. To use the required <cid> the user should manually deactivate it with AT+CGACT first.
- The above limitation does not apply to the 'Fairly back-compatible' AT+UUSBCONF configuration. At the end of the PPP session the <cid> will be deactivated regardless of its previous status, if possible: if the module is registered in LTE network then the last active <cid> context identifier cannot be deactivated.

TOBY-L200-00S / TOBY-L201 / TOBY-L210-00S / TOBY-L210-60S / MPCI-L201 / MPCI-L210-60S

- The local dial-up feature is not supported.

SARA-U201-04A / SARA-U201-04B / SARA-U201-04X / SARA-U270-04B

- On the AUX UART interface, the command is not supported.

SARA-G4 / SARA-G3 / LEON-G1

- <L2P>= "M-OPT-PPP" is not supported.

SARA-G340-02S / SARA-G340-02X / SARA-G350-02A / SARA-G350-02S / SARA-G350-02X

- On the AUX UART interface, the command is not supported.

18.22 Show PDP address +CGPADDR

+CGPADDR						
Modules	All products					
Attributes	**Syntax**	**PIN required**	**Settings saved**	**Can be aborted**	**Response time**	**Error reference**
	full	Yes	No	No	-	+CME Error

18.22.1 Description

Returns a list of PDP addresses for the specified context identifiers. Only defined PDP contexts are displayed.

If the <cid> parameter is omitted, the addresses for all defined contexts are returned.

18.22.2 Syntax

Type	Syntax	Response	Example
Set	AT+CGPADDR=[<cid>[,<cid> [,...]]]	+CGPADDR: <cid>,<PDP_addr> [+CGPADDR: <cid>,<PDP_addr> [...]] OK	AT+CGPADDR=1 +CGPADDR: 1,"1.2.3.4" OK
Test	AT+CGPADDR=?	+CGPADDR: [(list of defined <cid>s)] OK	+CGPADDR: 1,3 OK

18.22.3 Defined values

Parameter	Type	Description
<cid>	Number	See <cid>
<PDP_addr>	Number	See <PDP_addr>

18.23 GPRS MS class configuration +CGCLASS

+CGCLASS						
Modules	All products					
Attributes	**Syntax**	**PIN required**	**Settings saved**	**Can be aborted**	**Response time**	**Error reference**
	full	Yes	No	No	Up to 3 min	+CME Error

18.23.1 Description

Forces the detach/attach to the disabled/enabled service.

The read command gives the current class which does not depend on user settings but on the current registration state (e.g. on a CS cell only, class CC is returned).

The dial-up connection is not allowed if the module class was set to CC by means of this command.

If the module class was not forced to CC by the user, the dial-up connection is allowed even if the module is not registered for PS services (e.g. AT+CGATT=0 was entered), as it will trigger a PS registration beforehand.

18.23.2 Syntax

Type	Syntax	Response	Example
Set	AT+CGCLASS=[<class>]	OK	AT+CGCLASS="B" OK
Read	AT+CGCLASS?	+CGCLASS: <class> OK	+CGCLASS: "B" OK
Test	AT+CGCLASS=?	+CGCLASS: (list of supported <class>s) OK	+CGCLASS: ("A","B","CC","CG") OK

18.23.3 Defined values

Parameter	Type	Description
<class>	String	GPRS mobile class • "A" (default value in Iu mode): class-A mode of operation (A/Gb mode), or CS/PS mode of operation (Iu mode) (highest mode of operation) • "B" (default value in A/Gb mode): class B mode of operation (the MT can operate in both circuit-switched and packet-switched services but not simultaneously) • "CC": class CC mode of operation (the MT can operate only in circuit-switched service) • "CG": class CG mode of operation (the MT can operate only in packet-switched service)

18.23.4 Notes

- <class>="A" is only supported when in Iu mode.
- When in Iu mode (i.e. UMTS RAT), class A and class B have equivalent meanings (both CS and PS services supported). When in A/Gb mode (i.e. GSM RAT), class-A mode operation is not supported.

TOBY-L2 / MPCI-L2

- If the module is set to "CG" class with +CGCLASS command, the manual selection of a forbidden PLMN shall be triggered with +UCGOPS command; the AT+COPS=1 command cannot be issued for this purpose.
- To change the module class it is needed to deregister it from network with AT+COPS=2, change the class type and again register the module on the network

SARA-G4 / SARA-G3 / LEON-G1

- To change the module class it is needed to deregister it from network with AT+COPS=2, change the class type and again register the module on the network.
- <class>="A" is not supported.

18.24 GPRS MS class configuration at start up +UCGCLASS

+UCGCLASS						
Modules	TOBY-L2 MPCI-L2					
	LARA-R2 TOBY-R2					
	SARA-U2 LISA-U2 LISA-U1					
Attributes	**Syntax**	**PIN required**	**Settings saved**	**Can be aborted**	**Response time**	**Error reference**
	partial	Yes	NVM	No	-	+CME Error

18.24.1 Description

Sets the startup class. If the class is set to CS only, before activating a PDP context it is necessary to trigger a PS attach via +CGATT=1 or to change the class to B.

The current MS class will be stored in NVM and used at the next module power on.

☞ u-blox cellular modules are certified according to all the capabilities and options stated in the Protocol Implementation Conformance Statement document (PICS) of the module. The PICS, according to 3GPP TS 51.010-2 [84], 3GPP TS 34.121-2 [85], 3GPP TS 36.521-2 [115] and 3GPP TS 36.523-2 [116], is a statement of the implemented and supported capabilities and options of a device. If the user changes the command

settings during the certification process, the PICS of the application device integrating a u-blox cellular module must be changed accordingly.

18.24.2 Syntax

Type	Syntax	Response	Example
Set	AT+UCGCLASS=<class>	OK	AT+UCGCLASS="CC" OK
Read	AT+UCGCLASS?	+UCGCLASS: <class> OK	+UCGCLASS: "B" OK
Test	AT+UCGCLASS=?	+UCGCLASS: (list of supported <class>s) OK	+UCGCLASS: ("B","CC") OK

18.24.3 Defined values

Parameter	Type	Description
<class>	String	• "B" (factory-programmed value): MS class B (the MT supports both circuit-switched and packet-switched services) • "CC": MS class C (the MT supports only circuit switched services)

18.24.4 Notes

- If "CC" is selected, the network selection (+COPS AT command) triggers a registration only for CS services.
- If "CC" is selected, +CGATT=1 forces the registration for PS services (i.e. +UCGCLASS' setting is ignored)

TOBY-L2 / MPCI-L2

- The PIN insertion is not mandatory.

18.25 Device class setting +UCLASS

+UCLASS						
Modules	TOBY-L2 MPCI-L2					
	LARA-R2 TOBY-R2					
	SARA-U2 LISA-U2 LISA-U1					
	SARA-G4 SARA-G3 LEON-G1					
Attributes	**Syntax**	**PIN required**	**Settings saved**	**Can be aborted**	**Response time**	**Error reference**
	partial	No	NVM	No	-	+CME Error

18.25.1 Description

Changes the module's GPRS and EDGE multislot classes (if GPRS and EDGE are supported).

The new configuration cannot be applied if the module is registered on the network for PS services: in this case, before changing the multislot class, the user must first trigger a GPRS detach (e.g. via AT+COPS=2 or AT+CGATT=0); the new multislot class is used starting from the successive GPRS attach. The new multislot classes are also stored to NVM and used at the next module power on.

☞ u-blox cellular modules are certified according to all the capabilities and options stated in the Protocol Implementation Conformance Statement document (PICS) of the module. The PICS, according to 3GPP TS 51.010-2 [84], 3GPP TS 34.121-2 [85], 3GPP TS 36.521-2 [115] and 3GPP TS 36.523-2 [116], is a statement of the implemented and supported capabilities and options of a device. If the user changes the command settings during the certification process, the PICS of the application device integrating a u-blox cellular module must be changed accordingly.

☞ If <ms_class_GPRS>=0 the default values are set for all the parameters, regardless of the other parameter settings.

18.25.2 Syntax

Type	Syntax	Response	Example
Set	AT+UCLASS=<ms_class_GPRS>[,<ms_class_EGPRS>[,<ms_class_DTM_GPRS>[,<ms_class_DTM_EGPRS>]]]	OK	AT+UCLASS=10 OK
Read	AT+UCLASS?	+UCLASS: <ms_class_GPRS>[,<ms_class_EGPRS>[,<ms_class_DTM_GPRS>[,<ms_class_DTM_EGPRS>]]] OK	+UCLASS: 12,12,11,11 OK
Test	AT+UCLASS=?	+UCLASS: (list of supported <ms_class_GPRS>s)[,(list of supported <ms_class_EGPRS>s)[,(list of supported <ms_class_DTM_GPRS>s)[,(list of supported <ms_class_DTM_EGPRS>s)]]] OK	+UCLASS: (0-12),(0-12),(0-11),(0-11) OK

18.25.3 Defined values

Parameter	Type	Description
<ms_class_GPRS>	Number	GPRS multislot class defined according to 3GPP TS 05.02 [42]: • TOBY-L2 / MPCI-L2 - The allowed values are 0, 10 and 12. The factory-programmed value is 12 • LARA-R2 / TOBY-R2 - The allowed range is 1-12, 30-33, 35-38. The factory-programmed value is 33 • SARA-U2 / LISA-U2 / LISA-U1 - The allowed range is 0-12. The factory-programmed value is 12 • LISA-U200-00S - The allowed range is 0-33. The factory-programmed value is 12 • SARA-G3 / LEON-G1 - The allowed range is 0-10. The factory-programmed value is 10 • SARA-G4 - The allowed range is 0-12. The factory-programmed value is 12
<ms_class_EGPRS>	Number	EGPRS multislot class defined according to 3GPP TS 05.02 [42]. The default value is the value set in <ms_class_GPRS>. • TOBY-L2 / MPCI-L2 - The allowed values are 0, 10 and 12. The factory-programmed value is 12 • LARA-R2 / TOBY-R2 - The allowed range is 1-12, 30-33, 35-38. The factory-programmed value is 33 • SARA-U2 / LISA-U2 / LISA-U1 - The allowed range is 0-12. The factory-programmed value is 12 • LISA-U200-00S - The allowed range is 0-33. The factory-programmed value is 12 • SARA-G4 / SARA-G3 / LEON-G1 - Not supported
<ms_class_DTM_GPRS>	Number	DTM GPRS multislot class defined according to 3GPP TS 05.02 [42]. Default value is the value set in <ms_class_GPRS>. • LARA-R202 / LARA-R203 / LARA-R204 / LARA-R220 / LARA-R280 / TOBY-R2 - The allowed range is 0, 5, 9, 11, 31-33, 36-38. The factory-programmed value is 33 • LARA-R211 - The allowed range is 0, 5, 9, 11, 31-33, 36-38. The factory-programmed value is 0 • SARA-U2 / LISA-U2 - The allowed range is 0-11. The factory-programmed value is 11 • TOBY-L2 / MPCI-L2 / LISA-U200-00S / LISA-U1 / SARA-G4 / SARA-G3 / LEON-G1 - Not supported
<ms_class_DTM_EGPRS>	Number	DTM EGPRS multislot class defined according to 3GPP TS 05.02 [42]. The default value is the value set in <ms_class_GPRS>. • LARA-R202 / LARA-R203 / LARA-R204 / LARA-R220 / LARA-R280 / TOBY-R2 - The allowed range is 0, 5, 9, 11, 31-33, 36-38. The factory-programmed value is 33 • LARA-R211 - The allowed range is 0, 5, 9, 11, 31-33, 36-38. The factory-programmed value is 0 • SARA-U2 / LISA-U2 - The allowed range is 0-11. The factory-programmed value is 11 • TOBY-L2 / MPCI-L2 / LISA-U200-00S / LISA-U1 / SARA-G4 / SARA-G3 / LEON-G1 - Not supported

18.25.4 Notes

- In the set command <ms_class_GPRS>=0 is used to set the maximum supported values.
- The GPRS, EGPRS, DTM GPRS and DTM EGPRS multislot classes cannot be independently chosen (some configurations are not valid and an error result code is reported: "+CME ERROR: operation not supported" if +CMEE is set to 2). See the following tables:

Type	Valid values	Maximum value	Default value
E/GPRS	(1-12)	12	12
DTM E/GPRS	5, 9,11	11	11

Table 26: Multislot classes: valid, maximum and default values for each type

GPRS multislot class	EGPRS multislot class valid values
(1-12)	(1-12)
30	30, 32, 33
31	31
32	30, 32, 33
33	30, 32, 33

Table 27: EGPRS multislot classes valid values relative to the selected GPRS multislot class

DTM EGPRS/GPRS multislot class	EGPRS/GPRS multislot class valid values
5	(1-12)
9	(1-12)
11	(1-12)

Table 28: EGPRS/GPRS multislot classes valid values relative to the selected DTM EGPRS/GPRS multislot class

TOBY-L2 / MPCI-L2

- The <ms_class_GPRS>=0 command sets the maximum allowed values.

LISA-U1

- The <ms_class_EGPRS> parameter in the set command is mandatory.
- If <ms_class_GPRS>=0 the default values are not set for all the parameters.

LISA-U200-00S

- If <ms_class_GPRS>=0 the maximum supported values are set for all parameters, regardless of the second parameter's settings.
- If <ms_class_GPRS>=0 the default values are not set for all the parameters.

SARA-G4 / SARA-G3 / LEON-G1

- <ms_class_GPRS>=7 is not allowed.
- If <ms_class_GPRS>=0 the default values are not set for all the parameters.

18.26 GPRS event reporting +CGEREP

+CGEREP						
Modules	All products					
Attributes	Syntax	PIN required	Settings saved	Can be aborted	Response time	Error reference
	partial	Yes	No	No	-	+CME Error

18.26.1 Description

Configures sending of URCs from MT to the DTE, in case of certain events occurring during GPRS signalling between the MT and the network.

18.26.2 Syntax

Type	Syntax	Response	Example
Set	AT+CGEREP=[<mode>[,<bfr>]]	OK	AT+CGEREP=1,1

Type	Syntax	Response	Example
			OK
Read	AT+CGEREP?	+CGEREP: <mode>,<bfr> OK	+CGEREP: 0,0 OK
Test	AT+CGEREP=?	+CGEREP: (list of supported <mode>s),(list of supported <bfr>s) OK	+CGEREP: (0-2),(0-1) OK
URC		+CGEV: ME PDN ACT <cid>[,<reason>[,<cid_other>]]	+CGEV: NW CLASS "CC"
		+CGEV: ME ACT <p_cid>,<cid>,<event_type>	
		+CGEV: ME PDN DEACT <cid>	
		+CGEV: ME DEACT <PDP_type>,<PDP_addr>,[<cid>]	
		+CGEV: ME DEACT,<p_cid>,<cid>,0	
		+CGEV: ME DEACT <p_cid>,<cid>,<event_type>	
		+CGEV: ME MODIFY <cid>,<change_reason>,<event_type>	
		+CGEV: ME DETACH	
		+CGEV: ME CLASS <class>	
		+CGEV: NW PDN ACT <cid>[,<reason>]	
		+CGEV: NW ACT <p_cid>,<cid>,<event_type>	
		+CGEV: NW PDN DEACT <cid>	
		+CGEV: NW DEACT <p_cid>,<cid>,0	
		+CGEV: NW DEACT <p_cid>,<cid>,<event_type>	
		+CGEV: NW DEACT <PDP_type>,<PDP_addr>,[<cid>]	
		+CGEV: NW MODIFY <cid>,<change_reason>,<event_type>	
		+CGEV: NW DETACH	
		+CGEV: NW CLASS <class>	
		+CGEV: VZW_SUBS_ACTION_NORMAL (0) - No restriction to data traffic	

18.26.3 Defined values

Parameter	Type	Description
<mode>	Number	Controls the processing of URCs specified within this command. Allowed values: • 0 (default value): buffer URCs in the MT; if the buffer is full the oldest ones will be discarded • 1: discard URCs when V.24 link is reserved (online); otherwise forward them directly to the DTE • 2: buffer URCs in the MT when link reserved (online) and flush them to the DTE when the link becomes available; otherwise forward them directly to the DTE
<bfr>	Number	Controls the effect on buffered codes when <mode> 1 or 2 is entered. Allowed values: • 0 (default value): MT buffer of URCs defined within this command is cleared when <mode> 1 or 2 is entered • 1: MT buffer of URCs defined within this command is flushed to the DTE when <mode> 1 or 2 is entered (OK is given before flushing the codes)
<cid>	Number	See <cid>
<reason>	Number	Indicates whether the reason why the context activation request for PDP type IPv4v6 was not granted: • 0: IPv4 only allowed • 1: IPv6 only allowed • 2: single address bearers only allowed

Parameter	Type	Description
		• 3: single address bearers only allowed and MT initiated context activation for a second address type bearer was not successful
<cid_other>	Number	Indicates whether the context identifier allocated by MT for an MT initiated context of a second address type
<p_cid>	Number	Numeric parameter that identifies the particular PDP context definition, specified using +CGDCONT, to which a secondary PDP context definition will be associated using +CGDSCONT. This parameter is only locally valid on the interface TE-MT.
<event_type>	Number	Indicates whether the event is informational or whether the TE has to acknowledge it: • 0: informational event • 1: information request: acknowledgement required
<change_reason>	Number	Indicates what kind of change occurred: • 1: TFT only changed • 2: QoS only changed • 3: both TFT and QoS changed
<PDP_type>	Number	See <PDP_type>
<PDP_addr>	Number	See <PDP_addr>
<class>	String	GPRS mobile class. Allowed values: • "A": class A mode of operation (A/Gb mode), or CS/PS mode of operation (Iu mode) (highest mode of operation) • "B": class B (circuit-switched and packet-switched data alternatively supported) • "CG": class C (one service only) in GPRS mode • "CC": class C (one service only) in circuit-switched (GSM) mode

18.26.4 Notes

TOBY-L4

- The detach indication shall be used also for local deactivation of any PDP context/EPS bearer.

TOBY-L2 / MPCI-L2

- The PIN insertion is not mandatory.
- <class>= "A" is not supported.
- It is possible to issue the command without "=".

SARA-G4 / SARA-G3 / LEON-G1

- <class>= "A" is not supported.

18.26.5 Explanation of URCs

URC	Remarks
+CGEV: ME PDN ACT <cid>[,<reason>[,<cid_other>]]	The MT has activated a primary context. ☞ SARA-U2 / LISA-U2 / LISA-U1 / SARA-G4 / SARA-G3 / LEON-G1 Not supported.
+CGEV: ME ACT <p_cid>,<cid>,<event_type>	The network has responded to a MT initiated secondary context activation. ☞ SARA-U2 / LISA-U2 / LISA-U1 / SARA-G4 / SARA-G3 / LEON-G1 Not supported.
+CGEV: ME PDN DEACT <cid>	The MT has forced a primary context deactivation. ☞ SARA-U2 / LISA-U2 / LISA-U1 / SARA-G4 / SARA-G3 / LEON-G1 Not supported.
+CGEV: ME DEACT <PDP_type>,<PDP_addr>,[<cid>]	The MT has forced a context deactivation. ☞ TOBY-L2 / MPCI-L2 Not supported.
+CGEV: ME DEACT,<p_cid>,<cid>,0	The UE has forced a secondary context deactivation. ☞ TOBY-L2 / MPCI-L2 / SARA-U2 / LISA-U2 / LISA-U1 / SARA-G4 / SARA-G3 / LEON-G1 Not supported.

URC	Remarks
+CGEV: ME DEACT <p_cid>,<cid>,<event_type>	The MT has forced a secondary context deactivation. ☞ SARA-U2 / LISA-U2 / LISA-U1 / SARA-G4 / SARA-G3 / LEON-G1 Not supported.
+CGEV: ME MODIFY <cid>,<change_reason>,<event_type>	The MT has forced a context modification. ☞ SARA-U2 / LISA-U2 / LISA-U1 / SARA-G4 / SARA-G3 / LEON-G1 Not supported.
+CGEV: ME DETACH	The mobile station has forced a GPRS detach
+CGEV: ME CLASS <class>	The mobile station has forced a change of MT class; the highest available class is reported
+CGEV: NW PDN ACT <cid>[,<reason>]	The network has activated a primary context. ☞ TOBY-L2 / MPCI-L2 / SARA-U2 / LISA-U2 / LISA-U1 / SARA-G4 / SARA-G3 / LEON-G1 Not supported.
+CGEV: NW ACT <p_cid>,<cid>,<event_type>	The network has forced a secondary context activation. ☞ SARA-U2 / LISA-U2 / LISA-U1 / SARA-G4 / SARA-G3 / LEON-G1 Not supported.
+CGEV: NW PDN DEACT <cid>	The network has forced a primary context deactivation. ☞ SARA-U2 / LISA-U2 / LISA-U1 / SARA-G4 / SARA-G3 / LEON-G1 Not supported.
+CGEV: NW DEACT <p_cid>,<cid>,0	The network has forced a secondary context deactivation. ☞ TOBY-L2 / MPCI-L2 / SARA-U2 / LISA-U2 / LISA-U1 / SARA-G4 / SARA-G3 / LEON-G1 Not supported.
+CGEV: NW DEACT <p_cid>,<cid>,<event_type>	The network has forced a secondary context deactivation. ☞ LARA-R2 / TOBY-R2 / SARA-U2 / LISA-U2 / LISA-U1 / SARA-G4 / SARA-G3 / LEON-G1 Not supported.
+CGEV: NW DEACT <PDP_type>,<PDP_addr>,[<cid>]	The network has forced a context deactivation. ☞ TOBY-L2 / MPCI-L2 / LARA-R2 / TOBY-R2 Not supported.
+CGEV: NW MODIFY <cid>,<change_reason>,<event_type>	The network has forced a context modification. ☞ SARA-U2 / LISA-U2 / LISA-U1 / SARA-G4 / SARA-G3 / LEON-G1 Not supported.
+CGEV: NW DETACH	The network has forced a GPRS detach
+CGEV: NW CLASS <class>	The network has forced a change of MT class (e.g. due to service detach); the highest available class is reported
+CGEV: VZW_SUBS_ACTION_NORMAL (0) - No restriction to data traffic	No restriction to data traffic. The URC is provided only on Verizon network. ☞ TOBY-L200 / TOBY-L210 / TOBY-L220 / TOBY-L280 / MPCI-L200 / MPCI-L210 / MPCI-L220 / MPCI-L280 / LARA-R2 / TOBY-R2 / SARA-U2 / LISA-U2 / LISA-U1 / SARA-G4 / SARA-G3 / LEON-G1 Not supported.

18.27 GPRS network registration status +CGREG

+CGREG						
Modules	TOBY-L4 TOBY-L200 TOBY-L201 TOBY-L210 TOBY-L220-02S TOBY-L280 MPCI-L200 MPCI-L201 MPCI-L210 MPCI-L220-02S MPCI-L280					
	LARA-R2 TOBY-R2					
	SARA-U2 LISA-U2 LISA-U1					
	SARA-G4 SARA-G3 LEON-G1					
Attributes	**Syntax**	**PIN required**	**Settings saved**	**Can be aborted**	**Response time**	**Error reference**
	partial	No	No	No	-	+CME Error

18.27.1 Description

Configures the GPRS network registration information. Depending on the <n> parameter value, a URC can be issued:

- +CGREG: <stat> if <n>=1 and there is a change in the GPRS network registration status in GERAN/UTRAN
- +CGREG: <stat>[,<lac>,<ci>[,<AcT>,<rac>]] if <n>=2 and there is a change of the network cell in GERAN/UTRAN

The parameters <lac>, <ci>, <AcT>, <rac> are provided only if available.

The read command provides the same information issued by the URC together with the current value of the <n> parameter. The location information elements <lac>, <ci> and <AcT>, if available, are returned only when <n>=2 and the MT is registered with the network.

☞ When <n>=2, in UMTS RAT, unsolicited location information can be received if the network sends the UTRAN INFORMATION MOBILITY message during dedicated connections; in the latter cases the reported <ci> might be not correct because the UE in DCH state cannot read broadcast system information before the change of serving cell. In contrast, in GSM RAT no unsolicited location information is received during a CS connection.

☞ If the GPRS MT also supports circuit mode services in GERAN/UTRAN and/or EPS services in E-UTRAN, the +CREG / +CEREG commands return the registration status and location information for those services.

18.27.2 Syntax

Type	Syntax	Response	Example
Set	AT+CGREG=[<n>]	OK	AT+CGREG=1 OK
Read	AT+CGREG?	If <n>=0 or 1: +CGREG: <n>,<stat> OK	+CGREG: 0,4 OK
		If <n>=2: +CGREG: <n>,<stat>[,<lac>,<ci>[,<AcT>,<rac>]] OK	+CGREG: 2,1,"61EF","7D58A3",2,"14" OK
Test	AT+CGREG=?	+CGREG: (list of supported <n>s) OK	+CGREG: (0-2) OK
URC		If <n>=1: +CGREG: <stat>	+CGREG: 1
		If <n>=2: +CGREG: <stat>[,<lac>,<ci>[,<AcT>,<rac>]]	+CGREG: 1,"4E54","44A5"

18.27.3 Defined values

Parameter	Type	Description
<n>	Number	• 0 (default value and factory-programmed value): network registration URC disabled • 1: network registration URC enabled

Parameter	Type	Description
		• 2: network registration and location information URC enabled
<stat>	Number	• 0: not registered, the MT is not currently searching an operator to register to • 1: registered, home network • 2: not registered, but MT is currently searching a new operator to register to • 3: registration denied • 4: unknown (e.g. out of GERAN/UTRAN coverage) • 5: registered, roaming • 8: attached for emergency bearer services only (see 3GPP TS 24.008 [12] and 3GPP TS 24.301 [88] that specify the condition when the MS is considered as attached for emergency bearer services) (applicable only when <AcT> indicates 2,4,5,6)
<lac>	String	Two bytes location area in hexadecimal format; it is optionally provided in the URC and in the response to the read command if <n>=2. The value FFFF means that the current <lac> value is invalid.
<ci>	String	From 2 to 4 bytes cell ID in hexadecimal format; it is optionally provided in the URC and in the response to the read command if <n>=2. The value FFFFFFFF means that the current <ci> value is invalid.
<AcT>	Number	Indicates the radio access technology: • 0: GSM • 1: GSM COMPACT • 2: UTRAN • 3: GSM with EDGE availability • 4: UTRAN with HSDPA availability • 5: UTRAN with HSUPA availability • 6: UTRAN with HSDPA and HSUPA availability • 255: the current <AcT> value is invalid
<rac>	String	One byte routing area in hexadecimal format

18.27.4 Notes

- The DTE application should set a reasonable timer (10 s) when receiving the +CGREG: 3 URC, since this might be due to the fact that the LTE registration was rejected (SIM not enabled for LTE RAT, wrong APN during the initial default bearer set-up in the EPS attach procedure and other temporary reject causes).

TOBY-L4

- The URC does not notify access technology information changes that might change in polling; see the +UREG AT command to monitor the RAT changes.

TOBY-L2 / MPCI-L2

- The information text response to the read command and the URC will assume these values in these conditions:
  - During the initial network searching at the module power-on, the <stat> parameter is 2
  - If the module is PS attached to the GSM/UMTS home network, the <stat> parameter is 1
  - If the module is registered to E-UTRAN, the <stat> parameter is 4
  - In out of coverage state, the <stat> parameter is 4
- <stat>= 8 is not supported.

LISA-U1

- <AcT> and <rac> parameters are not supported.

SARA-G4 / SARA-G3 / LEON-G1

- If GPRS is enabled and +CREG and +CGREG URCs are both enabled too, once the module is registered and attached then the two URCs are sent out quite at the same time.
- <AcT> and <rac> parameters are not supported.

SARA-G300 / SARA-G310 / SARA-G340-00S / SARA-G340-01S / SARA-G350-00S / SARA-G350-00X / SARA-G350-01B / SARA-G350-01S / LEON-G1

- Equivalent HPLMN for <stat>=1 is not supported: <stat>=5 is indicated in this case.

18.28 Extended Packet Switched network registration status +UREG

+UREG						
Modules	TOBY-L4 TOBY-L2 MPCI-L2					
	LARA-R2 TOBY-R2					
	SARA-U2 LISA-U2 LISA-U1					
Attributes	**Syntax**	**PIN required**	**Settings saved**	**Can be aborted**	**Response time**	**Error reference**
	partial	No	No	No	-	+CME Error

18.28.1 Description

Reports the network or the device PS (Packet Switched) radio capabilities.

When the device is not in connected mode, the command reports the network PS (Packet Switched) radio capabilities of the PLMN where the device is attached to.

When the device is in connected mode, the command reports the PS radio capabilities the device has been configured.

The set command enables / disables the URC **+UREG**, generated whenever it is enabled and the capabilities change.

The read command can be used to query the current PS radio capabilities.

18.28.2 Syntax

Type	Syntax	Response	Example
Set	AT+UREG=<n>	OK	AT+UREG=1 OK
Read	AT+UREG?	+UREG: <n>,<state> OK	+UREG: 0,3 OK
Test	AT+UREG=?	+UREG: (list of supported <n>'s) OK	+UREG: (0-1) OK
URC		+UREG: <state>	+UREG: 3

18.28.3 Defined values

Parameter	Type	Description
<n>	Number	• 0: network registration attach status URC disabled • 1: network registration attach status URC +UREG enabled
<state>	Number	• 0: not registered for PS service • 1: registered for PS service, RAT=2G, GPRS available • 2: registered for PS service, RAT=2G, EDGE available • 3: registered for PS service, RAT=3G, WCDMA available • 4: registered for PS service, RAT=3G, HSDPA available • 5: registered for PS service, RAT=3G, HSUPA available • 6: registered for PS service, RAT=3G, HSDPA and HSUPA available • 7: registered for PS service, RAT=4G • 8: registered for PS service, RAT=2G, GPRS available, DTM available • 9: registered for PS service, RAT=2G, EDGE available, DTM available

18.28.4 Notes

TOBY-L2 / MPCI-L2

- <state>= 8 and 9 are not supported.
- The information text response to the read command and the URC will assume these values in these conditions:
  - During the initial network searching at the module power on the <state> parameter is 0
  - If the module is registered to E-UTRAN the <state> parameter is 7

- In the out of coverage state the <state> parameter is 0

LISA-U200-00S / LISA-U1

- <state>= 8 and 9 are not supported.

18.29 Manual deactivation of a PDP context H

H						
Modules	TOBY-L4 TOBY-L200 TOBY-L201 TOBY-L210 TOBY-L220-02S TOBY-L280 MPCI-L200 MPCI-L201 MPCI-L210 MPCI-L220-02S MPCI-L280					
	LARA-R2 TOBY-R2					
	SARA-U2 LISA-U2 LISA-U1					
	SARA-G3 LEON-G1					
Attributes	**Syntax**	**PIN required**	**Settings saved**	**Can be aborted**	**Response time**	**Error reference**
	full	No	No	No	< 20 s	-

18.29.1 Description

This command H (On-hook) deactivates a pending PDP context with PPP L2 protocol in online command mode. The MT responds with OK. See Chapter 6.7 for a detailed description.

☞ In GPRS online command mode, entered by typing the escape sequence "+++" or "~+++" (see Chapter 15.3.4), the ATH command is needed to terminate the connection. Alternatively, in data transfer mode, DTE originated DTR toggling or PPP disconnection may be used.

18.29.2 Syntax

Type	Syntax	Response	Example
Action	ATH	OK	

18.30 PDP context modify +CGCMOD

+CGCMOD						
Modules	TOBY-L4 TOBY-L2 MPCI-L2					
	LARA-R2 TOBY-R2					
	SARA-U2 LISA-U2 LISA-U1					
Attributes	**Syntax**	**PIN required**	**Settings saved**	**Can be aborted**	**Response time**	**Error reference**
	partial	Yes	No	No	Up to 40 s	+CME Error

18.30.1 Description

This execution command is used to modify the specified PDP context(s) with respect to QoS profiles and TFT's. After the command is complete, the MT returns to the V.25 online data state. If the requested modification for any specified context cannot be achieved, an error result code is returned. If no <cid>s are specified, the activation form of the command modifies all the active contexts.

18.30.2 Syntax

Type	Syntax	Response	Example
Set	AT+CGCMOD=[<cid>[,<cid>[,,...]]]	OK	AT+CGCMOD=1 OK
Test	AT+CGCMOD=?	+CGCMOD: (list of <cid>s with active contexts) OK	

18.30.3 Defined values

Parameter	Type	Description
<cid>	Number	See <cid>.

18.30.4 Notes

TOBY-L4

- The information text response to the test command lists all the defined <cid> contexts.

TOBY-L2 / MPCI-L2

- When changing the QoS of a dedicated EPS/secondary PDP context, TFT settings shall be re-enforced via +CGTFT before issuing the +CGCMOD AT command.

18.31 3G Quality of service profile (requested) +CGEQREQ

+CGEQREQ						
Modules	TOBY-L4 TOBY-L2 MPCI-L2					
	LARA-R2 TOBY-R2					
	SARA-U2 LISA-U2 LISA-U1					
Attributes	**Syntax**	**PIN required**	**Settings saved**	**Can be aborted**	**Response time**	**Error reference**
	partial	Yes	No	No	-	+CME Error

18.31.1 Description

Allows the TE to specify the QoS profile that is used when the MT sends an Activate PDP Context Request message to the network. The set command specifies a profile for the context identified by the <cid>. The specified profile will be stored in the MT and sent to the network only at activation or MS-initiated modification of the related context. The command is actually an extension of the commands +CGDCONT and +CGDSCONT. The QoS profile consists of a number of parameters, each of which may be set to a separate value. The special form +CGEQREQ=<cid> causes the requested profile related to <cid> to become undefined.

☞ The command defines a PDP context having a <PDP_type> set to "IP", <apn> set to "" and with the specified <cid>, if a PDP context with the specified <cid> was not already defined by +CGDCONT AT command.

☞ TOBY-L4 / TOBY-L2 / MPCI-L2
After the PDP context activation, the information text response to the read command provides the configuration negotiated with the network (similarly to +CGTFTRDP and +CGCONTRDP AT commands).

18.31.2 Syntax

Type	Syntax	Response	Example
Set	AT+CGEQREQ=[<cid>[,<Traffic_class>[,<Maximum_bitrate_UL>[,<Maximum_bitrate_DL>[,<Guaranteed_bitrate_UL>[,<Guaranteed_bitrate_DL>[,<Delivery_order>[,<Maximum_SDU_size>[,<SDU_error_ratio>[,<Residual_bit_error_ratio>[,<Delivery_of_erroneous_SDUs>[,<Transfer_delay>[,<Traffic_handling_priority> [,<Source_statistics_descriptor> [,<Signalling_indication>]]]]]]]]]]]]]]	OK	AT+CGEQREQ=1,2,64,64,,,0,320,"1E4","1E5",1,,3,0,0 OK
Read	AT+CGEQREQ?	+CGEQREQ: <cid>,<Traffic_class>,<Maximum_bitrate_UL>,<Maximum_bitrate_DL>,<Guaranteed_bitrate_UL>,<Guaranteed_bitrate_DL>,<Delivery_order>,<Maximum_SDU_size>,<SDU_error_ratio>,<Residual_bit_error_ratio>,<Delivery_of_erroneous_SDUs>,<Transfer_delay>,<Traffic_handling_priority>,<Source_statistics_descriptor>,<Signalling_indication>	+CGEQREQ: 1,2,5760,5760,0,0,0,1500,"1E4","1E5",0,1000,1,0,0 OK

Type	Syntax	Response	Example
		[+CGEQREQ: <cid>,<Traffic_class>,<Maximum_bitrate_UL>,<Maximum_bitrate_DL>,<Guaranteed_bitrate_UL>,<Guaranteed_bitrate_DL>,<Delivery_order>,<Maximum_SDU_size>,<SDU_error_ratio>,<Residual_bit_error_ratio>,<Delivery_of_erroneous_SDUs>,<Transfer_delay>,<Traffic_handling_priority>,<Source_statistics_descriptor>,<Signalling_indication> [...]] OK	
Test	AT+CGEQREQ=?	+CGEQREQ: <PDP_type>,(list of supported <Traffic_class>s),(list of supported <Maximum_bitrate_UL>s),(list of supported <Maximum_bitrate_DL>s),(list of supported <Guaranteed_bitrate_UL>s),(list of supported <Guaranteed_bitrate_DL>s),(list of supported <Delivery_order>s),(list of supported <Maximum_SDU size>s),(list of supported <SDU_error_ratio>s),(list of supported <Residual_bit_error_ratio>s),(list of supported <Delivery_of_erroneous_SDUs>s),(list of supported <Transfer_delay>s),(list of supported <Traffic_handling_priority>s) [+CGEQREQ: <PDP_type>,(list of supported <Traffic_class>s),(list of supported <Maximum_bitrate_UL>s),(list of supported <Maximum_bitrate_DL>s),(list of supported <Guaranteed_bitrate_UL>s),(list of supported <Guaranteed_bitrate_DL>s),(list of supported <Delivery_order>s),(list of supported <Maximum_SDU_size>s),(list of supported <SDU_error_ratio>s),(list of supported <Residual_bit_error_ratio>s),(list of supported <Delivery_of_erroneous_SDUs>s),(list of supported <Transfer_delay>s),(list of supported <Traffic_handling_priority>s),(list of supported <Source_statistics_descriptor>s),(list of supported <Signalling_indication>s) [...]] OK	+CGEQREQ: "IP",(0-4),(1-63 in 1 kbps steps, 64-568 in 8 kbps steps, 576-8640 in 64 kbps steps),(1-63 in 1 kbps steps, 64-568 in 8 kbps steps, 576-8640 in 64 kbps steps, 8700-16000 in 100 kbps steps),(1-63 in 1 kbps steps, 64-568 in 8 kbps steps, 576-8640 in 64 kbps steps),(1-63 in 1 kbps steps, 64-568 in 8 kbps steps, 576-8640 in 64 kbps steps, 8700-16000 in 100 kbps steps),(0-1),(10-1500,1502,1510,1520),("1E6","1E5","1E4","1E3","7E3","1E2","1E1"),("6E8","1E6","1E5","1E4","5E3","4E3","1E3","5E2","1E2"),(0-2),(10-150 in 10 ms steps, 200-950 in 50 ms steps, 100 0-4000 in 50 ms steps),(0-3),(0-1),(0-1) OK

18.31.3 Defined values

Parameter	Type	Description
<cid>	Number	See <cid>
<PDP_type>	String	See <PDP_type>
<Traffic_class>	Number	Indicates the application type for which the UMTS bearer service is optimized (see the 3GPP TS 24.008 [12], subclause 10.5.6.5): • 0: conversational • 1: streaming

Parameter	Type	Description
		• 2: interactive • 3: background • 4: subscribed value
<Maximum_bitrate_UL>	Number	Indicates the maximum number of kb/s delivered to UMTS (up-link traffic) at an application processor (see the 3GPP TS 24.008 [12], subclause 10.5.6.5): • Range 1-63 in steps of 1 • Range 64-568 in steps of 8 • Range 576-8640 in steps of 64 • Range 8700-16000 in steps of 100 • Range 17000-128000 in steps of 1000 • Range 130000-256000 in steps of 2000
<Maximum_bitrate_DL>	Number	Indicates the maximum number of kb/s delivered by UMTS (down-link traffic) at an application processor (see the 3GPP TS 24.008 [12], subclause 10.5.6.5): • Range 1-63 in steps of 1 • Range 64-568 in steps of 8 • Range 576-8640 in steps of 64 • Range 8700-16000 in steps of 100 • Range 17000-128000 in steps of 1000 • Range 130000-256000 in steps of 2000
<Guaranteed_bitrate_UL>	Number	Indicates the guaranteed number of kb/s delivered to UMTS (up-link traffic) at an application processor (see the 3GPP TS 24.008 [12], subclause 10.5.6.5): • Range 1-63 in steps of 1 • Range 64-568 in steps of 8 • Range 576-8640 in steps of 64 • Range 8700-16000 in steps of 100 • Range 17000-128000 in steps of 1000 • Range 130000-256000 in steps of 2000
<Guaranteed_bitrate_DL>	Number	Indicates the guaranteed number of kb/s delivered by UMTS (down-link traffic) at an application processor (see the 3GPP TS 24.008 [12], subclause 10 .5.6.5): • Range 1-63 in steps of 1 • Range 64-568 in steps of 8 • Range 576-8640 in steps of 64 • Range 8700-16000 in steps of 100 • Range 17000-128000 in steps of 1000 • Range 130000-256000 in steps of 2000
<Delivery_order>	Number	Indicates whether the UMTS bearer shall provide in-sequence SDU (Service Data Unit) delivery or not (see the 3GPP TS 24.008 [12], subclause 10.5.6.5): • 0: no • 1: yes • 2: subscribed value
<Maximum_SDU_size>	Number	Indicates the maximum allowed SDU (Service Data Unit) size in octets (see the 3GPP TS 24.008 [12], subclause 10.5.6.5): • 0: subscribed value • Range 10-1500 in steps of 10 octets • 1502 • 1510 • 1520
<SDU_error_ratio>	String	Indicates the target value for the fraction of SDUs (Service Data Unit) lost or detected as erroneous. SDU error ratio is defined only for conforming traffic (see the 3GPP TS 24.008 [12], subclause 10.5.6.5). The value is specified as 'mEe', e.g. a target SDU error ratio of $1*10^{-6}$ would be specified as '1E6': • "1E6": $1*10^{-6}$ • "1E5": $1*10^{-5}$ • "1E4": $1*10^{-4}$ • "1E3": $1*10^{-3}$ • "7E3": $7*10^{-3}$ • "1E2": $1*10^{-2}$

Parameter	Type	Description
		• "1E1": $1*10^{-1}$ • "0E0": subscribed value
<Residual_bit_error_ratio>	String	Indicates the target value for the undetected bit error ratio in the delivered SDUs (Service Data Unit). If no error detection is requested, the parameter indicates the bit error ratio in the delivered SDUs (see the 3GPP TS 24.008 [12], subclause 10.5.6.5). The value is specified as 'mEe', e.g. a target SDU error ratio of $5*10^{-2}$ would be specified as '5E2': • "6E8": $6*10^{-8}$ • "1E6": $1*10^{-6}$ • "1E5": $1*10^{-5}$ • "1E4": $1*10^{-4}$ • "5E3": $5*10^{-3}$ • "4E3": $4*10^{-3}$ • "1E3": $1*10^{-3}$ • "5E2": $5*10^{-2}$ • "1E2": $1*10^{-2}$ • "0E0": subscribed value
<Delivery_of_erroneous_SDUs>	Number	Indicates whether SDUs (Service Data Unit) detected as erroneous shall be delivered or not (see the 3GPP TS 24.008 [12], subclause 10.5.6.5): • 0: no • 1: yes • 2: no detect • 3 (default value): subscribed value
<Transfer_delay>	Number	Indicates the target time, in milliseconds, between a request to transfer an SDU (Service Data Unit) at an application processor and its delivery at the other application processor (see the 3GPP TS 24.008 [12], subclause 10.5.6.5): • Range 10-150 in steps of 10 • Range 200-950 in steps of 50 • Range 1000-4000 in steps of 100
<Traffic_handling_priority>	Number	Specifies the relative importance for handling of all SDUs (Service Data Unit) belonging to the UMTS bearer compared to the SDUs of other bearers (see the 3GPP TS 24.008 [12], subclause 10.5.6.5): • 0: subscribed • 1: priority level 1 • 2: priority level 2 • 3: priority level 3
<Source_statistics_descriptor>	Number	Specifies the characteristics of the source of the submitted SDUs for a PDP context: • 0 (default value): characteristics of the SDUs unknown • 1: characteristics of the SDUs correspond to a speech source
<Signalling_indication>	Number	Specifies signaling content of submitted SDUs for a PDP context: • 0 (default value): PDP context is not optimized for signalling • 1: PDP context is optimized for signalling <PDP_type>

18.31.4 Notes

- If <Maximum_bitrate_UL>, <Maximum bitrate DL>, <Guaranteed_bitrate_UL>, <Guaranteed_bitrate_DL>, <Maximum_SDU_size> and <Transfer_delay> parameters are set outside the allowed range, an error message will be provided. If the value is selected within the allowed range, it is rounded to the closest allowed value according to the specified steps.
- If <Traffic_class>=0 (conversational) or <Traffic_class>=1 (streaming), <Maximum_bitrate_UL>, <Maximum_bitrate_DL>, <Guaranteed_bitrate_UL> and <Guaranteed_bitrate_DL> must be provided.
- If <Traffic_class>=0 (conversational) or <Traffic_class>=1 (streaming), <Source_statistics_descriptor> must be provided.
- If <Traffic_class>=2 (interactive), <Signalling_indication> must be provided.

TOBY-L4

- <Traffic_class>=4, <Delivery_of_erroneous_SDUs>=3, <Delivery_order>=2 are not supported.

LISA-U1

- <Source_statistics_descriptor> and <Signalling_indication> are not supported.

18.32 3G Quality of service profile (minimum acceptable) +CGEQMIN

+CGEQMIN						
Modules	TOBY-L4 TOBY-L2 MPCI-L2					
	LARA-R2 TOBY-R2					
	SARA-U2 LISA-U2 LISA-U1					
Attributes	**Syntax**	**PIN required**	**Settings saved**	**Can be aborted**	**Response time**	**Error reference**
	full	Yes	No	No	-	+CME Error

18.32.1 Description

This command allows the TE to specifiy a minimum acceptable profile, which is checked by the MT against the negotiated profile returned in the Activate/Modify PDP Context Accept message. The set command specifies a profile for the context identified by the <cid>. The specified profile will be stored in the MT and checked against the negotiated profile only at activation or MS initiated modification of the related context. This command is actually an extension to the commands +CGDSCONT and +CGDCONT. The special form of this command +CGEQMIN=<cid> causes the minimum acceptable profile for context number <cid> to become undefined. No check is made against the negotiated profile.

☞ The command defines a PDP context having <PDP_type> set to "IP", <apn> set to "" and with the specified <cid>, if a PDP context with the specified <cid> was not already defined by +CGDCONT AT command.

18.32.2 Syntax

Type	Syntax	Response	Example
Set	AT+CGEQMIN=[<cid>[,<Traffic_class>[,<Maximum_bitrate_UL>[,<Maximum_bitrate_DL>[,<Guaranteed_bitrate_UL>[,<Guaranteed_bitrate_DL>[,<Delivery_order>[,<Maximum_SDU_size>[,<SDU_error_ratio>[,<Residual_bit_error_ratio>[,<Delivery_of_erroneous_SDUs>[,<Transfer_delay>[,<Traffic_handling_priority>[,<Source_statistics_descriptor> [,<Signalling_indication>]]]]]]]]]]]]]]	OK	AT+CGEQMIN=1,2,5760,7168,0,0,0,1480,"1E3","1E5",2,1000,1,0,0 OK
Read	AT+CGEQMIN?	+CGEQMIN: <cid>,<Traffic_class>,<Maximum_bitrate_UL>,<Maximum_bitrate_DL>,<Guaranteed_bitrate_UL>,<Guaranteed_bitrate_DL>,<Delivery_order>,<Maximum_SDU_size>,<SDU_error_ratio>,<Residual_bit_error_ratio>,<Delivery_of_erroneous_SDUs>,<Transfer_delay>,<Traffic_handling_priority>,<Source_statistics_descriptor>,<Signalling_indication> [+CGEQMIN: <cid>,<Traffic_class>,<Maximum_bitrate_UL>,<Maximum_bitrate_DL>,<Guaranteed_bitrate_UL>,<Guaranteed_bitrate_DL>,<Delivery_order>,<Maximum_SDU_size>,<SDU_error_ratio>,<Residual_bit_error_ratio>,<Delivery of erroneous SDUs>,<Transfer_	+CGEQMIN: 1,2,5760,7168,0,0,0,1480,"1E3","1E5",2,1000,1,0,0 OK

Type	Syntax	Response	Example
		delay>,<Traffic_handling_priority>, <Source_statistics_descriptor>, <Signalling_indication> [...]] OK	
Test	AT+CGEQMIN=?	+CGEQMIN: <PDP_type>,(list of supported <Traffic_class>s),(list of supported <Maximum_bitrate_UL>s),(list of supported <Maximum_bitrate_DL>s),(list of supported <Guaranteed_bitrate_UL>s), (list of supported <Guaranteed_bitrate_DL>s),(list of supported <Delivery_order>s),(list of supported <Maximum_SDU_size>s),(list of supported <SDU_error_ratio>s),(list of supported <Residual_bit_error_ratio>s),(list of supported <Delivery_of_erroneous_SDUs>s),(list of supported <Transfer_delay>s),(list of supported <Traffic_handling_priority>s) [+CGEQMIN: <PDP_type>,(list of supported <Traffic_class>s),(list of supported <Maximum_bitrate_UL>s),(list of supported <Maximum_bitrate_DL>s),(list of supported <Guaranteed_bitrate_UL>s), (list of supported <Guaranteed_bitrate_DL>s),(list of supported <Delivery_order>s),(list of supported <Maximum_SDU_size>s),(list of supported <SDU_error_ratio>s),(list of supported <Residual_bit_error_ratio>s),(list of supported <Delivery_of_erroneous_SDUs>s),(list of supported <Transfer_delay>s),(list of supported <Traffic_handling_priority>s),(list of supported <Source_statistics_descriptor>s), (list of supported <Signalling_indication>s) [...]] OK	+CGEQMIN: "IP",(0-3),(1-63 in 1 kbps steps, 64-568 in 8 kbps steps, 576-8640 in 64 kbps steps),(1-63 in 1 kbps steps, 64-568 in 8 kbps steps, 576-8640 in 64 kbps steps, 8700-16000 in 100 kbps steps),(1-63 in 1 kbps steps, 64-568 in 8 kbps steps, 576-8640 in 64 kbps steps),(1-63 in 1 kbps steps, 64-568 in 8 kbps steps, 576-8640 in 64 kbps steps, 8700-16000 in 100 kbps steps),(0-1),(10-1500,1502,1510,1520),("1E6","1E5","1E4","1E3","7E3","1E2","1E1"),("6E8","1E6","1E5","1E4","5E3","4E3","1E3","5E2","1E2"),(0-2),(10-150 in 10 ms steps, 200-950 in 50 ms steps, 100 0-4000 in 50 ms steps),(0-3),(0-1),(0-1) OK

18.32.3 Defined values

Parameter	Type	Description
<cid>	Number	See <cid>
<PDP_type>	String	See <PDP_type>
<Traffic_class>	Number	Indicates the application type for which the UMTS bearer service is optimized (see the 3GPP TS 24.008 [12], subclause 10.5.6.5): • 0: conversational • 1: streaming • 2: interactive • 3: background • 4: subscribed value
<Maximum_bitrate_UL>	Number	Indicates the maximum number of kb/s delivered to UMTS (up-link traffic) at an application processor (see the 3GPP TS 24.008 [12], subclause 10.5.6.5): • Range 1-63 in steps of 1 • Range 64-568 in steps of 8 • Range 576-8640 in steps of 64

Parameter	Type	Description
		• Range 8700-16000 in steps of 100 • Range 17000-128000 in steps of 1000 • Range 130000-256000 in steps of 2000
<Maximum_bitrate_DL>	Number	Indicates the maximum number of kb/s delivered by UMTS (down-link traffic) at an application processor (see the 3GPP TS 24.008 [12], subclause 10.5.6.5): • Range 1-63 in steps of 1 • Range 64-568 in steps of 8 • Range 576-8640 in steps of 64 • Range 8700-16000 in steps of 100 • Range 17000-128000 in steps of 1000 • Range 130000-256000 in steps of 2000
<Guaranteed_bitrate_UL>	Number	Indicates the guaranteed the maximum number of kb/s delivered to UMTS (up-link traffic) at an application processor (see the 3GPP TS 24.008 [12], subclause 10.5.6.5): • Range 1-63 in steps of 1 • Range 64-568 in steps of 8 • Range 576-8640 in steps of 64 • Range 8700-16000 in steps of 100 • Range 17000-128000 in steps of 1000 • Range 130000-256000 in steps of 2000
<Guaranteed_bitrate_DL>	Number	Indicates the guaranteed number of kb/s delivered by UMTS (down-link traffic) at an application processor (see the 3GPP TS 24.008 [12], subclause 10 .5.6.5): • Range 1-63 in steps of 1 • Range 64-568 in steps of 8 • Range 576-8640 in steps of 64 • Range 8700-16000 in steps of 100 • Range 17000-128000 in steps of 1000 • Range 130000-256000 in steps of 2000
<Delivery_order>	Number	Indicates whether the UMTS bearer shall provide in-sequence SDU (Service Data Unit) delivery or not (see the 3GPP TS 24.008 [12], subclause 10.5.6.5): • 0: no • 1: yes • 2: subscribed value
<Maximum_SDU_size>	Number	Indicates the maximum allowed SDU (Service Data Unit) size in octets (see the 3GPP TS 24.008 [12], subclause 10.5.6.5): • 0: subscribed value • Range 10-1500 in steps of 10 octets • 1502 • 1510 • 1520
<SDU_error_ratio>	String	Indicates the target value for the fraction of SDUs (Service Data Unit) lost or detected as erroneous. SDU error ratio is defined only for conforming traffic (see the 3GPP TS 24.008 [12], subclause 10.5.6.5). The value is specified as 'mEe', e.g. a target SDU error ratio of $1*10^{-6}$ would be specified as '1E6': • "1E6": $1*10^{-6}$ • "1E5": $1*10^{-5}$ • "1E4": $1*10^{-4}$ • "1E3": $1*10^{-3}$ • "7E3": $7*10^{-3}$ • "1E2": $1*10^{-2}$ • "1E1": $1*10^{-1}$ • "0E0": subscribed value
<Residual_bit_error_ratio>	String	Indicates the target value for the undetected bit error ratio in the delivered SDUs (Service Data Unit). If no error detection is requested, the parameter indicates the bit error ratio in the delivered SDUs (see the 3GPP TS 24.008 [12], subclause 10.5.6.5). The value is specified as 'mEe', e.g. a target SDU error ratio of $5*10^{-2}$ would be specified as '5E2': • "6E8": $6*10^{-8}$

Parameter	Type	Description
		• "1E6": $1*10^{-6}$ • "1E5": $1*10^{-5}$ • "1E4": $1*10^{-4}$ • "5E3": $5*10^{-3}$ • "4E3": $4*10^{-3}$ • "1E3": $1*10^{-3}$ • "5E2": $5*10^{-2}$ • "1E2": $1*10^{-2}$ • "0E0": subscribed value
<Delivery_of_erroneous_SDUs>	Number	Indicates whether SDUs (Service Data Unit) detected as erroneous shall be delivered or not (see the 3GPP TS 24.008 [12], subclause 10.5.6.5): • 0: no • 1: yes • 2: no detect • 3 (default value): subscribed value
<Transfer_delay>	Number	Indicates the target time, in milliseconds, between a request to transfer an SDU (Service Data Unit) at an application processor and its delivery at the other application processor (see the 3GPP TS 24.008 [12], subclause 10.5.6.5): • Range 10-150 in steps of 10 • Range 200-950 in steps of 50 • Range 1000-4000 in steps of 100
<Traffic_handling_priority>	Number	Specifies the relative importance for handling of all SDUs (Service Data Unit) belonging to the UMTS bearer compared to the SDUs of other bearers (see the 3GPP TS 24.008 [12], subclause 10.5.6.5): • 0: subscribed • 1: priority level 1 • 2: priority level 2 • 3: priority level 3
<Source_statistics_descriptor>	Number	Specifies the characteristics of the source of the submitted SDUs for a PDP context: • 0 (default value): characteristics of the SDUs unknown • 1: characteristics of the SDUs correspond to a speech source
<Signalling_indication>	Number	Specifies signaling content of submitted SDUs for a PDP context: • 0 (default value): PDP context is not optimized for signalling • 1: PDP context is optimized for signalling

18.32.4 Notes

- If <Maximum_bitrate_UL>, <Maximum bitrate DL>, <Guaranteed_bitrate_UL>, <Guaranteed_bitrate_DL>, <Maximum_SDU_size> and <Transfer_delay> parameters are set outside the allowed range, an error message will be provided. If the value is selected within the allowed range, it is rounded to the closest allowed value according to the specified steps.
- If <Traffic_class>=0 (conversational) or <Traffic_class>=1 (streaming), <Maximum_bitrate_UL>, <Maximum bitrate DL>, <Guaranteed_bitrate_UL>, <Guaranteed_bitrate_DL>, <Source_statistics_descriptor> must be provided.
- If <Traffic_class>=2 (interactive), <Signalling_indication> must be provided.

TOBY-L4

- <Traffic_class>=4, <Delivery_of_erroneous_SDUs>=3, <Delivery_order>=2 are not supported.
- The default value of <Traffic_class> and <Delivery_of_erroneous_SDUs> parameters is 0.

LISA-U1

- <Source_statistics_descriptor> and <Signalling_indication> are not supported.

18.33 3G Quality of Service Profile (negotiated) +CGEQNEG

+CGEQNEG						
Modules	TOBY-L4 TOBY-L2 MPCI-L2					
	LARA-R2 TOBY-R2					
	SARA-U2 LISA-U2 LISA-U1					
Attributes	**Syntax**	**PIN required**	**Settings saved**	**Can be aborted**	**Response time**	**Error reference**
	full	Yes	No	No	-	+CME Error

18.33.1 Description

This command allows the TE to retrieve the negotiated QoS profiles returned in the Activate PDP Context Accept message. The execution command returns the negotiated QoS profile for the specified <cid>s. The QoS profile consists of a number of parameters, each of which may have a separate value.

18.33.2 Syntax

Type	Syntax	Response	Example
Set	AT+CGEQNEG=[<cid>[,<cid>[,...]]]	+CGEQNEG: <cid>,<Traffic_class>,<Maximum_bitrate_UL>,<Maximum_bitrate_DL>,<Guaranteed_bitrate_UL>,<Guaranteed_bitrate_DL>,<Delivery_order>,<Maximum_SDU_size>,<SDU_error_ratio>,<Residual_bit_error_ratio>,<Delivery_of_erroneous_SDUs>,<Transfer_delay>,<Traffic_handling_priority>,<Source_statistics_descriptor>,<Signalling_indication> [+CGEQNEG: <cid>,<Traffic_class>,<Maximum_bitrate_UL>,<Maximum_bitrate_DL>,<Guaranteed_bitrate_UL>,<Guaranteed_bitrate_DL>,<Delivery_order>,<Maximum_SDU_size>,<SDU_error_ratio>,<Residual_bit_error_ratio>,<Delivery_of_erroneous_SDUs>,<Transfer_delay>,<Traffic_handling_priority>,<Source_statistics_descriptor>,<Signalling_indication> [...]] OK	AT+CGEQNEG=1 +CGEQNEG: 1,2,5760,7168,0,0,0,1480,"1E3","1E5",2,1000,1,0,0 OK
Test	AT+CGEQNEG=?	+CGEQNEG: (list of <cid>s associated with active contexts) OK	+CGEQNEG: (1) OK

18.33.3 Defined values

Parameter	Type	Description
<cid>	Number	See <cid>
<Traffic_class>	Number	Indicates the application type for which the UMTS bearer service is optimized (see the 3GPP TS 24.008 [12], subclause 10.5.6.5): • 0: conversational • 1: streaming • 2: interactive • 3: background • 4: subscribed value
<Maximum_bitrate_UL>	Number	Indicates the maximum number of kb/s delivered to UMTS (up-link traffic) at an application processor (see the 3GPP TS 24.008 [12], subclause 10.5.6.5): • Range 1-63 in steps of 1

Parameter	Type	Description
		• Range 64-568 in steps of 8 • Range 576-8640 in steps of 64 • Range 8700-16000 in steps of 100 • Range 17000-128000 in steps of 1000 • Range 130000-256000 in steps of 2000
<Maximum_bitrate_DL>	Number	Indicates the maximum number of kb/s delivered by UMTS (down-link traffic) at an application processor (see the 3GPP TS 24.008 [12], subclause 10.5.6.5): • Range 1-63 in steps of 1 • Range 64-568 in steps of 8 • Range 576-8640 in steps of 64 • Range 8700-16000 in steps of 100 • Range 17000-128000 in steps of 1000 • Range 130000-256000 in steps of 2000
<Guaranteed_bitrate_UL>	Number	Indicates the guaranteed number of kb/s delivered to UMTS (up-link traffic) at an application processor (see the 3GPP TS 24.008 [12], subclause 10.5.6.5): • Range 1-63 in steps of 1 • Range 64-568 in steps of 8 • Range 576-8640 in steps of 64 • Range 8700-16000 in steps of 100 • Range 17000-128000 in steps of 1000 • Range 130000-256000 in steps of 2000
<Guaranteed_bitrate_DL>	Number	Indicates the guaranteed number of kb/s delivered by UMTS (down-link traffic) at an application processor (see the 3GPP TS 24.008 [12], subclause 10 .5.6.5): • Range 1-63 in steps of 1 • Range 64-568 in steps of 8 • Range 576-8640 in steps of 64 • Range 8700-16000 in steps of 100 • Range 17000-128000 in steps of 1000 • Range 130000-256000 in steps of 2000
<Delivery_order>	Number	Indicates whether the UMTS bearer shall provide in-sequence SDU (Service Data Unit) delivery or not (see the 3GPP TS 24.008 [12], subclause 10.5.6.5): • 0: no • 1: yes • 2: subscribed value
<Maximum_SDU_size>	Number	Indicates the maximum allowed SDU (Service Data Unit) size in octets (see the 3GPP TS 24.008 [12], subclause 10.5.6.5): • 0: subscribed value • Range 10-1500 in steps of 10 octets • 1502 • 1510 • 1520
<SDU_error_ratio>	String	Indicates the target value for the fraction of SDUs (Service Data Unit) lost or detected as erroneous. SDU error ratio is defined only for conforming traffic (see the 3GPP TS 24.008 [12], subclause 10.5.6.5). The value is specified as 'mEe', e.g. a target SDU error ratio of $1*10^{-6}$ would be specified as '1E6': • "1E6": $1*10^{-6}$ • "1E5": $1*10^{-5}$ • "1E4": $1*10^{-4}$ • "1E3": $1*10^{-3}$ • "7E3": $7*10^{-3}$ • "1E2": $1*10^{-2}$ • "1E1": $1*10^{-1}$ • "0E0": subscribed value
<Residual_bit_error_ratio>	String	Indicates the target value for the undetected bit error ratio in the delivered SDUs (Service Data Unit). If no error detection is requested, the parameter indicates the bit error ratio in the delivered SDUs (see the 3GPP TS 24.008 [12], subclause 10.5.6.5). The value is specified as 'mEe', e.g. a target SDU error ratio of $5*10^{-2}$ would be specified as '5E2':

Parameter	Type	Description
		• "6E8": $6*10^{-8}$ • "1E6": $1*10^{-6}$ • "1E5": $1*10^{-5}$ • "1E4": $1*10^{-4}$ • "5E3": $5*10^{-3}$ • "4E3": $4*10^{-3}$ • "1E3": $1*10^{-3}$ • "5E2": $5*10^{-2}$ • "1E2": $1*10^{-2}$ • "0E0": subscribed value
<Delivery_of_erroneous_SDUs>	Number	Indicates whether SDUs (Service Data Unit) detected as erroneous shall be delivered or not (see the 3GPP TS 24.008 [12], subclause 10.5.6.5): • 0: no • 1: yes • 2: no detect • 3 (default value): subscribed value
<Transfer_delay>	Number	Indicates the target time, in milliseconds, between a request to transfer an SDU (Service Data Unit) at an application processor and its delivery at the other application processor (see the 3GPP TS 24.008 [12], subclause 10.5.6.5): • Range 10-150 in steps of 10 • Range 200-950 in steps of 50 • Range 1000-4000 in steps of 100
<Traffic_handling_priority>	Number	Specifies the relative importance for handling of all SDUs (Service Data Unit) belonging to the UMTS bearer compared to the SDUs of other bearers (see the 3GPP TS 24.008 [12], subclause 10.5.6.5): • 0: subscribed • 1: priority level 1 • 2: priority level 2 • 3: priority level 3
<Source_statistics_descriptor>	Number	Specifies the characteristics of the source of the submitted SDUs for a PDP context: • 0: characteristics of the SDUs unknown • 1: characteristics of the SDUs correspond to a speech source
<Signalling_indication>	Number	Specifies signaling content of submitted SDUs for a PDP context: • 0: PDP context is not optimized for signalling • 1: PDP context is optimized for signalling

18.33.4 Notes

TOBY-L4

- <Traffic_class>=4, <Delivery_of_erroneous_SDUs>=3, <Delivery_order>=2 are not supported.

18.34 Define secondary PDP context +CGDSCONT

+CGDSCONT						
Modules	TOBY-L4 TOBY-L2 MPCI-L2					
	LARA-R2 TOBY-R2					
	SARA-U2 LISA-U2 LISA-U1					
Attributes	**Syntax**	**PIN required**	**Settings saved**	**Can be aborted**	**Response time**	**Error reference**
	full	Yes	No	No	-	+CME Error

18.34.1 Description

Configures the PDP context parameter values for a secondary PDP context, identified by the local context identification parameter <cid>, associated to a primary PDP context identified by the local context identification parameter <p_cid>:

- The <p_cid> parameter is mandatory when a secondary context is newly defined.
- The <p_cid> parameter can be omitted only when the context is already defined; in this case the PDP context identified by <cid> becomes undefined.

☞ TOBY-L4 / TOBY-L2 / MPCI-L2
After the PDP context activation, the information text response to the read command provides the configuration negotiated with the network (similarly to +CGTFTRDP and +CGCONTRDP AT commands).

18.34.2 Syntax

Type	Syntax	Response	Example
Set	AT+CGDSCONT=[<cid>[,<p_cid>[,<d_comp>[,<h_comp>[,<IM_CN_Signalling_Flag_Ind>]]]]]	OK	AT+CGDSCONT=2,1 OK
Read	AT+CGDSCONT?	+CGDSCONT: <cid>,<p_cid>,<d_comp>,<h_comp>[,<IM_CN_Signalling_Flag_Ind>] [+CGDSCONT: <cid>,<p_cid>,<d_comp>,<h_comp>[,<IM_CN_Signalling_Flag_Ind>] [...]] OK	+CGDSCONT: 2,1,0,0,0 OK
Test	AT+CGDSCONT=?	+CGDSCONT: (list of supported <cid>s),(list of <cid>s for defined primary contexts),(list of supported <d_comp>s),(list of supported <h_comp>s)[,(list of supported <IM_CN_Signalling_Flag_Ind>)] OK	+CGDSCONT: (1-8),(4,8),(0-2),(0-2),(0-1) OK

18.34.3 Defined values

Parameter	Type	Description
<cid>	Number	See <cid>
<p_cid>	Number	Numeric parameter that identifies the particular PDP context definition, specified using +CGDCONT, to which a secondary PDP context definition will be associated using +CGDSCONT. This parameter is only locally valid on the interface TE-MT.
<d_comp>	Number	PDP data compression; it can have the values: • 0 (default value): off • 1: on (predefined compression type i.e. V.42bis data compression) • 2: V.42bis data compression
<h_comp>	Number	PDP header compression; it can have the values: • 0 (default value): off • 1: on (predefined compression type, i.e. RFC1144) • 2: RFC1144 • 3: RFC2507 • 4: RFC3095 ☞ <h_comp>: the available head-compressions is depending on configuration of the stack (configured via features in the stack)
<IM_CN_Signalling_Flag_Ind>	Number	Shows whether the PDP context is for IM CN subsystem-related signalling only or not: • 0: PDP context is not for IM CN subsystem-related signalling only • 1: PDP context is for IM CN subsystem-related signalling only

18.34.4 Notes

LARA-R2 / TOBY-R2

- <d_comp>=1, 2 are not supported.

LARA-R202 / LARA-R203 / LARA-R204 / LARA-R220 / LARA-R280 / TOBY-R202

- <h_comp>= 1, 2, 3 and 4 are not supported.

SARA-U2 / LISA-U2 / LISA-U1

- <IM_CN_Signalling_Flag_Ind> parameter is not supported.

SARA-G3 / LEON-G1

- <d_comp>=1, 2 are not supported (<d_comp>=1 may be accepted, but no compression is performed).
- <h_comp>= 2, 3 and 4 are not supported.

18.35 UE modes of operation for EPS +CEMODE

+CEMODE						
Modules	TOBY-L4 TOBY-L2 MPCI-L2					
	LARA-R2 TOBY-R2					
Attributes	**Syntax**	**PIN required**	**Settings saved**	**Can be aborted**	**Response time**	**Error reference**
	full	No	NVM	No	-	+CME Error

18.35.1 Description

Sets the MT to operate according to the specified mode of operation for EPS, see 3GPP TS 24.301 [88]. If the requested operation mode is not supported, an error result code is returned.

☞ u-blox cellular modules are certified according to all the capabilities and options stated in the Protocol Implementation Conformance Statement document (PICS) of the module. The PICS, according to 3GPP TS 51.010-2 [84], 3GPP TS 34.121-2 [85], 3GPP TS 36.521-2 [115] and 3GPP TS 36.523-2 [116], is a statement of the implemented and supported capabilities and options of a device. If the user changes the command settings during the certification process, the PICS of the application device integrating a u-blox cellular module must be changed accordingly.

18.35.2 Syntax

Type	Syntax	Response	Example
Set	AT+CEMODE=[<mode>]	OK	AT+CEMODE=1 OK
Read	AT+CEMODE?	+CEMODE: <mode> OK	+CEMODE: 1 OK
Test	AT+CEMODE=?	+CEMODE: (list of supported <mode>'s) OK	+CEMODE: (0-3) OK

18.35.3 Defined values

Parameter	Type	Description
<mode>	Number	Mode configuration: • 0: PS mode 2 of operation. The UE registers only to EPS services, and the UE's usage setting is "data centric" • 1 (default and factory-programmed value for voice capable devices): CS/PS mode 1 of operation. The UE registers to both EPS and non-EPS services, and the UE's usage setting is "voice centric" • 2 (default and factory-programmed value for voice not-capable devices): CS/PS mode 2 of operation. The UE registers to both EPS and non-EPS services, and the UE's usage setting is "data centric" • 3: PS mode 1 of operation. The UE registers only to EPS services, and the UE's usage setting is "voice centric"

18.35.4 Notes

- A UE set to "Data centric" does not disable the E-UTRAN capability if voice services cannot be obtained. Upon receiving combined EPS/IMSI attach accept or combined TA/LA Update accept with "SMS-only" indication, a data centric UE stays in the current RAT and is not allowed to use CSFB. Upon receiving combined EPS/IMSI attach accept or combined TA/LA Update accept with "CSFB Not Preferred" indication, a data centric UE stays in the current RAT and is allowed to use CSFB.
- A UE set to "Voice centric" shall always try to ensure that Voice service is possible. A CSFB and an IMS/CS-voice capable UE set to "Voice centric" unable to obtain voice service in E-UTRAN (e.g. CSFB and IMS voice are not supported or the configured preferences on how to handle voice services prevent usage of

any available voice services), shall disable the E-UTRAN capability, which results in re-selecting GERAN or UTRAN. The E-UTRAN capability is re-enabled by the UE under the conditions described in 3GPP TS 24.301 [88].

- If +CEMODE is set to EPS-only (<mode>=0 or <mode>=3) the +CGCLASS command setting is automatically updated to class "CG".

TOBY-L200-00S / TOBY-L201 / TOBY-L210-00S / TOBY-L210-60S / TOBY-L220-62S / MPCI-L200-00S / MPCI-L201 / MPCI-L210-00S / MPCI-L210-60S / MPCI-L220-62S / LARA-R204 / LARA-R220

- <mode>=1 and 3 are not supported.

LARA-R203 / LARA-R220

- The factory-programmed value of <mode> is 2.

18.36 EPS network registration status +CEREG

+CEREG						
Modules	TOBY-L4 TOBY-L2 MPCI-L2					
	LARA-R2 TOBY-R2					
Attributes	**Syntax**	**PIN required**	**Settings saved**	**Can be aborted**	**Response time**	**Error reference**
	full	No	No	No	-	+CME Error

18.36.1 Description

Configures the network registration URC related to EPS domain. The URC assumes a different syntax depending on the network and the <n> parameter:

- +CEREG: <stat> when <n>=1 and there is a change in the MT's EPS network registration status in E-UTRAN
- +CEREG: <stat>[,[<tac>],[<ci>],[<AcT>]] when <n>=2 and there is a change of the network cell in EUTRAN
- +CEREG: <stat>[,[<tac>],[<ci>],[<AcT>][,<cause_type>,<reject_cause>]] when <n>=3 and the value of <stat> changes
- +CEREG: <stat>[,[<tac>],[<ci>],[<AcT>][,,[,[<Active_Time>],[<Periodic_TAU>]]]] when <n>=4 if there is a change of the network cell in E-UTRAN
- +CEREG: <stat>[,[<tac>],[<ci>],[<AcT>][,[<cause_type>],[<reject_cause>][,[<Active_Time>],[<Periodic_TAU>]]]] when <n>=5 and the value of <stat> changes

The parameters <AcT>, <tac>, <ci>, <cause_type>, <reject_cause>, <Active_Time> and <Periodic_TAU> are provided only if available.

The read command returns the status of result code presentation and an integer <stat> which shows whether the network has currently indicated the registration of the MT. The location information elements <tac>, <ci> and <AcT>, if available, are returned only when <n>=2 and the MT is registered with the network. The parameters <cause_type>, <reject_cause>, if available, are returned when <n>=3.

☞ TOBY-L4 / TOBY-L2 / MPCI-L2 / LARA-R2 / TOBY-R2
If the EPS MT in GERAN/UTRAN/E-UTRAN also supports circuit mode services and/or GPRS services, the +CREG / +CGREG set and read command result codes apply to the registration status and location information for those services.

18.36.2 Syntax

Type	Syntax	Response	Example
Set	AT+CEREG=[<n>]	OK	AT+CEREG=1 OK
Read	AT+CEREG?	+CEREG: <n>,<stat>[,[<tac>],[<ci>],[<AcT>[,<cause_type>,<reject_cause>]]] OK	+CEREG: 2,1,"3a9b","0000c33d",7 OK
Test	AT+CEREG=?	+CEREG: (list of supported <n>s) OK	+CEREG: (0-3) OK
URC		+CEREG: <stat>[,[<tac>],[<ci>],[<AcT>][,<cause_type>,<reject_	+CEREG: 1,"3a9b","0000c33d",7

Type	Syntax	Response	Example
		cause>[,[<Active_Time>],[<Periodic_TAU>]]]]	

18.36.3 Defined values

Parameter	Type	Description
<n>	Number	Mode configuration: • 0 (default value): network registration URC disabled • 1: network registration URC +CEREG: <stat> enabled • 2: network registration and location information URC +CEREG: <stat>[,[<tac>],[<ci>],[<AcT>]] enabled • 3: network registration, location information and EMM cause value information URC +CEREG: <stat>[,[<tac>],[<ci>],[<AcT>][,<cause_type>,<reject_cause>]] enabled • 4: PSM, network registration and location information information URC +CEREG: <stat>[,[<tac>],[<ci>],[<AcT>][,,[,[<Active_Time>],[<Periodic_TAU>]]]] enabled • 5: PSM, network registration, location information and EMM cause value information URC +CEREG: <stat>[,[<tac>],[<ci>],[<AcT>][,[<cause_type>],[<reject_cause>][,[<Active_Time>],[<Periodic_TAU>]]]] enabled
<stat>	Number	EPS registration status: • 0: not registered, the MT is not currently searching an operator to register to • 1: registered, home network • 2: not registered, but the MT is currently trying to attach or searching an operator to register to • 3: registration denied • 4: unknown (e.g. out of E-UTRAN coverage) • 5: registered, roaming • 8: attached for emergency bearer services only (see 3GPP TS 24.008 [12] and 3GPP TS 24.301 [88] that specify the condition when the MS is considered as attached for emergency bearer services)
<tac>	String	Two bytes tracking area code in hexadecimal format
<ci>	String	Four bytes E-UTRAN cell-id in hexadecimal format
<AcT>	Number	Access technology of the serving cell: • 7: E-UTRAN (see 3GPP TS 44.060 [89] that specifies the System Information messages which give the information about whether the serving cell supports EGPRS) • 8: E-UTRAN EC-GSM-IoT (A/Gb mode) • 9: E-UTRAN Cat NB1
<cause_type>	Number	<reject_cause> type: • 0: indicates that <reject_cause> contains an EMM cause value, see 3GPP TS 24.301 [88] Annex A • 1: indicates that <reject_cause> contains a manufacture-specific cause
<reject_cause>	Number	Cause of the failed registration. The value is of type as defined by <cause_type>
<Active_Time>	String	Indicates the Active Time value (T3324) to be allocated to the UE, one byte in an 8-bit format. For the coding and the value range, see the GPRS Timer 2 IE in 3GPP TS 24.008 [12]
<Periodic_TAU>	String	Indicates the extended periodic TAU value (T3412) to be allocated to the UE in EUTRAN, one byte in an 8-bit format. For the coding and the value range, see the GPRS Timer 3 IE in 3GPP TS 24.008 [12]

18.36.4 Notes

TOBY-L4 / TOBY-L2 / MPCI-L2 / LARA-R2 / TOBY-R2

- <n>= 4 and 5 are not supported.

TOBY-L2 / MPCI-L2

- <stat>= 8 is not supported.
- <AcT>= 8, 9 is not supported.
- The information text response to the read command and the URC will assume these values in these conditions:

- During the initial network searching at the module power on the <stat> parameter is 2
- If the module is PS attached to the GSM/UMTS home network the <stat> parameter is 4
- If the module is registered to E-UTRAN the <stat> parameter is 1
- In the out of coverage state the <stat> parameter is 4

TOBY-L4 / LARA-R2 / TOBY-R2

- <n>= 3 is not supported.
- <AcT>= 8, 9 is not supported.

18.37 Delete non-active PDP contexts +CGDEL

+CGDEL						
Modules	TOBY-L2 MPCI-L2					
Attributes	**Syntax**	**PIN required**	**Settings saved**	**Can be aborted**	**Response time**	**Error reference**
	full	No	No	No	-	+CME Error

18.37.1 Description

Removes the indicated PDP context and removes all the associated data related to the indicated PDP contexts that are not activated. The AT command does not delete or remove the information for activated PDP contexts. The removed PDP context is listed by the +CGDEL: <cid> IRC.

If the <cid> parameter points to a primary PDP context, the PDP context will be deleted together with all the linked secondary PDP contexts if none of the PDP contexts are activated.

If the <cid> parameter points to a secondary PDP context, the PDP context will be deleted if it is not activated.

☞ If the parameter <cid> is omitted, all the primary PDP contexts that are not activated or that have any activated secondary PDP contexts will be removed and all secondary PDP contexts that are not activated will be removed. The associated data of all the deleted PDP contexts will be removed, and the removed PDP context are listed by the +CGDEL: <cid>[,<cid>,...]] IRC.

☞ The command removes the associated PDP context data that can be set by the AT commands +CGDCONT, +CGDSCONT, +CGTFT, +CGEQREQ, +CGEQMIN and +CGEQOS. For an attempt to delete PDP context(s) which would violate these rules, an error result code is returned.

18.37.2 Syntax

Type	Syntax	Response	Example
Set	AT+CGDEL=[<cid>]	+CGDEL: <cid>[,<cid>[,...]] OK	AT+CGDEL=2 +CGDEL: 2 OK
Test	AT+CGDEL=?	OK	OK

18.37.3 Defined values

Parameter	Type	Description
<cid>	Number	See <cid>

18.38 Traffic flow template read dynamic parameters +CGTFTRDP

+CGTFTRDP						
Modules	TOBY-L4 TOBY-L2 MPCI-L2					
	LARA-R2 TOBY-R2					
Attributes	**Syntax**	**PIN required**	**Settings saved**	**Can be aborted**	**Response time**	**Error reference**
	full	No	No	No	-	+CME Error

18.38.1 Description

Returns the relevant information about Traffic Flow Template for an active secondary or non secondary PDP context specified by <cid> together with the additional network assigned values when established by the network.

The test command returns a list of <cid>s associated with active secondary and non secondary contexts.

☞ If the parameter <cid> is omitted, the relevant information for all active secondary non secondary PDP contexts is returned.

☞ The parameters of both network and MT/TA initiated PDP contexts will be returned.

18.38.2 Syntax

Type	Syntax	Response	Example
Set	AT+CGTFTRDP=[<cid>]	[+CGTFTRDP: <cid>,<packet_filter_identifier>,<evaluation_precedence_index>,<source_address_and_subnet_mask>,<protocol_number_(ipv4)/next_header_(ipv6)>,<local_port_range>,<remote_port_range>,<ipsec_security_parameter index (spi)>,<type_of_service_(tos)(ipv4)_and_mask/traffic_class_(ipv6)_and_mask>,<flow_label(ipv6)>,<direction>,<NW_packet_filter_Identifier>] [+CGTFTRDP: <cid>,<packet_filter_identifier>,<evaluation_precedence_index>,<source_address_and_subnet_mask>,<protocol_number_(ipv4)/next_header_(ipv6)>,<local_port_range>,<remote_port_range>,<ipsec_security_parameter index (spi)>,<type_of_service_(tos)(ipv4)_and_mask/traffic_class_(ipv6)_and_mask>,<flow_label(ipv6)>,<direction>,<NW_packet_filter_Identifier>] [...]] OK	AT+CGTFTRDP=2 +CGTFTRDP: 2,1,1,"8.9.10.11.255.255.0.0",0,0.65535,0.65535,0,0,0,0,0 OK
Test	AT+CGTFTRDP=?	+CGTFTRDP: (list of <cid>s associated with active contexts) OK	+CGTFTRDP: 1,2 OK

18.38.3 Defined values

Parameter	Type	Description
<cid>	Number	See Chapter 18.1.3.2
<packet_filter_identifier>	Number	Packet filter: • Range: 1 - 8

Parameter	Type	Description
<evaluation_precedence_index>	Number	Evaluation precedence index that is unique within all TFTs associated with the PDP contexts that share the same PDP address • Range: 0-255 (from highest evaluation precedence to lowest evaluation precedence)
<source_address_and_subnet_mask>	String	Specifies the source address and subnet mask attribute of a valid packet filter. Consists of dot-separated numeric (0-255) parameters on the form: • "a1.a2.a3.a4.m1.m2.m3.m4" for IPv4 • "a1.a2.a3.a4.a5.a6.a7.a8.a9.a10.a11.a12.a13.a14.a15.a16 .m1.m2.m3.m4.m5.m6.m7.m8.m9.m10 .m11.m12.m13.m14.m15.m16" for IPv6
<protocol_number_(ipv4)/next_header_ (ipv6)>	Number	Specifies the Protocol Number / Next Header attribute of a valid packet filter. It shall contain either an IPv4 Protocol Number or an IPv6 Next Header value. • Range: 0 -255
<local_port_range>	Number	Specifies the destination port range attribute of a valid packet filter: • The range goes from 0 to 65535
<remote_port_range>	Number	Specifies the source port range attribute of a valid packet filter: • The range goes from 0 to 65535
<ipsec_security_parameter index_(spi)>	String	IPSec SPI attribute of a valid packet filter which is a 32-bit field. • Range: 0x00000000 - 0xFFFFFFFF
<type_of_service_(tos)(ipv4)_and_mask/ traffic_class_(ipv6)_and_mask>	String	dot-separated numbers on the form "t.m" that specifies the Type of Service / Traffic Class and Mask attribute of a valid packet filter. It shall contain either an IPv4 TOS octet or an IPv6 Traffic Class octet along with a mask defining which of the 8 bits should be used for matching. • Range: 0-65535
<flow_label(ipv6)>	String	Specifies the Flow Label attribute of a valid packet filter. It is only valid for IPv6. • Range: 0x00000 - 0xFFFFF
<direction>	Number	Specifies the transmission direction in which the packet filter shall be applied: • 0: Pre Release 7 TFT Filter (see 3GPP TS 24.008 [12], table 10 .5.162) • 1: uplink • 2: downlink • 3: bidirectional (used for uplink and downlink)
<NW_packet_filter_Identifier>	Number	The value range is from 1 to 16. In LTE the value is assigned by the network when the dedicated EPS bearer is established.

18.39 Configure the authentication parameters of a PDP/EPS bearer +UAUTHREQ

+UAUTHREQ						
Modules	TOBY-L4 TOBY-L2 MPCI-L2					
	LARA-R2 TOBY-R2					
	SARA-U201 SARA-U260-03S SARA-U270-03A SARA-U270-03S SARA-U270-04B SARA-U270-53S SARA-U270-73S SARA-U280-03S LISA-U200-03S LISA-U200-83S LISA-U201					
	SARA-G340-02S SARA-G340-02X SARA-G350-02A SARA-G350-02S SARA-G350-02X SARA-G350-53S					
Attributes	**Syntax**	**PIN required**	**Settings saved**	**Can be aborted**	**Response time**	**Error reference**
	partial	Yes	NVM	No	-	+CME Error

18.39.1 Description

Configures the authentication parameters of a defined PDP/EPS bearer. The authentication parameters will be sent during the context activation phase as a protocol configuration options (PCO) information element.

When <auth_type>=3 is set, +CGACT=1,<cid> may trigger at most 3 PDP context activation requests for <cid> to the protocol stack. The first request for <cid> is done with no authentication. If the PDP context activation fails, a second attempt is triggered with PAP authentication. If the second PDP context activation fails, a third attempt is triggered with CHAP authentication. These 3 PDP context activation requests are not to be confused with the effective number of request PDP context activations sent to the network (see the 3GPP TS 24.008 [12]).

☞ The command returns an error result code if the input <cid> is already active or not yet defined.

18.39.2 Syntax

Type	Syntax	Response	Example
Set	AT+UAUTHREQ=<cid>,<auth_type>,<username>,<password>	OK	AT+UAUTHREQ=1,1,"user","pass" OK
Test	AT+UAUTHREQ=?	+UAUTHREQ: (list of supported <cid>s),(list of supported <auth_type>s)[,,] OK	+UAUTHREQ: (1-8),(0-2),, OK

18.39.3 Defined values

Parameter	Type	Description
<cid>	Number	See <cid>.
<auth_type>	Number	Configure the authentication. Allowed values: • 0: no authentication • 1: PAP • 2: CHAP • 3: automatic selection of authentication type (none/CHAP/PAP)
<username>	String	Username. The default value is an empty string: • TOBY-L4 / LARA-R2 / TOBY-R2 / SARA-U2 / LISA-U2 - The maximum length is 64. • TOBY-L2 / MPCI-L2 - The maximum length is 50. • SARA-G3 - The maximum length is 32.
<password>	String	Password. The default value is an empty string: • TOBY-L4 / LARA-R2 / TOBY-R2 / SARA-U2 / LISA-U2 - The maximum length is 64. • TOBY-L2 / MPCI-L2 - The maximum length is 50. • SARA-G3 - The maximum length is 32.

18.39.4 Notes

- In a PPP dial-up scenario, the authentication parameters set by the +UAUTHREQ command are overwritten whenever the host provides a new setting via the PPP authentication protocol (PAP or CHAP).
- The <username> and <password> parameters must be set to an empty string if the authentication type is not set (<auth_type>=0).

TOBY-L4

- <auth_type>=3 is not supported.

TOBY-L2 / MPCI-L2

- If <auth_type>=0 the <username> and <password> parameters are not mandatory.
- <auth_type>=3 is not supported.
- The command setting is not saved in NVM.

TOBY-L200-00S / TOBY-L201 / TOBY-L210-00S / TOBY-L210-60S / MPCI-L200-00S / MPCI-L201 / MPCI-L210-00S / MPCI-L210-60S

- In a PPP dial-up scenario, the authentication parameters set by the +UAUTHREQ command are not overwritten when the host provides a new setting via the PPP authentication protocol (PAP or CHAP).

LARA-R2 / TOBY-R2

- <auth_type>=3 settings is not effective for the initial default EPS bearer established during the LTE attach.

LARA-R202 / LARA-R203 / LARA-R204 / LARA-R211 / TOBY-R2

- TOBY-R200-02B-00, TOBY-R202-02B-00, TOBY-R200-02B-01, TOBY-R202-02B-01, LARA-R202-02B-00, LARA-R203-02B-00, LARA-R204-02B-00, LARA-R211-02B-00 do not save the command setting in NVM.

SARA-U2 / LISA-U2 / SARA-G3

- The command setting is not saved in NVM.

18.40 Send custom packets over a context +UTGSINK

+UTGSINK						
Modules	TOBY-L2 MPCI-L2					
Attributes	**Syntax**	**PIN required**	**Settings saved**	**Can be aborted**	**Response time**	**Error reference**
	full	No	No	No	-	+CME Error

18.40.1 Description

Sends the required number of packets over a context identified by <cid>. The packet content is hardcoded and is a series of '*' characters.

No check is performed on <cid>'s status: the context must be activated before issuing the command.

The sending process is not guaranteed, and might depend on channel conditions and internal protocols status.

18.40.2 Syntax

Type	Syntax	Response	Example
Set	AT+UTGSINK=[[<cid>][,<packet_size>][,<packet_count>]]	OK	AT+UTGSINK=1,1400,10 OK
			AT+UTGSINK=1,1200 OK
			AT+UTGSINK=4 OK
Test	AT+UTGSINK=?	+UTGSINK: (list of supported <cid>s),(list of supported <packet_size>s),(list of supported <packet_count>s) OK	+UTGSINK: (1-8),(1-1500),(1-50) OK

18.40.3 Defined values

Parameter	Type	Description
<cid>	Number	Context identifier. The range goes from 1 to 8. The default value is 1.

Parameter	Type	Description
<packet_size>	Number	Packet size in bytes. The range goes from 1 to 1500. The default value is 1
<packet_count>	Number	Number of packets to send. The range goes from 1 to 50. The default value is 1

18.41 Define EPS quality of service +CGEQOS

+CGEQOS						
Modules	TOBY-L4 TOBY-L2 MPCI-L2					
	LARA-R2 TOBY-R2					
Attributes	**Syntax**	**PIN required**	**Settings saved**	**Can be aborted**	**Response time**	**Error reference**
	full	No	No	No	-	+CME Error

18.41.1 Description

Allows the TE to specify the EPS Quality of Service parameters <cid>, <QCI>, <DL_GBR>, <UL_GBR>, <DL_MBR> and <UL_MBR> for a PDP context or Traffic Flows (see 3GPP TS 24.301 [88] and 3GPP TS 23.203 [91]). When in UMTS/GPRS the MT applies a mapping function to UTMS/GPRS Quality of Service.

The read command returns the current settings for each defined QoS.

☞ TOBY-L4 / TOBY-L2 / MPCI-L2
After the PDP context activation, the information text response to the read command provides the configuration negotiated with the network (similarly to +CGTFTRDP and +CGCONTRDP AT commands).

☞ The set command +CGEQOS=<cid> causes the values for context number <cid> to become undefined.

18.41.2 Syntax

Type	Syntax	Response	Example
Set	AT+CGEQOS=[<cid>[,<QCI>[,<DL_GBR>,<UL_GBR>[,<DL_MBR>,<UL_MBR>]]]]	OK	AT+CGEQOS=1,1,2500,7000,2500,7000 OK
Read	AT+CGEQOS?	+CGEQOS: <cid>,<QCI>,[<DL_GBR>,<UL_GBR>],[DL_MBR>,<UL_MBR>] OK	+CGEQOS: 1,1,2500,7000,2500,7000 OK
Test	AT+CGEQOS=?	+CGEQOS: (list of supported <cid>s),(list of supported <QCI>s),(list of supported <DL_GBR>s),(list of supported <UL_GBR>s),(list of supported <DL_MBR>s),(list of supported <UL_MBR>s) OK	+CGEQOS: (1-8),(0-9),(0-5000),(0-21000),(0-5000),(0-21000) OK

18.41.3 Defined values

Parameter	Type	Description
<cid>	Number	See Chapter 18.1.3.2.
<QCI>	Number	Specifies a class of EPS QoS (see 3GPP TS 24.301 [88]): • 0: QCI is selected by network • 1-4: value range for guaranteed bit rate Traffic Flows • 5-9: value range for non-guaranteed bit rate Traffic Flows • 128-254: value range for Operator-specific QCIs
<DL_GBR>	Number	Indicates DL GBR in case of GBR QCI. The value is expressed in kb/s. This parameter is omitted for a non-GBR QCI (see 3GPP TS 24.301 [88]).
<UL_GBR>	Number	Indicates UL GBR in case of GBR QCI. The value is expressed in kb/s. This parameter is omitted for a non-GBR QCI (see 3GPP TS 24.301 [88]).
<DL_MBR>	Number	Indicates DL MBR in case of GBR QCI. The value is expressed in kb/s. This parameter is omitted for a non-GBR QCI (see 3GPP TS 24.301 [88]).
<UL_MBR>	Number	Indicates UL MBR in case of GBR QCI. The value is expressed in kb/s. This parameter is omitted for a non-GBR QCI (see 3GPP TS 24.301 [88]).

18.42 EPS quality of service read dynamic parameters +CGEQOSRDP

+CGEQOSRDP						
Modules	TOBY-L4 TOBY-L2 MPCI-L2					
	LARA-R2 TOBY-R2					
Attributes	**Syntax**	**PIN required**	**Settings saved**	**Can be aborted**	**Response time**	**Error reference**
	full	Yes	No	No	-	+CME Error

18.42.1 Description

Returns the Quality of Service parameters <QCI>, <DL_GBR>, <UL_GBR>, <DL_MBR> and <UL_MBR> of the active secondary or non secondary PDP context associated to the provided context identifier <cid>.

The test command returns a list of <cid>s associated with secondary or non secondary active PDP contexts.

The parameters of both network and MT/TA initiated PDP contexts will be returned.

☞ If the parameter <cid> is omitted, the Quality of Service parameters for all the secondary and non secondary active PDP contexts are returned.

18.42.2 Syntax

Type	Syntax	Response	Example
Set	AT+CGEQOSRDP=[<cid>]	+CGEQOSRDP: <cid>,<QCI>,[<DL_GBR>,<UL_GBR>],[DL_MBR>,<UL_MBR>],[DL_AMBR>,<UL_AMBR>] OK	AT+CGEQOSRDP=1 +CGEQOSRDP: 1,7,0,0,0,0 OK
Test	AT+CGEQOSRDP=?	+CGEQOSRDP: (list of <cid>s associated with active contexts) OK	+CGEQOSRDP: 1 OK

18.42.3 Defined values

Parameter	Type	Description
<cid>	Number	See <cid>.
<QCI>	Number	Specifies a class of EPS QoS (see 3GPP TS 24.301 [88]): • 0: QCI is selected by network • 1-4: value range for guaranteed bit rate Traffic Flows • 5-9: value range for non-guaranteed bit rate Traffic Flows • 128-254: value range for Operator-specific QCIs
<DL_GBR>	Number	Indicates DL GBR in case of GBR QCI. The value is expressed in kb/s. This parameter is omitted for a non-GBR QCI (see 3GPP TS 24.301 [88]).
<UL_GBR>	Number	Indicates UL GBR in case of GBR QCI. The value is expressed in kb/s. This parameter is omitted for a non-GBR QCI (see 3GPP TS 24.301 [88]).
<DL_MBR>	Number	Indicates DL MBR in case of GBR QCI. The value is expressed in kb/s. This parameter is omitted for a non-GBR QCI (see 3GPP TS 24.301 [88]).
<UL_MBR>	Number	Indicates UL MBR in case of GBR QCI. The value is expressed in kb/s. This parameter is omitted for a non-GBR QCI (see 3GPP TS 24.301 [88]).
<DL_AMBR>	Number	Indicates DL APN aggregate MBR (see 3GPP TS 24.301 [88]). The value is expressed in kb/s.
<UL_AMBR>	Number	Indicates UL APN aggregate MBR (see 3GPP TS 24.301 [88]). The value is expressed in kb/s.

18.42.4 Notes

TOBY-L2 / MPCI-L2

- If the parameter <cid> is omitted, the "AT+CGEQOSRDP" command must be issued (without "=").

18.43 Secondary PDP context read dynamic parameters +CGSCONTRDP

+CGSCONTRDP						
Modules	TOBY-L4 TOBY-L2 MPCI-L2					
	LARA-R2 TOBY-R2					
Attributes	**Syntax**	**PIN required**	**Settings saved**	**Can be aborted**	**Response time**	**Error reference**
	full	No	No	No	-	+CME Error

18.43.1 Description

Returns the <p_cid>, <bearer_id> and <IM_CN_Signalling_Flag_Ind> parameters for an active secondary PDP context having the context identifier <cid>. The test command returns the list of <cid>s associated with active secondary PDP contexts.

If the parameter <cid> is omitted, the relevant information for all active secondary PDP contexts is returned.

The parameters for UE initiated and network initiated PDP contexts are returned.

In EPS, the Traffic Flow parameters are returned.

18.43.2 Syntax

Type	Syntax	Response	Example
Set	AT+CGSCONTRDP=[<cid>]	[+CGSCONTRDP: <cid>,<p_cid>, <bearer_id>[,<IM_CN_Signalling_Flag_Ind>]] [+CGSCONTRDP: <cid>,<p_cid>, <bearer_id>[,<IM_CN_Signalling_Flag_Ind>] [...]] OK	AT+CGSCONTRDP=2 +CGSCONTRDP: 2,1,6,0 OK
Test	AT+CGSCONTRDP=?	+CGSCONTRDP: (list of active secondary PDP contexts) OK	+CGSCONTRDP: 2 OK

18.43.3 Defined values

Parameter	Type	Description
<cid>	Number	See <cid>
<p_cid>	Number	Numeric parameter that identifies the particular PDP context definition, specified using +CGDCONT, to which a secondary PDP context definition will be associated using +CGDSCONT. This parameter is only locally valid on the interface TE-MT.
<bearer_id>	Number	Bearer identification, i.e. the EPS bearer in EPS and the NSAPI in UMTS/GPRS. The allowed range goes from 5 to 16.
<IM_CN_Signalling_Flag_Ind>	Number	Shows whether the PDP context is for IM CN subsystem-related signalling only or not: • 0: PDP context is not for IM CN subsystem-related signalling only • 1: PDP context is for IM CN subsystem-related signalling only

18.44 UE's usage setting for EPS +CEUS

+CEUS						
Modules	TOBY-L2 MPCI-L2					
Attributes	Syntax	PIN required	Settings saved	Can be aborted	Response time	Error reference
	full	No	No	No	-	+CME Error

18.44.1 Description

Sets the MT to operate according to the specified UE's usage setting for EPS, as defined in 3GPP TS 24.301 [88].

The read command returns the usage setting set by the TE.

The test command is used for requesting information on the supported MT settings.

18.44.2 Syntax

Type	Syntax	Response	Example
Set	AT+CEUS=[<setting>]	OK	AT+CEUS=1 OK
Read	AT+CEUS?	+CEUS: <setting> OK	+CEUS: 1 OK
Test	AT+CEUS=?	+CEUS: (list of supported <setting>s) OK	+CEUS: (0,1) OK

18.44.3 Defined values

Parameter	Type	Description
<setting>	Number	Configure the UE usage setting: • 0: voice centric • 1 (default value): data centric

18.44.4 Notes

- See 3GPP TS 23.221 [90] for the definition of the "voice centric" and "data centric" usage settings.

TOBY-L200-00S / TOBY-L201 / TOBY-L210-00S / TOBY-L210-60S / TOBY-L220-62S / MPCI-L200-00S / MPCI-L201 / MPCI-L210-00S / MPCI-L210-60S / MPCI-L220-62S

- The <setting> parameter cannot be set to 0.

18.45 PDP Context Read Dynamic Parameters +CGCONTRDP

+CGCONTRDP						
Modules	TOBY-L4 TOBY-L2 MPCI-L2					
	LARA-R2 TOBY-R2					
Attributes	Syntax	PIN required	Settings saved	Can be aborted	Response time	Error reference
	partial	No	No	No	-	+CME Error

18.45.1 Description

Returns the relevant information <bearer_id>, <APN>, <local_addr_and_subnet_mask>, <gw_addr>, <DNS_prim_addr>, <DNS_sec_addr>, <P-CSCF_prim_addr>, <P-CSCF_sec_addr>, <IM_CN_Signalling_Flag> and <LIPA_indication> for an active non secondary PDP context with the context identifier <cid>.

If the MT has dual stack capabilities, for each <cid> will be printed two different rows: the first one will contain the IPv4 parameters, in the second one the IPv6 parameters.

A set command with an undefined <cid> provides an error result code.

18.45.2 Syntax

Type	Syntax	Response	Example
Set	AT+CGCONTRDP[=<cid>]	+CGCONTRDP: <cid>,<bearer_id>,<APN>[,<local_addr_and_subnet_mask>[,<gw_addr>[,<DNS_prim_addr>[,<DNS_sec_addr>[,<P-CSCF_prim_addr>[,<P-CSCF_sec_addr>[,<IM_CN_Signalling_Flag_Ind>[,<LIPA_indication>]]]]]]]] [+CGCONTRDP: <cid>,<bearer_id>,<APN>[,<local_addr_and_subnet_mask>[,<gw_addr>[,<DNS_prim_addr>[,<DNS_sec_addr>[,<P-CSCF_prim_addr>[,<P-CSCF_sec_addr>[,<IM_CN_Signalling_Flag_Ind>[,<LIPA_indication>]]]]]]]] OK	AT+CGCONTRDP=1 +CGCONTRDP: 1,0,"web.omnitel.it", "109.113.62.238.255.255.255.255", "109.113.62.201","83.224.70.77", "83.224.70.54",,,,0 OK
Test	AT+CGCONTRDP=?	+CGCONTRDP: (list of active non secondary PDP contexts) OK	+CGCONTRDP: 1 OK

18.45.3 Defined values

Parameter	Type	Description
<cid>	Number	See <cid>
<APN>	String	See <APN>
<bearer_id>	Number	Identifies the bearer, i.e. the EPS bearer in EPS and the NSAPI in UMTS/GPRS. The range goes from 5 to 16
<local_addr_and_subnet_mask>	String	IP address and subnet mask of the MT. The string is given as dot-separated numeric (0-255) parameters on the form: • "a1.a2.a3.a4.m1.m2.m3.m4" for IPv4 • "a1.a2.a3.a4.a5.a6.a7.a8.a9.a10 .a11.a12.a13.a14.a15.a16.m1.m2.m3.m4.m5.m6.m7.m8.m9.m10 .m11.m12.m13.m14.m15.m16" for IPv6
<gw_addr>	String	Gateway Address of the MT. The string is given as dot-separated numeric (0-255) parameters.
<DNS_prim_addr>	String	IP address of the primary DNS server.
<DNS_sec_addr>	String	IP address of the secondary DNS server.
<P-CSCF_prim_addr>	String	IP address of the primary P-CSCF server.
<P-CSCF_sec_addr>	String	IP address of the secondary P-CSCF server.
<IM_CN_Signalling_Flag_Ind>	Number	Shows whether the PDP context is for IM CN subsystem-related signalling only or not: • 0: PDP context is not for IM CN subsystem-related signalling only • 1: PDP context is for IM CN subsystem-related signalling only
<LIPA_indication>	Number	Indicates that the PDP context provides connectivity using a LIPA PDN connection. This parameter cannot be set by the TE: • 0: indication not received that the PDP context provides connectivity using a LIPA PDN connection • 1: indication received that the PDP context provides connectivity using a LIPA PDN connection

18.45.4 Notes

TOBY-L4 / LARA-R2 / TOBY-R2

- The <cid> parameter is mandatory.

18.46 Configure the initial EPS bearer / PDP context +UCGDFLT

+UCGDFLT						
Modules	TOBY-L2 MPCI-L2					
Attributes	**Syntax**	**PIN required**	**Settings saved**	**Can be aborted**	**Response time**	**Error reference**
	full	No	NVM	No	-	+CME Error

18.46.1 Description

Configures the initial PDP context, i.e. sets the configuration of the PDN activated at attach time in LTE network. The configuration can be optionally saved in NVM.

Once registered, the initial default bearer will obtain a <cid> context identifier by the rules described in AT +CGDCONT command. The active context configuration will be available through standard 3GPP TS 27.007 [2] AT commands, by using this <cid> context identifier.

The AT+CGDCONT command cannot be used to define the initial PDP context even though a valid <cid> is assigned at its activation.

If the module is already registered to a LTE network the user is required to:

- Deregister with AT+CFUN=4
- Change the initial PDP context configuration with AT+UCGDFLT
- Register again with AT+CFUN=1 (the MT is set now to full functionality, the registration will start if manual or automatic registration was previously set)

☞ In case <cid>=4 has been already defined via +CGDCONT (to be avoided), the <cid> for the initial default EPS bearer will be selected in the following order [3,2,1,5,6,7,8]. It is recommended to leave <cid>=4 undefined.

18.46.2 Syntax

Type	Syntax	Response	Example
Set	AT+UCGDFLT=<nvm_mode>[,<PDP_type>[,<APN>[,<emg_ind>[,<ipcp_req>[,<pcscf_v6>[,<imcn_sig>[,<dns_v6>[,<nw_bear>[,<dsm_v6_ha>[,<dsm_v6_pref>[,<dsm_v6_ha_v4>[,<ip_via_nas>[,<ip_via_dhcp>[,<pcscf_v4>[,<dns_v4>[,<msisdn>[,<ifom>[,<v4mtu>[,<local_tft>[,<auth_type>[,<auth_user>[,<auth_pass>[,<vendor_specific>[,<NSLPI>]]]

Type	Syntax	Response	Example
		(list of supported <dsm_v6_ha_v4>s),(list of supported <ip_via_nas>s),(list of supported <ip_via_dhcp>s),(list of supported <pcscf_v4>s),(list of suppored <dns_v4>s),(list of supported <msisdn>s),(list of supported <ifom>s),(list of supported <v4mtu>s),(list of supported <local_tft>s),(list of supported <auth_type>s),,,[,(list of supported <NSLPI>s)] [..] OK	1),(0-1),(0-1),(0-1),(0-1),(0-1),(0-1),(0-1),(0-1),(0-2),,, OK

18.46.3 Defined values

Parameter	Type	Description
<nvm_mode>	Number	State configuration: • 0: set the initial PDP configuration without saving it in NVM • 1: set and save the initial PDP configuration
<PDP_type>	String	Configures the PDP context type. The default type is "IP".
<APN>	String	Configures the PDN's APN name. The default value is "".
<emg_ind>	Number	Indicates whether the context is for emergency bearer services or not: • 0 (default value): PDP context is not for emergency bearer services • 1: PDP context is for emergency bearer services
<ipcp_req>	Number	PCO option related to IPCP. See 3GPP TS 24.008 [12] ch. 10.5.6.3: • 0 (default value): request disabled • 1: request enabled
<pcscf_v6>	Number	PCO option related to P-CSCF IPv6 server discovery. See 3GPP TS 24.008 [12] ch. 10.5.6.3: • 0 (default value): request disabled • 1: request enabled
<icmn_sig>	Number	PCO option related to IM-CN subsystem signalling bearer. See 3GPP TS 24.008 [12] ch. 10.5.6.3: • 0 (default value): request disabled • 1: request enabled
<dns_v6>	Number	PCO option related to DNSv6 server discovery. See 3GPP TS 24.008 [12] ch. 10.5.6.3: • 0 (default value): request disabled • 1: request enabled
<nw_bear>	Number	Reserved for future use
<dsm_v6_ha>	Number	Reserved for future use
<dsm_v6_pref>	Number	Reserved for future use
<dsm_v6_ha_v4>	Number	Reserved for future use
<ip_via_nas>	Number	PCO option related to IP address assignation via NAS signalling. See 3GPP TS 24.008 [12] ch. 10.5.6.3: • 0: request disabled • 1 (default value): request enabled
<ip_via_dhcp>	Number	PCO option related to IP address assignation via DHCP. See 3GPP TS 24.008 [12] ch. 10.5.6.3: • 0 (default value): request disabled • 1: request enabled
<pcscf_v4>	Number	PCO option related to P-CSCF IPv4 server discovery. See 3GPP TS 24.008 [12] ch. 10.5.6.3: • 0 (default value): request disabled • 1: request enabled
<dns_v4>	Number	PCO option related to DNSv4 server discovery. See 3GPP TS 24.008 [12] ch. 10.5.6.3: • 0: request disabled • 1 (default value): request enabled
<msisdn>	Number	Reserved for future use

Parameter	Type	Description
<ifom>	Number	Reserved for future use
<v4mtu>	Number	Reserved for future use
<local_tft>	Number	Reserved for future use
<auth_type>	Number	Configure the authentication: • 0 (default value): no authentication • 1: PAP • 2: CHAP
<auth_user>	String	Username. The maximum length is 50 characters, the default value is the NULL string.
<auth_pass>	String	Password. The maximum length is 50 characters, the default value is the NULL string.
<vendor_specific>	String	Vendor specific PCO. If given, the string must be "" or a combination of hexadecimal digit quadruplets d.d.d.d in range [FF00-FFFF]. Allowed examples: • "FF00" • "FF00FF01FF02FFFF" • "FF00FFFF" • "" The default value is the empty string "", which disables the PCO.
<NSLPI>	Number	Indicates the NAS signalling priority requested for the corresponding PDP context: • 0 (default value): indicates that the PDP context has to be activated with the value for the low priority indicator configured in the MT. • 1: indicates that the PDP context has to be activated with the value for the low priority indicator set to "MS is not configured for NAS signalling low priority". The MT utilises the provide NSLPI information as specified in 3GPP TS 24.301 [88] and 3GPP TS 24.008 [12].

18.46.4 Notes

TOBY-L2 / MPCI-L2

- The <NSLPI> parameter is not supported.

TOBY-L200 / TOBY-L201 / MPCI-L200 / MPCI-L201

- The factory-programmed value of <APN> parameter is "broadband" (AT&T).

TOBY-L210-00S / TOBY-L210-02S / TOBY-L210-03A / TOBY-L210-03S / TOBY-L210-60S / TOBY-L220 / TOBY-L280 / MPCI-L210 / MPCI-L220 / MPCI-L280

- The factory-programmed value of <APN> parameter is an empty string.

TOBY-L210-62S

- The factory-programmed value of <APN> parameter is "4gsmartphone"; <APN> parameter cannot be set to an empty string.
- A single data PDP context is allowed; hence the <PDP_type> parameter can be set only to "IP".

18.47 Always-On mode parameters settings +CGPERMSET

+CGPERMSET						
Modules	LISA-U270-62S LISA-U270-63S LISA-U270-68S					
Attributes	**Syntax**	**PIN required**	**Settings saved**	**Can be aborted**	**Response time**	**Error reference**
	full	No	No	No	-	+CME Error

18.47.1 Description

Sets the APN, user ID, password and the Keep Alive timer for the Always-On mode. If the command sets the parameter value out of the allowed range, an ERROR result code is returned whatever is the configuration of +CMEE command.

For sake of simplicity in <cid> management, <cid> uniquely identifies a PDP context within the module. Such PDP context may be defined either with +CGPERMSET or with +CGDCONT command and no check is internally done in SW on which cid has been configured with which command. This assures large flexibility in handling the 11 definable PDP contexts. It is recommended to exploit the whole cid range and to assign Always on PDP contexts and other PDP contexts different <cid> values.

18.47.2 Syntax

Type	Syntax	Response	Example
Set	AT+CGPERMSET=<cid>,<apn>,<id>,<pwd>[,<time>]	OK	
Read	AT+CGPERMSET?	AT+CGPERMSET: <cid>,<apn>,<id>,<pwd>,<time> OK	
Test	AT+CGPERMSET=?	+CGPERMSET: (list of supported <cid>s),,,,(list of supported <time>s) OK	

18.47.3 Defined values

Parameter	Type	Description
<cid>	Number	See Chapter 18.1.3.2
<APN>	String	See Chapter 18.1.3.1
<id>	String	User ID to be used in Always-On mode
<pwd>	String	Password to be used in Always-On mode
<time>	Number	Value expressed in minutes of Keep Alive Time to be used in Always-On mode The range goes from 60 to 600. The default value is 120 (min)

18.48 Always-On mode settings +CGPERMACT

+CGPERMACT						
Modules	LISA-U270-62S LISA-U270-63S LISA-U270-68S					
Attributes	Syntax	PIN required	Settings saved	Can be aborted	Response time	Error reference
	full	No	No	No	-	+CME Error

18.48.1 Description

Sets the Always-On mode / On-Demand mode. A protocol level error causes the issuing of the +ALWAYSONERROR URC. If the command sets the parameter value out of the allowed range, an ERROR result code is returned whatever is the configuration of +CMEE command.

18.48.2 Syntax

Type	Syntax	Response	Example
Set	AT+CGPERMACT=<cid>,<mode>	OK	
Read	AT+CGPERMACT?	AT+CGPERMACT: <cid>,<mode> OK	
Test	AT+CGPERMACT=?	+CGPERMACT: (list of supported <cid>s),(list of supported <mode>s) OK	
URC		+ALWAYSONERROR OK	

18.48.3 Defined values

Parameter	Type	Description
<cid>	Number	See Chapter 18.1.3.2
<mode>	Number	Mode set for the module • 0: On-Demand mode • 1: Always-On mode

18.49 Always-On mode check state +CGPERMSTATE

+CGPERMSTATE						
Modules	LISA-U270-62S LISA-U270-63S LISA-U270-68S					
Attributes	**Syntax**	**PIN required**	**Settings saved**	**Can be aborted**	**Response time**	**Error reference**
	full	No	No	No	-	+CME Error

18.49.1 Description

Returns the Always-On state on which the module currently belongs.

18.49.2 Syntax

Type	Syntax	Response	Example
Read	AT+CGPERMSTATE?	AT+CGPERMSTATE: <cid>,<mode> OK	If the On-Demand mode is disabled: +CGPERMSTATE: ,0 OK Otherwise: +CGPERMSTATE: 1,0 OK
Test	AT+CGPERMSTATE=?	+CGPERMSTATE: (list of supported <cid>s),(list of supported <state>s) OK	

18.49.3 Defined values

Parameter	Type	Description
<cid>	Number	See Chapter 18.1.3.2
<state>	Number	State to which the module belongs • 0: On-Demand mode state • 1: Always-On active state • 2: Always-On stand-by state • 3: Always-On pending state • 4: other unknown state

18.50 Traffic Flow Template +CGTFT

+CGTFT						
Modules	TOBY-L4 TOBY-L2 MPCI-L2					
	LARA-R2 TOBY-R2					
	SARA-U2 LISA-U2 LISA-U1					
Attributes	**Syntax**	**PIN required**	**Settings saved**	**Can be aborted**	**Response time**	**Error reference**
	full	Yes	No	No	-	+CME Error

18.50.1 Description

Allows the TE to specify a Packet Filter (PF) for a Traffic Flow Template (TFT) that is used in the GGSN for routing of down-link packets onto different QoS flows towards the TE (see the 3GPP TS 23.060 [10] and 3GPP TS 24.008 [12]). A TFT is identified by a <packet filter identifier> and each packet filter also has an <evaluation precedence index>. The set command specifies a Packet Filters to be added to the TFT stored in the MT and used for the context identified by <cid>. This command is effectively an extension of the +CGDCONT and +CGDSCONT AT commands.

The syntax +CGTFT=<cid> causes all of the Packet Filters in the TFT for the specified <cid> to become undefined.

Not all the parameters combinations are allowed in a Packet Filter, some may coexist but others are mutually exclusive. The possible combinations are specified in 3GPP TS 23.060 [10].

☞ TOBY-L4 / TOBY-L2 / MPCI-L2
After the PDP context activation, the information text response to the read command provides the configuration negotiated with the network (similarly to +CGTFTRDP and +CGCONTRDP AT commands).

☞ A valid packet filter must contain a unique identifier and a unique evaluation precedence index within all TFTs for one PDP address. The network will reject the activation of a secondary PDP context if the corresponding packet filter contains an identifier or an evaluation precedence index which is not unique within all TFTs for one PDP address.

18.50.2 Syntax

Type	Syntax	Response	Example
Set	AT+CGDCONT or AT+CGDSCONT are needed previously AT+CGTFT=[<cid>,<packet_filter_identifier>,<evaluation_precedence_index>[,<source_address_and_subnet_mask>[,<protocol_number_(ipv4)-next_header_(ipv6)>[,<destination_port_range>[,<source_port_range>[,<ipsec_security_parameter_index_(spi)>[,<type_of_service_(tos)_(ipv4)_and_mask-traffic_class_(ipv6)_and_mask>[,<flow_label (ipv6)>[,<direction>]]]]]]]]]	OK	AT+CGTFT=2,1,1,"109.115.183.216.255.255.0.0" OK
Read	AT+CGTFT?	+CGTFT: <cid>,<packet_filter_identifier>,<evaluation_precedence_index>,<source_address_and_subnet_mask>,<protocol_number_(ipv4)-next_header_(ipv6)>,<destination_port_range>,<source_port_range>,<ipsec_security_parameter_index_(spi)>,<type_of_service_(tos)_(ipv4)_and_mask-traffic_class_(ipv6)_and_mask>,<flow_label (ipv6)>[,<direction>] [+CGTFT: <cid>,<packet_filter_identifier>,<evaluation_precedence_index>,<source_address_and_subnet_mask>,<protocol_number_(ipv4)-next_header_(ipv6)>,<destination_port_range>,<source_port_range>,<ipsec_security_parameter_index_(spi)>,<type_of_service_(tos)_(ipv4)_and_mask-traffic_class_(ipv6)_and_mask>,<flow_label (ipv6)>[,<direction>] [...]] OK	+CGTFT: 2,1,1,"109.115.183.216.255.255.0.0",0,"0.0","0.0",00000000,"0.0",00000 OK
Test	AT+CGTFT=?	+CGTFT: <PDP_type>,(list of supported <packet_filter_identifier>s),(list of supported <evaluation_precedence_index>s),(list of supported <source_address_and_subnet_mask>s),(list of supported <protocol_number_(ipv4)-next_header_(ipv6)>s),(list of supported <destination_port_range>s),(list of supported <source_port_range>s),(list of supported <ipsec_security_parameter_index_(spi)>s),(list of supported <type_of_service_(tos)_(ipv4)_and_mask-traffic_class_(ipv6)_and_	+CGTFT: IP,(1-8),(0-255),("0.0.0.0.0.0.0.0-255.255.255.255.255.255.255.255"),(0-255),("0.0-65535.65535"),("0.0-65535.65535"),(00000000-ffffffff),("0.0-255.255"),(00000-00000) OK

Type	Syntax	Response	Example
		mask>s),(list of supported <flow_ label (ipv6)>s)[,(list of supported <direction>s)] [+CGTFT: <PDP_type>,(list of supported <packet_filter_ identifier>s),(list of supported <evaluation_precedence_index>s), (list of supported <source_address_ and_subnet_mask>s),(list of supported <protocol_number_ (ipv4)-next_header_(ipv6)>s),(list of supported <destination_port_ range>s),(list of supported <source_ port_range>s),(list of supported <ipsec_security_parameter_index_ (spi)>s),(list of supported <type_ of_service_(tos)_(ipv4)_and_ mask-traffic_class_(ipv6)_and_ mask>s),(list of supported <flow_ label (ipv6)>s)[,(list of supported <direction>s)] [...]] OK	

18.50.3 Defined values

Parameter	Type	Description
<cid>	Number	See <cid>
<PDP_type>	String	See <PDP_type>
<packet_filter_identifier>	Number	Packet filter: • Range: 1 - 8
<evaluation_precedence_index>	Number	Evaluation precedence index that is unique within all TFTs associated with the PDP contexts that share the same PDP address • Range: 0-255 (from highest evaluation precedence to lowest evaluation precedence)
<source_address_and_subnet_mask>	String	Specifies the source address and subnet mask attribute of a valid packet filter. Consists of dot-separated numeric (0-255) parameters on the form: • "a1.a2.a3.a4.m1.m2.m3.m4" for IPv4 • "a1.a2.a3.a4.a5.a6.a7.a8.a9.a10.a11.a12.a13.a14.a15.a16 .m1.m2.m3.m4.m5.m6.m7.m8.m9.m10 .m11.m12.m13.m14.m15.m16" for IPv6
<protocol_number_(ipv4)-next_header_ (ipv6)>	Number	Specifies the Protocol Number / Next Header attribute of a valid packet filter. It shall contain either an IPv4 Protocol Number or an IPv6 Next Header value. • Range: 0 -255
<destination_port_range>	String	String parameter given as dot-separated numbers on the form "f.t" that specifies the destination port range attribute of a valid packet filter: • Range: 0-65535
<source_port_range>	String	Dot-separated numbers on the form "f.t" that specifies the source port range attribute of a valid packet filter: • Range: 0-65535
<ipsec_security_parameter_index_(spi)>	Number	IPSec SPI attribute of a valid packet filter which is a 32-bit field. • Range: 0x00000000 - 0xFFFFFFFF
<type_of_service_(tos)_(ipv4)_and_mask-traffic_class_(ipv6)_and_mask>	String	Dot-separated numbers on the form "t.m" that specifies the Type of Service / Traffic Class and Mask attribute of a valid packet filter. It shall contain either an IPv4 TOS octet or an IPv6

Parameter	Type	Description
		Traffic Class octet along with a mask defining which of the 8 bits should be used for matching. • Range: 0-65535
<flow_label(ipv6)>	Number	Specifies the Flow Label attribute of a valid packet filter. It shall contain an IPv6 flow label, which is a 20-bit field. It only is valid for IPv6. • Range: 0x00000 - 0xFFFFF
<direction>	Number	Specifies the transmission direction in which the packet filter shall be applied: • 0: Pre Release 7 TFT Filter (see 3GPP TS 24.008 [12], table 10 .5.162) • 1: uplink • 2: downlink • 3: bidirectional (used for uplink and downlink)

18.50.4 Notes

LISA-U2 / LISA-U1

- The read command's information text response does not display the <source_address_and_subnet_mask> parameter entirely in dotted notation, i.e. characters [and] are used to separate subnet mask from source address.
- <flow_label(ipv6)>=00000 is only supported.

LISA-U200-00S / LISA-U200-01S / LISA-U200-02S / LISA-U200-52S / LISA-U200-62S / LISA-U230 / LISA-U260 / LISA-U270 / LISA-U1

- The IPv6 stack for an external context is not supported: hence the IPv6 version is not supported.

SARA-G300 / SARA-G310 / SARA-G340-00S / SARA-G340-01S / SARA-G350-00S / SARA-G350-00X / SARA-G350-01B / SARA-G350-01S / LEON-G1

- The IPv6 stack for an external context is not supported: hence the IPv6 version is not supported.

18.51 Read counters of sent or received PSD data +UGCNTRD

+UGCNTRD						
Modules	TOBY-L4					
	LARA-R2 TOBY-R2					
	SARA-U2 LISA-U2 LISA-U1					
	SARA-G3 LEON-G1					
Attributes	**Syntax**	**PIN required**	**Settings saved**	**Can be aborted**	**Response time**	**Error reference**
	full	Yes	No	No	-	+CME Error

18.51.1 Description

Allows reading the counters for total sent / received bytes for each defined context.

For each active <cid> one result code line is provided by the DCE.

☞ Only if the specific PDP context parameter values for a PDP context are set.

☞ The sent / received bytes are the gross payload evaluated by the protocol stack, therefore they comprise the TCP and IP header bytes and the packets used to open and close the TCP connection.

18.51.2 Syntax

Type	Syntax	Response	Example
Action	AT+UGCNTRD	+UGCNTRD: <cid>,<sent_sess_bytes>,<received_sess_bytes>,<sent_total_bytes>,<received_total_bytes> [[...]	AT+UGCNTRD +UGCNTRD: 1,100,0,100,0 OK

Type	Syntax	Response	Example
		+UGCNTRD: <cid>,<sent_sess_bytes>,<received_sess_bytes>,<sent_total_bytes>,<received_total_bytes>]] OK	
Test	AT+UGCNTRD=?	OK	

18.51.3 Defined values

Parameter	Type	Description
<cid>	Number	Local PDP context identifier; the range goes from 0 to 255
<sent_sess_bytes>	Number	Sent bytes for the current PSD session
<received_sess_bytes>	Number	Received GPRS session bytes for the current PSD session
<sent_total_bytes>	Number	Total sent bytes
<received_total_bytes>	Number	Total received bytes

18.52 Set/reset counter of sent or received PSD data +UGCNTSET

+UGCNTSET						
Modules	TOBY-L4					
	LARA-R2 TOBY-R2					
	SARA-U2 LISA-U2 LISA-U1					
	SARA-G3 LEON-G1					
Attributes	**Syntax**	**PIN required**	**Settings saved**	**Can be aborted**	**Response time**	**Error reference**
	partial	Yes	No	No	-	+CME Error

18.52.1 Description

Allows setting the counter for total sent/received bytes for each defined context to zero or any other offset value.

☞ Whenever the total counter for a <cid> is set (to zero or a certain value), the session counter for this <cid> will be set to zero.

☞ If the <cid> equals zero than the total counter for every defined context is set to zero. The offset parameters are ignored in this case.

18.52.2 Syntax

Type	Syntax	Response	Example
Set	AT+UGCNTSET=<cid>,[<total_bytes_sent_offset>,<total_bytes_received_offset>]	OK	AT+UGCNTSET=0,20,20 OK
Test	AT+UGCNTSET=?	+UGCNTSET: (range of <cid>s),(range of <total_bytes_sent_offset>),(range of <total_bytes_received_offset>) OK	+UGCNTSET: (0-255),(0-2147483646),(0-2147483646) OK

18.52.3 Defined values

Parameter	Type	Description
<cid>	Number	Local PDP context identifier: • TOBY-L4 - the range goes from 0 to 4 • LARA-R2 / TOBY-R2 / SARA-U2 / LISA-U2 / LISA-U1 / SARA-G3 - the range goes from 0 to 255 • LEON-G1 - the range goes from 0 to 3

Parameter	Type	Description
<total_bytes_sent_offset>	Number	Long number containing the offset of total sent bytes used for counting in the range 0-0x7FFFFFFE
<total_bytes_received_offset>	Number	Long number containing the offset of total received bytes used for counting in the range 0-0x7FFFFFFE.

18.52.4 Notes

LEON-G1

- It is not possible to set the counters of the internal PDP contexts.

18.53 Uplink user data plane configuration +UDCONF=9

+UDCONF=9						
Modules	TOBY-L2 MPCI-L2					
Attributes	**Syntax**	**PIN required**	**Settings saved**	**Can be aborted**	**Response time**	**Error reference**
	full	No	NVM	No	-	+CME Error

18.53.1 Description

Enables or disables the uplink user data plane. When the uplink data traffic is disabled, the module will not be able to transmit data to the cellular network.

In bridge mode the uplink packets are forwarded to the active EPS bearer/PDP context based on the packet source IP address. When the source IP address does not match to the IP address of any active EPS bearers/PDP context, the module will drop the packet. This uplink data plane filtering can be disabled with <UUDP_enable>=2. The filter can be disabled only in bridge mode. The filter will be restored after the system reboot when the module is set in router mode (for more details, see the AT+UBMCONF command).

The new setting is applied at run time, is saved in NVM and remains valid also after the module reboot.

☞ The AT command does not affect the functionality of AT+UTGSINK command.

18.53.2 Syntax

Type	Syntax	Response	Example
Set	AT+UDCONF=9,<UUDP_enable>	OK	AT+UDCONF=9,1 OK
Read	AT+UDCONF=9	+UDCONF: 9,<UUDP_enable> OK	AT+UDCONF=9 +UDCONF: 9,1 OK

18.53.3 Defined values

Parameter	Type	Description
<UUDP_enable>	Number	Configures the uplink user data plane feature: • 0: uplink user data plane disabled • 1 (factory-programmed value): uplink user data plane enabled • 2: uplink user data plane filter disabled

18.53.4 Notes

TOBY-L200 / TOBY-L201 / TOBY-L210-00S / TOBY-L210-02S / TOBY-L210-03S / TOBY-L210-60S / TOBY-L210-62S / TOBY-L220 / TOBY-L280 / MPCI-L2

- <UUDP_enable>=2 is not supported.

18.54 Feature Group Indicators (FGI) settings +UFGI

+UFGI						
Modules	TOBY-L4 TOBY-L200-03A TOBY-L200-03S TOBY-L210-03A TOBY-L210-03S TOBY-L210-62S TOBY-L280-03A TOBY-L280-03S MPCI-L200-03S MPCI-L210-03S MPCI-L280-03S					
	LARA-R2 TOBY-R2					
Attributes	**Syntax**	**PIN required**	**Settings saved**	**Can be aborted**	**Response time**	**Error reference**
	partial	No	NVM	No	-	+CME Error

18.54.1 Description

Displays the contents of the FGI bits stored on the module that are reported during the LTE registration to the network as part of the UE-EUTRA-Capability information element. The description of each bit can be found in 3GPP TS 36.331 [109], Annex B.

18.54.2 Syntax

Type	Syntax	Response	Example
Read	AT+UFGI?	+UFGI: <FGI>,<FGI_rel9>,<FGI_rel10> OK	+UFGI: 4291821242,3229614080,3407872 OK

18.54.3 Defined values

Parameter	Type	Description
<FGI>	Number	32 bits number that describes bits 1-32 of featureGroupIndicators. The leftmost bit represents index 1 in the field featureGroupIndicators.
<FGI_rel9>	Number	32 bits number that describes bits 33-64 of featureGroupIndRel9Add. The leftmost bit represents index 33 in the field featureGroupIndRel9Add.
<FGI_rel10>	Number	32 bits number that describes bits 101-132 of featureGroupIndRel10Add. The leftmost bit represents index 101 in the field featureGroupIndRel10Add.

18.54.4 Notes

TOBY-L2 / MPCI-L2 / LARA-R2 / TOBY-R2

- <FGI_rel10> is not supported.

19 System features

19.1 Firmware installation +UFWINSTALL

+UFWINSTALL						
Modules	TOBY-L4 TOBY-L200-02S TOBY-L200-03A TOBY-L200-03S TOBY-L201 TOBY-L210-02S TOBY-L210-03A TOBY-L210-03S TOBY-L210-62S TOBY-L220 TOBY-L280 MPCI-L200-02S MPCI-L200-03S MPCI-L201 MPCI-L210-02S MPCI-L210-03S MPCI-L220 MPCI-L280					
	LARA-R2 TOBY-R2					
	SARA-U201-04A SARA-U201-04B SARA-U201-04X LISA-U200-83S LISA-U201-83S					
Attributes	**Syntax**	**PIN required**	**Settings saved**	**Can be aborted**	**Response time**	**Error reference**
	full	No	No	No	-	FW Install Error

19.1.1 Description

Triggers the FW installation procedure, starting from the file (update binary file) stored in the module file system. It could be used as a part of implementation of the FOTA procedure. The command causes a SW system reset with network deregistration.

During the update process, the device cannot be used to make calls, even emergency calls. The update process is fault tolerant, even if the battery is suddenly removed.

At the end of a successful installation, the main firmware software boots up, NVM and profiles data are set to the factory-programmed values of the new firmware version and the SIM is reset (the PIN will be required if enabled).

☞ Once the command has been sent correctly, the FW resets and at the next boot-up, the FW install will start.

☞ In case of power loss during the install phase, at the next module wake-up a fault is detected and the module remains in Firmware Install Mode until the end of the procedure (install terminated).

The command syntax differs depending on the module: see the corresponding subsection for the correct command handling.

☞ LARA-R2 / TOBY-R2 / SARA-U2 / LISA-U2
The firmware can be updated using either the UART interface with configurable baud rate (only one port is available) or the USB interface with configurable USB instance.

☞ LARA-R2 / TOBY-R2 / SARA-U2 / LISA-U2
During the update operations, the +UUFWINSTALL URC displays the progress indication and the result operation on the interface chosen via the +UFWINSTALL command. When the FW update is completed, a URC will notify the final result of the operation.

☞ TOBY-L4 / TOBY-L2 / MPCI-L2 / LARA-R2 / TOBY-R2 / SARA-U2 / LISA-U2
For more details, see the Firmware Update Application Note [86].

☞ TOBY-L4
The firmware can be updated over the USB CDC-ACM interface by means of the +UDWNFILE AT command. After downloading the update file, the FW installation AT command can be postponed even after a module reboot.

19.1.2 TOBY-L4 syntax

Type	Syntax	Response	Example
Set	AT+UFWINSTALL	OK	AT+UFWINSTALL OK
Test	AT+UFWINSTALL=?	OK	OK
URC		+UUFWINSTALL: <status_install>	

19.1.3 TOBY-L4 defined values

Parameter	Type	Description
<status_install>	Number/ String	Provide the installation start message ("REBOOT" string) and the update result code (see Firmware install final result codes).

19.1.4 TOBY-L2 / MPCI-L2 syntax

Type	Syntax	Response	Example
Set	AT+UFWINSTALL=<md5>	OK UFWINSTALL REBOOT	AT+UFWINSTALL=a07a553420 1b2e42dd2d964920e57319 OK UFWINSTALL REBOOT
Test	AT+UFWINSTALL=?	OK	OK

19.1.5 TOBY-L2 / MPCI-L2 defined values

Parameter	Type	Description
<md5>	Number	32 hexadecimal number

19.1.6 LARA-R2 / TOBY-R2 / SARA-U2 / LISA-U2 syntax

Type	Syntax	Response	Example
Set	AT+UFWINSTALL=<filename>[, <Serial_Port_Number>[, <BaudRate>]]	OK	AT+UFWINSTALL="update_FW_90 _to_91.upd",1,115200 OK
Test	AT+UFWINSTALL=?	+UFWINSTALL: "filename",(list of supported <Serial_Port_Number>s), (list of supported <BaudRate>s) OK	+UFWINSTALL: "filename",(0,1,4-6), (19200,38400,57600,115200,23040 0,460800,921600) OK
URC		+UUFWINSTALL: <progress_ install>	

19.1.7 LARA-R2 / TOBY-R2 / SARA-U2 / LISA-U2 defined values

Parameter	Type	Description
<filename>	String	The update filename from version 0 to version 1 which has been previously downloaded in FS. The update file can have different extension
<Serial_Port_ Number>	Number	Serial interface where the progress percentage and the information text responses will be sent: • 0: no info will be shown • 1: UART interface • 4: USB1 • 5: USB2 • 6: USB3 If omitted, the command will take as default value for <Serial_Port_Number> the port where the command is issued.
<BaudRate>	Number	Available baud rates expressed in b/s: • 19200 • 38400 • 57600 • 115200 • 230400 • 460800 • 921600 • 3000000 • 3250000 • 6000000 • 6500000

Parameter	Type	Description
		When a USB interface is selected, the parameter has no effect in the FW install configuration. If omitted, the command will take as default value for <BaudRate> the baud rate of the port where the command is issued.
<progress_install>	Number	Provide the installation progress from 1 to 100 and the update result (see FWINSTALL error result codes).

19.1.8 Notes

TOBY-L4

- Store the update file into the module before starting the FW installation with the +UFWINSTALL AT command. The procedure for storing is up to the user (via +UDWNFILE AT command).
- The +UFWINSTALL AT command checks only for the presence of the update file. Consistency checks are done during the update procedure. If checks fail, the update file is left in the module file system and a proper URC with the error result code is issued after the final reboot (see Firmware install final result codes).
- After the command is issued, the module reboots and starts the FW installation process which will take about 3-4 minutes long. During the update process, the module reboots multiple times. No intermediate result codes are issued on the terminal during this phase.
- At the end of the FW update process the module reboots again with the new firmware installed; NVM, profiles and the file system are restored to the factory-programmed values.
- The final result code will be issued on all the available interfaces after the FW update success or failure.
- If the FW update is successful, the update file is removed.

TOBY-L2 / MPCI-L2

- After the command is issued, the module reboots and starts the install process which will take about 1 minute long. No result codes are issued on the terminal during this phase. At the end of the update process the module reboots again with the new firmware installed, NVM, profiles and the file system restored to the factory-programmed values.
- If the <md5> parameter is provided correctly (32 hex digits), then the check is done with the update file stored in the module.
- If the <md5> parameter is provided incorrectly (less digits, more digits, or at least one not hex digits), then the install will not be started, and the module will exit from Firmware Install Mode and the actual will continue to run. A proper error result code will be issued on the same channel where the command has been sent.
- Store the update file into the module cache folder before starting the install with +UFWINSTALL. Otherwise the "update file not found" error result code is issued. The procedure for storing is up to the user (via +UFTPC or +UHTTPC). These commands erase the cache content before storing the new update file.
- This command is not available if the encryption is enabled by means of the +USECCFG AT command. For further information, see the +UFWSINSTALL AT command.

TOBY-L200-02S / TOBY-L201-01S / TOBY-L210-02S / TOBY-L210-62S / TOBY-L220 / TOBY-L280 / MPCI-L200 / MPCI-L201-01S / MPCI-L210 / MPCI-L220 / MPCI-L280

- The download of the FOTA file can be performed only by means of +UFTPC AT command.

TOBY-L200-03S / TOBY-L201-02S / TOBY-L210-03A / TOBY-L210-03S / MPCI-L201-02S

- On TOBY-L200-03S-00, TOBY-L201-02S-00, TOBY-L210-03S-00, TOBY-L210-03A-00 and MPCI-L201-02S-00 products, the download of the FOTA file can be performed only by means of +UFTPC AT command.

LARA-R2 / TOBY-R2 / SARA-U2 / LISA-U2

- Store the update file into the module file system before starting the install with +UFWINSTALL. Otherwise the "FFS file not found" error result code is issued. The procedure for FS storing is up to the user (via FTP, +UDWNFILE). When the new FW has been installed, the user can optionally delete the "filename" using the file system AT commands (for more details see the +UDELFILE).

Command	Response	Description
AT+UFWINSTALL="update_FW_90_to_91.upd",1,115200		The "OK" final result code is printed out just before the FW reset.

Command	Response	Description
	+UUFWINSTALL: 1	The progression of installation is incremental (the subsequent increment of <progress_install> can be more than 1).
	+UUFWINSTALL: 2	
	+UUFWINSTALL: 3	
	+UUFWINSTALL: 4	
	....	
	+UUFWINSTALL: 9	
	+UUFWINSTALL: 12	
	+UUFWINSTALL: 15	
	....	
	+UUFWINSTALL: 99	
	+UUFWINSTALL: 100	The installation is done when the percentage ends with +UUFWINSTALL: 100.
	+UUFWINSTALL: 128	The last URC with a value greater than 100 indicates the update operation result (e.g. 128 means operation completed with success (for more details see the FWINSTALL error result codes).

Table 29: +UFWINSTALL example

SARA-U2 / LISA-U2

- <BaudRate>= 3000000, 3250000, 6000000, 6500000 are not supported.

19.2 Firmware update Over AT (FOAT) +UFWUPD

+UFWUPD						
Modules	TOBY-L2 MPCI-L2					
	LARA-R2 TOBY-R2					
	SARA-U2 LISA-U2 LISA-U1					
	SARA-G4 SARA-G3 LEON-G1					
Attributes	**Syntax**	**PIN required**	**Settings saved**	**Can be aborted**	**Response time**	**Error reference**
	partial	No	No	No	-	FOAT Error

19.2.1 Description

Triggers the firmware update using the Xmodem or Xmodem-1k protocol.

The command syntax differs depending on the module series: see the corresponding subsection for the correct command handling.

☞ The errors (data corruption, data loss, etc.) during the Update phase are internally handled by the Xmodem protocol itself; for more details about the error result codes, see FOAT error result codes.

☞ If no data comes to the module after having issued the AT+UFWUPD command, up to ten NACK are sent and then Firmware Update Mode is dropped out coming back to normal mode; the FW is unchanged and still useable (ERROR1).

☞ LARA-R2 / TOBY-R2 / SARA-U2 / LISA-U2 / LISA-U1 / SARA-G4 / SARA-G3 / LEON-G1
NVM parameters and profiles (if affected by the update process) are set to the factory-programmed values.

☞ TOBY-L2 / MPCI-L2 / LARA-R2 / TOBY-R2 / SARA-U2 / LISA-U2 / LISA-U1 / SARA-G4 / SARA-G3 / LEON-G1
For more details, see the u-blox Firmware Update Application Note [86].

19.2.2 TOBY-L2 / MPCI-L2 description

Making use of the **bin** file and the md5 signature officially released with the FW release version triggers the firmware and File System update types using the Xmodem and Xmodem-1k protocols.

Maximum errors allowed (timeout, bad data) is 10, after that Xmodem exits with this error result code:

ERROR1

TOBY-L200-00S / TOBY-L201 / TOBY-L210-00S / TOBY-L210-60S / MPCI-L200-00S / MPCI-L201 / MPCI-L210-00S / MPCI-L210-60S
If 10 errors are provided, the Xmodem exits with these strings:
"too many errors; giving up"
ERROR1

At the end of the download procedure, the module reboots and starts the update process which will take about 1 minute long. No result codes are issued on the terminal during this phase. At the end of the update process, the module reboots again with the new firmware installed, NVM, profiles and the file system restored to the factory-programmed values.

Once the update file has been downloaded, if the <md5> parameter is provided correctly (32 hex digits), then the MD5 check is performed.

If the <md5> parameter is provided incorrectly (less digits, more digits, or at least one not hex digits), then the download will not be started, and the module will exit from Firmware Update Mode and the current FW will be started. A proper error result code will be issued on the same channel where the command has been sent.

In case of power loss during the update phase, at the next module wake-up a fault is detected and the module remains in Firmware Update Mode expecting that the upload restarts from Xmodem handshake.

If the FW download ends with an ERROR1 condition, the module exits from Firmware Update Mode and returns to normal mode since the FW is still unchanged and usable (FW not corrupted by previous download process).

TOBY-L200-00S / TOBY-L210-00S / TOBY-L210-60S / MPCI-L200-00S / MPCI-L210-00S / MPCI-L210-60S
The <md5> parameter is not mandatory.

19.2.3 TOBY-L2 / MPCI-L2 syntax

Type	Syntax	Response	Example
Set	AT+UFWUPD=<md5>	+UFWUPD: ONGOING CCC... OK UFWUPD REBOOT	AT+UFWUPD=a07a553420 1b2e42dd2d964920e57319 +UFWUPD: ONGOING CCC... OK UFWUPD REBOOT

19.2.4 TOBY-L2 / MPCI-L2 defined values

Parameter	Type	Description
<md5>	Number	32 hexadecimal number

19.2.5 LARA-R2 / TOBY-R2 / SARA-U2 / LISA-U2 / LISA-U1 / SARA-G3 / LEON-G1 description

Depending on the <filetype> parameter and the corresponding file format, the update will affect:

- Module firmware: the firmware can be updated only using the file in **fls** format
- NVM and profiles: they are reset to the factory-programmed values using either the file in **dffs** or in **fls** format
- FS: it is updated only using the file in **dffs** format

In case of power loss during the update, at the next module wake-up a fault is detected and the module remains in Firmware Update Mode expecting that the upgrade restarts from the Xmodem handshake; the FW is corrupted and useless (ERROR2).

If the FW upgrade ends with an ERROR condition, the module remains in Firmware Update Mode expecting that the upgrade restarts from the Xmodem handshake; the FW is corrupted and useless (ERROR2).

LARA-R2 / TOBY-R2 / SARA-U201-03A / SARA-U201-03B / SARA-U201-03X / SARA-U201-63B / LISA-U200-00S / LISA-U200-01S / LISA-U230 / LISA-U260-01S / LISA-U270-01S
The file in fls format contains the File System image. Any <filetype> value of the +UFWUPD command which involves the file system update will require the **fls** file.

SARA-G4 / SARA-G3

The NVM and the profiles are not updated with the file in dffs format.

☞ LEON-G1
The file in fls and dffs formats do not allow updating the NVM and the profiles.

19.2.6 LARA-R2 / TOBY-R2 / SARA-U2 / LISA-U2 / LISA-U1 / SARA-G3 / LEON-G1 syntax

Type	Syntax	Response	Example
Set	AT+UFWUPD=<filetype>[,<speed>]	+UFWUPD: ONGOING (Sent at new baud rate, if specified) CCC<NACK><NACK><NACK><NACK><NACK><NACK><NACK><NACK><NACK><NACK><NACK> OK	AT+UFWUPD=0 +UFWUPD: ONGOING CCC<NACK><NACK><NACK><NACK><NACK><NACK><NACK><NACK><NACK><NACK><NACK> OK
Test	AT+UFWUPD=?	+UFWUPD: (list of supported <filetype>s),(list of supported <speed>s) OK	+UFWUPD: (0-2),(115200,230400,460800,921600) OK

19.2.7 LARA-R2 / TOBY-R2 / SARA-U2 / LISA-U2 / LISA-U1 / SARA-G3 / LEON-G1 defined values

Parameter	Type	Description
<filetype>	Number	Download type: • 0: firmware image update (*.fls file) • 1: File System image update (*.dffs or *.fls file) • 2: firmware and File System image update (*.fls file)
<speed>	Number	Baud rate in b/s. Allowed values: • 115'200 (default value) • 230'400 • 460'800 • 921'600 • 3'000'000 • 3'250'000 • 6'000'000 • 6'500'000

19.2.8 SARA-G4 description

Depending on the <filetype> parameter and the corresponding file format, the update will affect:

- Module firmware: the firmware can be updated only using the file in **pack** format
- FS: it is updated only using the file in **pack** format

☞ In case of power loss during the update, at the next module wake-up a fault is detected and the module remains in Firmware Update Mode expecting that the upgrade restarts from the Xmodem handshake; the FW is corrupted and useless (ERROR2).

☞ If the FW upgrade ends with an ERROR condition, the module remains in Firmware Update Mode expecting that the upgrade restarts from the Xmodem handshake; the FW is corrupted and useless (ERROR2).

19.2.9 SARA-G4 syntax

Type	Syntax	Response	Example
Set	AT+UFWUPD=<filetype>[,<speed>]	+UFWUPD: ONGOING (Sent at new baud rate, if specified) CCC<NACK><NACK><NACK><NACK><NACK><NACK><NACK><NACK><NACK><NACK><NACK> OK	AT+UFWUPD=0 +UFWUPD: ONGOING CCC<NACK><NACK><NACK><NACK><NACK><NACK><NACK><NACK><NACK><NACK><NACK> OK

Type	Syntax	Response	Example
Test	AT+UFWUPD=?	+UFWUPD: (list of supported <filetype>s),(list of supported <speed>s) OK	+UFWUPD: (0-1),(115200,230400, 460800,921600) OK

19.2.10 SARA-G4 defined values

Parameter	Type	Description
<filetype>	Number	Download type: • 0: firmware image update (*.pack file) • 1: firmware and File System image update (*.pack file)
<speed>	Number	Baud rate in b/s. Allowed values: • 115'200 (default value) • 230'400 • 460'800 • 921'600

19.2.11 Notes

TOBY-L2 / MPCI-L2

- This command is not available if the encryption is enabled by means of the +USECCFG AT command. For further information, see the +UFWSINSTALL AT command.

LARA-R2 / TOBY-R2

- If <filetype>=2 make sure the file contains both the firmware and file system images.

SARA-U2 / LISA-U2 / LISA-U1 / SARA-G3 / LEON-G1

- <speed>=3'000'000, 3'250'000, 6'000'000, 6'500'000 are not supported.

SARA-U201-04A / SARA-U201-04B / SARA-U201-04X / SARA-U270-04B

- The FW update process is not allowed on the AUX UART interface.

SARA-U260 / SARA-U270 / SARA-U280 / LISA-U200-00S / LISA-U200-03S / LISA-U200-83S / LISA-U201 / LISA-U1 / LEON-G1

- <filetype>=2 is not supported.

SARA-G3

- The FW update process is not allowed on the AUX UART interface (where present).
- <filetype>=2 is not supported.

SARA-G300 / SARA-G310

- <filetype>=1 is not supported.

19.3 Firmware installation with signature verification +UFWSINSTALL

+UFWSINSTALL						
Modules	TOBY-L200-03A TOBY-L200-03S TOBY-L201-02S TOBY-L210-03A TOBY-L210-03S TOBY-L280-03A TOBY-L280-03S MPCI-L201-02S					
Attributes	**Syntax**	**PIN required**	**Settings saved**	**Can be aborted**	**Response time**	**Error reference**
	full	No	No	No	-	FW install with signature verification Error +CME Error

19.3.1 Description

Triggers the FW installation procedure with encrypted signature verification, starting from the file (update binary file) stored in the module file system. Provides basic facilities required to implement a FOTA procedure with elevated security by means of encrypted signature verification.

During the FW installation procedure, the module:

- Verifies the encrypted signature of the FW update file (update binary file) stored in the module file system. The signature verification procedure is as follows:
  - The <usecmng_iname> indicated certificate or public key is used to decrypt the <base64_signature> signature and retrieve the SHA-256 digest (DIGEST_1).
  - A SHA-256 digest (DIGEST_2) is generated from the FW update file (update binary file) stored in the file system.
  - The two digests (DIGEST_1 and DIGEST_2) are compared and if match the signature is successfully verified.
  - If any of the described steps fails the signature verification procedure fails and the "signature verification error, update failed" error result code will be reported.
- Checks and handles syntax, input parameters and signature verification errors in the following way:
  - The new FW is not installed and the old FW is not modified in any way.
  - The module regains the AT command mode functionality and continues to respond to AT commands.
- Executes a SW system reset with network de-registration.
- Does not issue any result codes or provides any progress information on the terminal.
- Withholds the possibility to make any sort of calls (even emergency calls).
- Executes a SW reboot (once concluded the FW installation procedure) and boots with the new firmware installed, NVM, profiles and the file system restored to the factory-programmed setting.
- Takes about 60 s to complete the FW installation procedure.
- Remains in FW Installation Mode until the FW installation procedure is successfully concluded. The FW installation procedure:
  - is fault tolerant; restarts the FW installation procedure at next boot if a fault is detected during the FW installation procedure.
  - is power loss tolerant; restarts the FW installation procedure at next power on if a power loss occurred during the FW installation procedure.

☞ FW installation procedure prerequisites:

- A FW update file (update binary file) stored in the module file system. Store the update file into the module file system folder before starting the FW installation procedure with +UFWSINSTALL otherwise the "update file not found" error result code is reported. The procedure for storing the update file in file system is up to the user (via +UFTPC, +UHTTPC or +UDWNFILE). These commands erase the old before storing the new update file.
- A signature verification certificate or signature verification public key imported by means of the +USECMNG AT command.
- A base64 encoded signature string generated from the FW update file being installed using the SHA-256 digest and RSA algorithm.

☞ This command is only available if the encryption is enabled with the use of +USECCFG AT command. If the encryption is disabled the +UFWSINSTALL AT command will provide an error result code (CME ERROR: 4 / CME ERROR: not supported); only +UFWINSTALL or +UFWUPD AT commands shall be issued to perform a FW installation procedure.

☞ TOBY-L200-03S / TOBY-L201-02S / TOBY-L210-03A / TOBY-L210-03S / TOBY-L280-03S / MPCI-L201-02S
The command is not supported by TOBY-L200-03S-00, TOBY-L201-02S-00, TOBY-L210-03S-00, TOBY-L210-03A-00, TOBY-L280-03S-00, MPCI-L201-02S-00.

19.3.2 Syntax

Type	Syntax	Response	Example
Set	AT+UFWSINSTALL=<usecmng_iname>,<base64_signature>	OK UFWSINSTALL REBOOT	AT+UFWSINSTALL="vc_iname" , "UExFQVNFXO5PVEVfVEhBVF9U0 SEITXITXOFfQkFTRV82NF9FTkN0 PREVEX1NJRO5BVFVSRV9FWEF0 NUExFX1dISUNIX1dJTExfTk9UX1N0 UQVJUX1RIRV9GSVJNVOFSRV9V0 UERBVEVfUFJPQOVTU19CVVRfV0 OIMTF9QUk9EVUNFXOFOX1ZFUkI0 GQOFUSU9OXOVSUk9SXOVWRU0

Type	Syntax	Response	Example
			5fVOhFTI9VUOVEX1dJVEhfQV9W0QUxJRF9DRVJUSUZJQOFURV9B0TkRfQV9WQUJRF9GSVJNVOFSR0V9VUERBVEVfRkIMRV9TVE9SR0URfSU5fVEhFIFJJROhUXOZJTR0fQV9W=="
			OK
			UFWSINSTALL REBOOT
Test	AT+UFWSINSTALL=?	OK	AT+UFWSINSTALL=?
			OK

19.3.3 Defined values

Parameter	Type	Description
<usecmng_iname>	String	USECMNG internal name - unique identifier of an imported certificate or public key which will be used for signature verification (max. length 200 chars).
<base64_signature>	String	BASE64 encoded SHA-256 RSA encrypted digital signature of the FW update file stored in file system.

19.4 Antenna detection +UANTR

+UANTR						
Modules	TOBY-L4 TOBY-L200-02S TOBY-L200-03A TOBY-L200-03S TOBY-L201-02S TOBY-L210-02S TOBY-L210-03A TOBY-L210-03S TOBY-L210-62S TOBY-L220 TOBY-L280					
	LARA-R2 TOBY-R2					
	SARA-U2 LISA-U2 LISA-U1					
	SARA-G4 SARA-G340 SARA-G350 SARA-G350-53S LEON-G1					
Attributes	**Syntax**	**PIN required**	**Settings saved**	**Can be aborted**	**Response time**	**Error reference**
	full	No	No	No	-	+CME Error

19.4.1 Description

Measures the DC component of load of the cellular antenna (the GPS antenna is RFU). The antenna load is expressed in kOhm.

19.4.2 Syntax

Type	Syntax	Response	Example
Set	AT+UANTR=[<antenna_id>]	+UANTR: <antenna_id>,<antenna_load>	AT+UANTR=0
		OK	+UANTR: 0,10
			OK
Test	AT+UANTR=?	+UANTR: (list of supported <antenna_id>s)	+UANTR: (0)
		OK	OK

19.4.3 Defined values

Parameter	Type	Description
<antenna_id>	Number	Antenna identifier (optional parameter) • 0 (default value): cellular antenna • 1: GPS antenna (RFU)
<antenna_load>	Number	Measured value in kOhm of the antenna load with a resolution of 1 kOhm. The range goes from -1 to 53 (only integer values can be assumed), where: • -1: open circuit • 0: short circuit • 1: 1 kOhm (minimum limit of the measurement range) ...

Parameter	Type	Description
		• 53: 53 kOhm (maximum limit of the measurement range)

19.4.4 Notes

- The load resistor values below the minimum limit of 1 kOhm are identified as short circuit (<antenna_load>=0), while values above the maximum limit of 53 kOhm are identified as open circuit (<antenna_load>=-1).
- The reported value could differ from the real resistance value of the diagnostic resistor mounted inside the antenna assembly due to antenna cable length, antenna cable capacity and the measurement method.

19.5 RX antenna selection +UANT

+UANT						
Modules	TOBY-L4 TOBY-L200-02S TOBY-L200-03A TOBY-L200-03S TOBY-L201 TOBY-L210-02S TOBY-L210-03A TOBY-L210-03S TOBY-L210-62S TOBY-L220 TOBY-L280 MPCI-L200-02S MPCI-L200-03S MPCI-L201 MPCI-L210-02S MPCI-L210-03S MPCI-L220 MPCI-L280					
	LARA-R2 TOBY-R2					
Attributes	**Syntax**	**PIN required**	**Settings saved**	**Can be aborted**	**Response time**	**Error reference**
	partial	No	No	No	-	+CME Error

19.5.1 Description

Allows user to select the active antenna receiver path. The user can activate the primary antenna receiver only, the secondary antenna receiver only, or both antenna receiver paths together. The command can be used for the execution of receiver sensitivity measurements like the Total Isotropic Sensitivity (TIS) test. The command execution does not affect the antenna transmitting path.

19.5.2 Syntax

Type	Syntax	Response	Example
Set	AT+UANT=<setting>,<value>	OK	AT+UANT=0,1 OK
Test	AT+UANT=?	+UANT: (list of supported <setting>s),(list of supported <value>s) OK	+UANT: (0),(0-2) OK

19.5.3 Defined values

Parameter	Type	Description
<setting>	Number	Setting type: • 0: RX path selection
<value>	Number	Selects which antenna RX path to use: • 0: both antennas • 1: primary antenna RX path only • 2: secondary antenna RX path only

19.5.4 Notes

- To be sure to perform a test in a reliable starting condition, it is suggested to issue AT+CFUN=15 (silent reset) command before each test.

TOBY-L2 / MPCI-L2

- The module must be connected on a 3G network or registered on an LTE network, otherwise an error result code is returned
- The PIN insertion is mandatory.

TOBY-L4 / LARA-R202 / LARA-R280 / TOBY-R2

- Select the antenna when the module is deregistered from network and the 3G diversity is disabled.

- Re-enable the RX diversity after the tests.

LARA-R203 / LARA-R204 / LARA-R211 / LARA-R220

- Select the antenna when the module is deregistered from network.
- Re-enable the RX diversity after the tests.

19.6 Rx diversity +URXDIV

+URXDIV						
Modules	TOBY-L4 TOBY-L200-02S TOBY-L200-03A TOBY-L200-03S TOBY-L201-02S TOBY-L210-02S TOBY-L210-03A TOBY-L210-03S TOBY-L210-62S TOBY-L220 TOBY-L280 MPCI-L200-02S MPCI-L200-03S MPCI-L201-02S MPCI-L210-02S MPCI-L210-03S MPCI-L220 MPCI-L280					
	LARA-R202 LARA-R280 TOBY-R2					
	LISA-U230					
Attributes	**Syntax**	**PIN required**	**Settings saved**	**Can be aborted**	**Response time**	**Error reference**
	partial	No	NVM	No	-	+CME Error

19.6.1 Description

Controls the 3G Rx diversity and 2G Downlink Advanced Receiver Performance (DARP) during runtime. The features can be enabled or disabled during operation. Specifying the 2G DARP is optional.

For more details, see 3GPP TS 25.101 [64] and 3GPP TS 45.005 [65].

☞ u-blox cellular modules are certified according to all the capabilities and options stated in the Protocol Implementation Conformance Statement document (PICS) of the module. The PICS, according to 3GPP TS 51.010-2 [84], 3GPP TS 34.121-2 [85], 3GPP TS 36.521-2 [115] and 3GPP TS 36.523-2 [116], is a statement of the implemented and supported capabilities and options of a device. If the user changes the command settings during the certification process, the PICS of the application device integrating a u-blox cellular module must be changed accordingly.

19.6.2 Syntax

Type	Syntax	Response	Example
Set	AT+URXDIV=<RxDiv3G>[,<DARP>]	OK	AT+URXDIV=1,3 OK
Read	AT+URXDIV?	+URXDIV: <RxDiv3G>,<DARP> OK	+URXDIV: 1,3 OK
Test	AT+URXDIV=?	+URXDIV: (list of supported <RxDiv3G>s),(list of supported <DARP>s) OK	+URXDIV: (0-1),(1-3) OK

19.6.3 Defined values

Parameter	Type	Description
<RxDiv3G>	Number	Rx diversity configuration. Allowed values: • 0: 3G Rx diversity disabled • 1 (factory-programmed value): 3G Rx diversity enabled
<DARP>	Number	DARP phase and mode. Allowed values: • 1: DARP phase I • 2: DARP phase II - traffic only • 3 (default and factory-programmed value): DARP phase II - always on

19.6.4 Notes

- It is possible to set the parameters only if the module is not registered with the network.
- The diversity receiver is provided to improve the quality and reliability of the wireless link on all 2G and 3G operating bands except 2G DCS 1800.

TOBY-L4 / TOBY-L2 / MPCI-L2 / LARA-R2 / TOBY-R2

- The <DARP> parameter is not supported.
- DARP phase II is not supported.

19.7 ADC read command +UADC

+UADC						
Modules	LEON-G1					
Attributes	**Syntax**	**PIN required**	**Settings saved**	**Can be aborted**	**Response time**	**Error reference**
	full	No	No	No	-	+CME Error

19.7.1 Description

Reads the current value of the specified ADC, given in mV. The syntax and the parameters range are shown in the response to the test command if ADC are supported; if no ADC is supported by the modem, an error is returned.

19.7.2 Syntax

Type	Syntax	Response	Example
Set	AT+UADC=<adc_id>	+UADC: <adc_id>,<adc_val> OK	AT+UADC=0 +UADC: 0,480 OK
Test	AT+UADC=?	+UADC: (range of <adc_id>s) OK	+UADC: (0-1) OK

19.7.3 Defined values

Parameter	Type	Description
<adc_id>	Number	ADC identifier
<adc_val>	Number	Current ADC value measured on the specified ADC pin, typical range [0-1920 mV]

19.8 Power saving control (Power SaVing) +UPSV

+UPSV						
Modules	TOBY-L4006 TOBY-L4106 TOBY-L4206 TOBY-L4906-01A TOBY-L4906-51A TOBY-L2 MPCI-L2					
	LARA-R2 TOBY-R2					
	SARA-U2 LISA-U2 LISA-U1					
	SARA-G4 SARA-G3 LEON-G1					
Attributes	**Syntax**	**PIN required**	**Settings saved**	**Can be aborted**	**Response time**	**Error reference**
	partial	No	Profile	No	-	+CME Error

19.8.1 TOBY-L4 Description

Sets the USB and Ethernet power saving configuration, but it has a global effect on the module power saving configuration:

- If the power saving is enabled (+UPSV: 1), the module enters the S3 state whenever possible after command defined timeouts. To enter the S3 state the USB interface must be in suspended or disconnected state, the Ethernet interface must be in suspended state, too, and air interface must be idle;
- If the power saving is disabled (+UPSV: 0), the module remains always in the S0 state.

After the Ethernet autosuspend timeout since the last Ethernet RX/TX activity, TCP connections are frozen and the Ethernet interface enters the suspended low power state. To exit this state an Ethernet magic packet Wake-on-LAN (WoL) shall be explicitly sent by the host side. Else the driver can wake up the Ethernet interface by ioctl command DWC_ETH_QOS_RUNTIME_RESUME = 63 system call by any application on the module side.

All parameters are optional, thus not modify them, but at least one parameter shall be specified as well when the command is issued, i.e. AT+UPSV=,, (with an Ethernet PHY interface) or AT+UPSV=, are illegal.

☞ The AT command setting is stored in the NVM and persistent through reboot and power cycles.

☞ Syntax changes may occur if the Ethernet PHY detection changes at the module boot time: if no external Ethernet PHY is detected (not installed or just not supplied), the <autosuspend> parameter is not applicable. Dynamic changes after the boot time are not handled.

19.8.2 TOBY-L4 Syntax

Type	Syntax	Response	Example
Set	AT+UPSV=[<mode>],[<Timeout>][,[<autosuspend>]]	OK	AT+UPSV=1,2000,30000 OK
Read	AT+UPSV?	+UPSV: <mode>,<Timeout>,<autosuspend> OK	+UPSV: 1,5000,10000 OK
Test	AT+UPSV=?	+UPSV: (list of supported <mode>s),(list of supported <Timeout>s),(list of supported <autosuspend>s) OK	+UPSV: (0-1),(200-300000),(200-300000) OK

19.8.3 TOBY-L4 Defined values

Parameter	Type	Description
<mode>	Number	Power saving configuration. Allowed values: • 0: disabled • 1 (default and factory-programmed value): enabled
<Timeout>	Number	If <mode>=1 and active mode entered, it provides in milliseconds the guard period for the system to enter the S3 state after the USB interface entered the suspended or disconnected state, Ethernet entered the suspended state and air interface is idle. The parameter is always accepted but significant only when <mode>=1. The range goes from 200 ms to 300000 ms (5 minutes); the default and factory-programmed value is 5000 ms.
<autosuspend>	Number	Provides the guard period in milliseconds for the Ethernet to enter the suspended state after last RX/TX packet was sent. The parameter is not applicable if no external Ethernet PHY exists. The parameter is always accepted but significant only when <mode>=1. The range goes from 200 ms to 300000 ms (5 minutes); the default and factory-programmed value is 10000 ms.

19.8.4 TOBY-L2 / MPCI-L2 / LARA-R2 / TOBY-R2 / SARA-U2 / LISA-U2 / LISA-U1 / SARA-G4 / SARA-G3 / LEON-G1 Description

Sets the UART power saving configuration, but it has a global effect on the module power saving configuration:

- If the power saving is enabled (+UPSV: 1), the UART interface is cyclically enabled and the module enters idle mode automatically whenever possible
- If the power saving is disabled (+UPSV: 0), the UART interface is always enabled and the module does not enter idle mode
- If the power saving is controlled by the UART **RTS** line (+UPSV: 2), the UART interface is enabled and the module does not enter idle mode as long as the UART **RTS** line state is ON
- If the power saving is controlled by the UART **DTR** line (+UPSV: 3), the UART interface is enabled and the module does not enter idle mode as long as the UART **DTR** line state is ON

19.8.5 TOBY-L2 / MPCI-L2 / LARA-R2 / TOBY-R2 / SARA-U2 / LISA-U2 / LISA-U1 / SARA-G4 / SARA-G3 / LEON-G1 Syntax

Type	Syntax	Response	Example
Set	AT+UPSV=<mode>[,<Timeout>]	OK	AT+UPSV=1,3000 OK
Read	AT+UPSV?	+UPSV: <mode>[,<Timeout>] OK	+UPSV: 1,3000 OK

Type	Syntax	Response	Example
Test	AT+UPSV=?	+UPSV: (list of supported <mode>s), (list of supported <Timeout>s) OK	+UPSV: (0-3),(40-65000) OK

19.8.6 TOBY-L2 / MPCI-L2 / LARA-R2 / TOBY-R2 / SARA-U2 / LISA-U2 / LISA-U1 / SARA-G4 / SARA-G3 / LEON-G1 Defined values

Parameter	Type	Description
<mode>	Number	Power saving configuration. Allowed values: • 0 (default and factory-programmed value): disabled • 1: enabled o The UART is re-enabled from time to time to allow the DTE to transmit, and the module switches from idle to active mode in a cyclic way. If during the active mode any data is received, the UART (and the module) is forced to stay "awake" for a time specified by the <Timeout> parameter. Any subsequent data reception during the "awake" period resets and restarts the "awake" timer • 2: power saving is controlled by UART **RTS** line: o If the **RTS** line state is set to OFF, the power saving mode is allowed o If the **RTS** line state is set to ON, the module shall exit from power saving mode ☞ <mode>=2 is allowed only if the HW flow control has been previously disabled on the UART interface (e.g. with AT&K0), otherwise the command returns an error result code (+CME ERROR: operation not allowed if +CMEE is set to 2). ☞ With <mode>=2 the DTE can start sending data to the module without risk of data loss after having asserted the UART **RTS** line (**RTS** line set to ON state). • 3: power saving is controlled by UART **DTR** line: o If the **DTR** line state is set to OFF, the power saving mode is allowed o If the **DTR** line state is set to ON, the module shall exit from power saving mode ☞ <mode>=3 is allowed regardless the flow control setting on the UART interface. In particular, the HW flow control can be set on UART during this mode. ☞ With <mode>=3 the DTE can start sending data to the module without risk of data loss after having asserted the UART **DTR** line (**DTR** line set to ON state). • 4: reserved.
<Timeout>	Number	If <mode>=1 and active mode entered, it provides the guard period of no reception of characters on the UART interface before entering idle mode again. It is expressed in GSM frames (4.615 ms) • The range goes from 40 to 65000 (approximately from 184 ms to 300 s); the default value is 2000 GSM frames (ca 9.2 s) • This parameter is accepted only if <mode>=1

19.8.7 Notes

- For a detailed explanation of modules' operating modes, modules and interfaces behavior in reference to the +UPSV command setting, see the corresponding system integration manual.

TOBY-L2 / MPCI-L2 / LARA-R2 / TOBY-R2 / SARA-U2 / LISA-U2 / LISA-U1 / SARA-G4 / SARA-G3 / LEON-G1

- <mode>= 1, <mode>= 2 and <mode>= 3 are applicable only in reference to the UART interface, even if the command is accepted by all the serial interfaces (physical and MUX virtual interfaces). If the command is issued on USB/SPI/MUX channel, all the memory profiles are accordingly updated, but the setting is only applied to the UART interface.
- <mode>= 2 requires the disabling of the HW flow control only on the UART interface. The other serial interfaces can request the <mode>=2 for the UART regardless their flow control configuration.

TOBY-L2

- If an active, i.e. not suspended, USB connection exists, the module cannot enter power saving.
- In case of <mode>=1, there is no periodic **CTS** ON/OFF cycle but rather less regular **CTS** ON/OFF transitions.
- In case of <mode>=1, the UART interface is disabled after the <Timeout> parameter time, since the command result code is issued.

- In case of <mode>=2, the following handling is implemented:
  - When **RTS** line is set to ON state by the DTE, the behavior is the same of <mode>=0.
  - When **RTS** line is set to OFF state by the DTE the CTS line is hold in OFF state, hence DTE to DCE communication shall be suspended.
- In case of <mode>=3, the following handling is implemented:
  - When **DTR** line is set to ON state by the DTE, the behavior is the same of <mode>=0.
  - When **DTR** line is set to OFF state by the DTE the CTS line is hold in OFF state, hence DTE to DCE communication shall be suspended.
- The current command setting is automatically stored in NVM after the command issuing and it is not managed in the memory profile. As a result, if the flow control configuration is not saved in the memory profile, a wrong power saving behavior can happen at the next boot, in this scenario:
  - Power saving mode controlled by UART **RTS** line (<mode>=2) is applied.
  - DTE-DCE local flow control set to the default setting (HW flow control), because it was the stored configuration (in the memory profile that has been loaded).
  - **RTS** line set to OFF state by the DTE.

  In this configuration, the module is not allowed to send any data as long as the **RTS** line is set to OFF state, because the flow control "stop" condition forbids it. Therefore, in case <mode>=2 is selected, it is important to save the flow control configuration via the AT&W command before any module reset or power-off. The suggested procedure to be performed once is:
  - Set the "no flow control" configuration (via AT&K0, or AT+IFC=0,0 or AT\Q0 AT commands)
  - Set the +UPSV <mode>=2
  - Save the flow control configuration into the proper RAM profile mirror via the AT&W AT command
  - Update the stored profile in the NVM via +CPWROFF AT command

  At the next boot, the configuration will be consistent.
- For the same reason (+UPSV is not managed as part of the memory profile configuration), the commands AT&V, AT&W, ATZ and AT&F do not handle the +UPSV command's configuration

TOBY-L200-02S / TOBY-L200-03A / TOBY-L200-03S / TOBY-L210-02S / TOBY-L210-03A / TOBY-L210-03S / TOBY-L210-62S / TOBY-L220 / TOBY-L280

- In case of <mode>=1, the UART SW flow control (&K4 &K5 &K6, +IFC=1,1, \Q1) shall not be used.

TOBY-L201 / TOBY-L210-60S

- In case <mode>=2 is set, the following handling is implemented:
  - When **RTS** line is set to ON state by the DTE, the behavior is the same of <mode>=0.
  - When **RTS** line is set to OFF state by the DTE the behavior is the same of <mode>=1.
- In case <mode>=3 is set, the following handling is implemented:
  - When **DTR** line is set to ON state by the DTE, the behavior is the same of <mode>=0.
  - When **DTR** line is set to OFF state by the DTE the behavior is the same of <mode>=1.

TOBY-L200-00S / TOBY-L210-00S / MPCI-L2

- Since the UART interface is not supported, the command only configures the module power saving and the <Timeout> parameter has no effect.
- The command behaviour with <mode>=2 and <mode>=3 is the same of <mode>=1 (but the <Timeout> parameter is not accepted).

LARA-R2 / TOBY-R2 / SARA-U2 / LISA-U2 / LISA-U1

- Since these series are equipped with other serial interfaces besides the UART (e.g. USB, SPI), there are some interactions among the power saving mechanisms implemented by the different interfaces. See the corresponding module's system integration manual for a detailed description.
  For power consumption minimization, a DTE could require to set <mode>=1 or <mode>=2 or <mode>=3 (more likely 2 or 3), even if the UART is not used (or even connected). In this condition, the autobauding should be disabled on the UART interface. Otherwise, the +UPSV setting could be not allowed on the other available AT interfaces (e.g. USB) (an error result code is returned). If the UART interface is not accessible, the autobauding can be disabled on UART only by change the +IPR configuration from value 0 (autobauding) to a different value on the stored memory profile, that is according with the procedure described in Appendix B.3 applied on the other available AT interfaces (e.g. USB). If this procedure cannot be performed, the +UPSV <mode>=1 or <mode>=2 or <mode>=3 can be set on other available AT interfaces on the condition that the module UART has not pending data to send (that is URCs or the

greeting text, since the UART is not used by the DTE). Basically, this can be possible only if the +UPSV command is issued as the first command after the module boot.

- In case of <mode>=1, the UART interface is immediately disabled after the command result code is issued.

SARA-U201-04A / SARA-U201-04B / SARA-U201-04X / SARA-U270-04B

- There is an extended behaviour in case both UART and AUX UART are configured as AT interfaces (see +USIO).
  The command can be issued on either UART or AUX UART interface, and it has a global effect.
  - If power saving is disabled (+UPSV=0), both UART and AUX UART interfaces are always enabled and the module does not enter idle mode.
  - If power saving is enabled (+UPSV=1), both UART and AUX UART interfaces are cyclically enabled and the module enters idle mode automatically whenever possible. The enabling is synchronous, and the interfaces share the same <Timeout> parameter configuration. The description provided for UART interface is fully applicable to AUX UART interface.
  - If power saving is controlled by the UART **RTS** line (+UPSV=2), the UART and AUX UART interfaces are enabled and the module does not enter idle mode as long as the UART **RTS** line state is ON.
    The description provided for the UART interface is fully applicable to the AUX UART interface, just keeping in mind that the power saving of both interfaces is controlled by the UART **RTS** line (since AUX UART is not equipped with the **RTS** line).
  - If power saving is controlled by the UART **DTR** line (+UPSV=3), the UART and AUX UART interfaces are enabled and the module does not enter idle mode as long as the UART **DTR** line state is ON.
    The description provided for the UART interface is fully applicable to the AUX UART interface, just keeping in mind that the power saving of both interfaces is controlled by the UART **DTR** line (since AUX UART is not equipped with the **DTR** line).

LISA-U200-00S / LISA-U200-01S / LISA-U230 / LISA-U260-01S / LISA-U270-01S / LISA-U1

- <mode>=3 is not supported.

SARA-G4 / SARA-G3

- In case of <mode>=1, the UART interface is disabled after the <Timeout> parameter time, since the command result code is issued.
- <mode>=3 is not supported.

SARA-G300 / SARA-G310

- If a valid reference clock signal is not provided to the EXT32K input pin, the <mode>=1 and <mode>=2 does not change the power saving configuration of the UART and the module: the UART is always enabled and the module does not enter idle mode as for <mode>=0.

SARA-G340-00S / SARA-G340-01S / SARA-G350-00S / SARA-G350-00X / SARA-G350-01B / SARA-G350-01S

- If <mode>=2 the **CTS** line follows the module power saving state if **RTS** is set to OFF.

LEON-G1

- In case of <mode>=1, the UART interface is disabled after the <Timeout> parameter time, since the command result code is issued.
- If <mode>=2 the **CTS** line follows the module power saving state if **RTS** is set to OFF.
- <mode>=3 is not supported.

19.9 End user test +UTEST

+UTEST						
Modules	TOBY-L4 TOBY-L2 MPCI-L2					
	LARA-R2 TOBY-R2					
	SARA-U2 LISA-U2 LISA-U1					
	SARA-G3 LEON-G1					
Attributes	**Syntax**	**PIN required**	**Settings saved**	**Can be aborted**	**Response time**	**Error reference**
	full	No	No	No	-	+CME Error

19.9.1 Description

Enables the module testing on the RF parts and all the digital pins.

⚠ The usage of this command shall be restricted to controlled (shielded chamber/box) environments and for test purposes only.

⚠ u-blox assumes no responsibilities for the inappropriate use of this command.

19.9.2 TOBY-L4 / TOBY-L2 / MPCI-L2 / LARA-R2 / TOBY-R2 / SARA-U2 / LISA-U2 / LISA-U1 / SARA-G4 / SARA-G3 / LEON-G1 RF test description

Sets the module in non-signalling (or test) mode, or returns to the signalling (or normal) mode.

In test/non-signalling mode, the module switches off the protocol stack for performing single tests which could not be performed during signalling mode.

⚠ Improper usage of this command on a real network could disturb other users and the network itself.

When entering the test mode, it is possible to sequentially trigger the following actions for testing purposes (also depending on the RATs supported by the module):

- 2G transmission of a GSM burst sequence on the desired channel and power level (only one time slot configuration is available)
- 2G transmission of an 8-PSK modulation burst sequence on the desired channel and power level (only one time slot configuration is available)
- 3G transmission of a WCDMA signal on the desired channel and power level
- 4G transmission of an LTE SC-FDMA OFDM signal (5 MHz bandwidth) in the desired channel in the FDD band and power level
- 4G transmission of LTE SC-FDMA OFDM signal (5 MHz bandwidth) in the desired channel in TDD band and power level
- Receiving signal detection and RF level measurement on the desired 2G, 3G or 4G (LTE) channel
- Receiving signal detection at diversity or secondary antenna input and RF level measurement on the desired 2G, 3G or 4G (LTE) channel

☞ TOBY-L2 / MPCI-L2
The receiving signal detection at the secondary antenna is limited to only the 3G and 4G channels.

☞ The command only accepts the parameter set supported by the specific module version. When an unsupported parameter is issued, an error result code will be provided ("+CME ERROR: operation not supported" or "+CME ERROR: 4" depending on the +CMEE AT command setting).

The execution of these actions is performed in non-signalling mode. In non-signalling mode:

- The module only accepts +UTEST commands

In normal mode:

- The only allowed +UTEST command is the AT+UTEST=1 used to enable the testing interface
- All other +UTEST commands return an error result code ("+CME ERROR: operation not allowed" or "+CME ERROR: 3" depending on the +CMEE AT command setting)

☞ The module must not be registered with the network before entering the non-signalling mode, otherwise an error result code ("+CME ERROR: operation not allowed" or "+CME ERROR: 3" depending on the +CMEE AT command setting) is provided.

☞ The +CMEE command can only be set in normal mode.

To return to the normal mode, perform one of these actions:

- A module reset
- Power off the module
- Send AT+UTEST=0 (depending on the module series, a reboot could be automatically performed; for more details, see the End User Test Application Note [133])

When the module returns the normal mode, the network registration status stored in the profile will be restored.

☞ TOBY-L2 / MPCI-L2
A network deregistration is not needed, as the AT+UTEST=1 command deactivates the protocol stack before entering the non-signalling mode.
When the module exits from the test mode, the network status before entering this mode will be restored.

☞ See the End User Test Application Note [133] for further test command examples.

19.9.3 Syntax

Type	Syntax	Response	Example
Set	AT+UTEST=<mode>,[<par1>],[<par2>],[<par3>],[<par4>],[<par5>]	If <mode>=0 or 1 OK	AT+UTEST=0 OK
		If <mode>=2 or 3 +UTEST: [<par1>,<par2>][,<par3>,<par4>,<par5>][,<min>,<avg>,<max>] OK	AT+UTEST=2,124,250 +UTEST: 124,250,-80,-80,-80 OK
Read	AT+UTEST?	+UTEST: <mode> OK	+UTEST: 1 OK
Test	AT+UTEST=?	+UTEST: (list of supported <mode>s) OK	+UTEST: (0-3) OK

19.9.4 Defined values

Parameter	Type	Description
<mode>	Number	Test mode setting: • 0: the module returns to the module normal mode • 1: the module enters non-signalling mode • 2: RX test mode (measuring the antenna level estimation of the received RF signal) • 3: TX test mode (GSMK/8-PSK burst or transmission in 3G bands)
<par1>..<par5>	Number	Parameters needed for RX and TX test mode as reported in the table below.

19.9.5 TOBY-L4 / TOBY-L2 / MPCI-L2 / LARA-R2 / TOBY-R2 / SARA-U2 / LISA-U2 / LISA-U1 / SARA-G4 / SARA-G3 / LEON-G1 Notes

- Check the corresponding module data sheet for the list of supported bands and Radio Access Technologies (RAT).
- **RX mode setting (<mode>=2)**

Parameter	Description	Range	Default	Notes
<par1>	Channel	0 ÷ 165535	32	RX channel 2G RAT: for 850, 900, 1800 bands the value corresponds to ARFCN while for 1900 band an offset of 32768 is added. o [0-124]: GSM 900 MHz o [128-251]: GSM 850 MHz o [512-885]: DCS 1800 MHz o [975-1023]: EGSM 900 MHz o [33280-33578]: PCS 1900 MHz (corresponding to ARFCN 512-810 range in band 1900)

Parameter	Description	Range	Default	Notes
				RX channel 3G RAT: the value corresponds to UARFCN except for band 19 where an offset of 20000 is added, additional channels available in some 3G bands are not supported. o [1537-1738]: band 4 (1700 MHz) o [2937-3088]: band 8 (900 MHz) o [4357-4458]: band 5 (850 MHz) o [4387-4413]: band 6 (800 MHz) o [20712-20763]: band 19 (800 MHz) o [9662-9938]: band 2 (1900 MHz) o [10562-10838]: band 1 (2100 MHz) o [10050-10125]: TD-SCDMA band 34 (2000 MHz) o [9400-9600]: TD-SCDMA band 39 (1900 MHz) RX channel 4G RAT: the value corresponds to EARFCN with an offset of 100000.

<par1> range	LTE band	EARFCN range
[100000-100599]	FDD 1	[0-599]
[100600-101199]	FDD 2	[600-1199]
[101200-101949]	FDD 3	[1200-1949]
[101950-102399]	FDD 4	[1950-2399]
[102400-102649]	FDD 5	[2400-2649]
[102650-102749]	FDD 6	[2650-2749]
[102750-103449]	FDD 7	[2750-3449]
[103450-103799]	FDD 8	[3450-3799]
[103800-104149]	FDD 9	[3800-4149]
[105010-105179]	FDD 12	[5010-5179]
[105180-105279]	FDD 13	[5180-5279]
[105730-105849]	FDD 17	[5730-5849]
[105850-105999]	FDD 18	[5850-5999]
[106000-106149]	FDD 19	[6000-6149]
[106150-106449]	FDD 20	[6150-6449]
[108040-108689]	FDD 25	[8040-8689]
[108690-109039]	FDD 26	[8690-9039]
[109210-109659]	FDD 28	[9210-9659]
[109660-109769]	FDD 29	[9660-9769]
[136200-136349]	TDD 34	[36200-36349]
[137750-138249]	TDD 38	[37750-38249]
[138250-138649]	TDD 39	[38250-38649]
[138650-139649]	TDD 40	[38650-39649]
[139650-141589]	TDD 41	[39650-41589]

Table 30: <par1> parameter range

☞ The "+CME ERROR: operation not supported" or "+CME ERROR: 4" error result code will be provided in these cases (depending on the +CMEE AT command setting):
- o A value not belonging to the above ranges is set
- o The RX channel parameter value belongs to a not supported RAT (2G or 3G or 4G RAT) or band

<par2>	Time	1 ÷ 600000	1000	Time interval for RX test expressed in ms ☞ TOBY-L2 / MPCI-L2 The range goes from 50 ms to 600000 ms.
<par3>	Antenna diversity	0 ÷ 1	0	Receiver path: o 0: main / primary antenna

Parameter	Description	Range	Default	Notes
				o 1: diversity / secondary antenna The parameter is available only if supported, otherwise an error result code will be provided ("+CME ERROR: operation not supported" or "+CME ERROR: 4" depending on the +CMEE AT command setting)
<min>	Minimum antenna RF level estimation	-100 ÷ -20		Expressed in dBm, for 2G RAT ☞ LARA-R2 / LISA-U1 / LISA-U2 / SARA-U2 / TOBY-L4 / TOBY-R2 In 3G / 4G RAT the range goes from -90 to -20. ☞ TOBY-L2 MPCI-L2 The range is [-100 ÷ -30] in 2G and [-90 ÷ -30] in 3G and 4G.
<avg>	Average antenna RF level estimation	-100 ÷ -20		Expressed in dBm, for 2G RAT ☞ LARA-R2 / LISA-U1 / LISA-U2 / SARA-U2 / TOBY-L4 / TOBY-R2 In 3G / 4G RAT the range goes from -90 to -20. ☞ TOBY-L2 MPCI-L2 The range is [-100 ÷ -30] in 2G and [-90 ÷ -30] in 3G and 4G.
<max>	Maximum antenna RF level estimation	-100 ÷ -20		Expressed in dBm, for 2G RAT ☞ LARA-R2 / LISA-U1 / LISA-U2 / SARA-U2 / TOBY-L4 / TOBY-R2 In 3G / 4G RAT the range goes from -90 to -20. ☞ TOBY-L2 MPCI-L2 The range is [-100 ÷ -30] in 2G and [-90 ÷ -30] in 3G and 4G.

- **TX mode setting (<mode>=3)**

Parameter	Description	Range	Default	Notes
<par1>	Tx channel	0 ÷ 165535	32	TX channel 2G RAT: for 850, 900, 1800 bands the value corresponds to ARFCN while for 1900 band an offset of 32768 is added. o [0-124]: GSM 900 MHz o [128-251]: GSM 850 MHz o [512-885]: DCS 1800 MHz o [975-1023]: EGSM 900 MHz o [33280-33578]: PCS 1900 MHz (corresponding to ARFCN 512-810 range in band 1900) TX channel 3G RAT: the value corresponds to UARFCN except for the band 19 where an offset of 20000 is added, additional channels available in some 3G bands are not supported. o [1312-1513]: band 4 (1700 MHz) o [2712-2863]: band 8 (900 MHz) o [4132-4233]: band 5 (850 MHz) o [4162-4188]: band 6 (800 MHz) o [20312-20363]: band 19 (800 MHz) o [9262-9538]: band 2 (1900 MHz) o [9612-9888]: band 1 (2100 MHz) o [10050-10125]: TD-SCDMA band 34 (2000 MHz) o [9400-9600]: TD-SCDMA band 39 (1900 MHz) TX channel 4G RAT: the value corresponds to EARFCN with an offset of 100000.

<par1> range	LTE band	EARFCN range
[118000-118599]	FDD 1	[18000-18599]
[118600-119199]	FDD 2	[18600-19199]
[119200-119949]	FDD 3	[19200-19949]

Parameter	Description	Range	Default	Notes

<par1> range	LTE band	EARFCN range
[119950-120399]	FDD 4	[19950-20399]
[120400-120649]	FDD 5	[20400-20649]
[120650-120749]	FDD 6	[20650-20749]
[120750-121449]	FDD 7	[20750-21449]
[121450-121799]	FDD 8	[21450-21799]
[121800-122149]	FDD 9	[21800-22149]
[123010-123179]	FDD 12	[23010-23179]
[123180-123279]	FDD 13	[23180-23279]
[123730-123849]	FDD 17	[23730-23849]
[123850-123999]	FDD 18	[23850-23999]
[124000-124149]	FDD 19	[24000-4149]
[124150-124449]	FDD 20	[24150-24449]
[126040-126689]	FDD 25	[26040-26689]
[126690-127039]	FDD 26	[26690-27039]
[127210-127659]	FDD 28	[27210-27659]
[136200-136349]	TDD 34	[36200-36349]
[137750-138249]	TDD 38	[37750-38249]
[138250-138649]	TDD 39	[38250-38649]
[138650-139649]	TDD 40	[38650-39649]
[139650-141589]	TDD 41	[39650-41589]

Table 31: <par1> parameter range

☞ The "+CME ERROR: operation not supported" or "+CME ERROR: 4" error result code will be provided in these cases (depending on the +CMEE AT command setting):

- A value not belonging to the above ranges is set
- The TX channel parameter value belongs to a not supported RAT (2G or 3G or 4G RAT) or band

☞ Avoid channels that would put the TX waveform outside the band due to SC-FDMA modulation bandwidth.

<par2>	Power control level	-56 ÷ 24	5	For 2G RAT: PCL (power control level). The allowed values depend on the related <par1> value: lower numbers means higher power level. o [0-19]: GSM 850 and 900, if <par2> is less than 5 the handling is the same for <par2>=5 o [0-15]: DCS 1800 and PCS 1900 In case <par4> is set to 2 (8-PSK modulation) the range is as below. Other values are valid but behave as the indicated level: o [0-19]: GSM 850 and 900 if <par2> is less than 8 the handling is the same for <par2>=8 o [0-15]: DCS 1800 and PCS 1900; if <par2> is less than 2 the handling is the same for <par2>=2 For 3G RAT: absolute output power [dBm] o [-56 ÷ 24] for all the bands For 4G RAT: absolute output power [dBm] o [-40 ÷ 24] for all the bands ☞ Only the values indicated in the above ranges are valid, otherwise an error result code will be provided ("+CME ERROR: operation not supported" or "+CME ERROR: 4" depending on the +CMEE AT command setting).

Parameter	Description	Range	Default	Notes
				TOBY-L2 / MPCI-L2 The minimum value of the output power level <par2> is -50 dBm in 3G mode.
<par3>	Training sequence	0 ÷ 7	5	Training sequence to be used (to be changed only in case of link with network simulator, else use default) In 3G / 4G RAT the values is unused.
<par4>	Modulation mode	1 ÷ 2	1	Modulation mode: o 1: GMSK normal modulation including the training sequence o 2: 8-PSK normal modulation including the training sequence In 3G / 4G RAT the parameter is ignored. LTE SC-FDMA OFDM modulation (5 MHz bandwidth), FDD, is automatically set using for <par1> an EARFCN value. The LTE Cat.M1 SC-FDMA OFDM modulation (1.4 MHz bandwidth), FDD, is automatically set using an EARFCN value for the <par1> parameter.
<par5>	Time	0 ÷ 600000	1000	Time interval for TX test expressed in ms o 0: burst sequence is continuously transmitted. In this case the command will immediately return the information text response. The command line will be immediately available for any +UTEST command. Provide AT+UTEST=1 command to stop the burst sequence transmission, any other +UTEST commands can be set and the current sequence transmission is stopped. TOBY-L2 / MPCI-L2 The range goes from 50 ms to 600000 ms.

TOBY-L2 / MPCI-L2

- During the continuous TX mode tests, it is not possible to change the technology: in this case the testing must be stopped by the command AT+UTEST=1 or by forcing the module to transmit for a limited time interval, and the RAT correctly configured. After that, the continuous TX mode tests can be restarted.

19.9.6 TOBY-L4 / TOBY-L2 / MPCI-L2 / LARA-R2 / TOBY-R2 / SARA-U2 / LISA-U2 / LISA-U1 / SARA-G4 / SARA-G3 / LEON-G1 Examples

In RX mode test command examples the module provides the information text response after the timeout issued in the set command.

Command	Response	Description
AT+UTEST=2	+UTEST: 32,1000,-89,-88,-87 OK	The module measures the antenna RX level at RX channel 32 band GSM 900 for 1 s interval. In the example -89,-88,-87 are the antenna RF level estimation: the numbers are just an example.
AT+UTEST=2,885,5000	+UTEST: 885,5000,-66,-65,-65 OK	The module measures the antenna RX level at RX channel 885 band DCS 1800 for 5 s interval.
AT+UTEST=2,10562,2000	+UTEST: 10562,2000,-60,-60,-59 OK	The module measures the antenna RX level at RX channel 10562 band B1 for 2 s interval on the main antenna path.
AT+UTEST=2,10562	+UTEST: 10562,1000,0,-85,-85,-85 OK	The module measures the antenna RX level at RX channel 10562 band B1 for 1 s interval on the main antenna path.

Command	Response	Description
AT+UTEST=2,65,3000,0	+UTEST: 65,3000,0,-63,-62,-62 OK	The module measures the antenna RX level at RX channel 65 band GSM 900 for 3 s interval on the main antenna path.
AT+UTEST=2,4357,,1	+UTEST: 4357,1000,1,-51,-51,-51 OK	The module measures the antenna RX level at RX channel 4357 band B5 for 1 s interval on the diversity antenna path.
AT+UTEST=2,102174,500,0	+UTEST: 102174,500,0,-71,-70,-70 OK	The module measures the antenna RX level at RX channel 2174 band FDD 4 for 0.5 s interval on the primary antenna path.
AT+UTEST=2,105230,,1	+UTEST: 105230,1000,1,-72,-71,-70 OK	The module measures the antenna RX level at RX channel 5230 band FDD 13 for 1 s interval on the secondary antenna path.
AT+UTEST=2,109690,,0	+UTEST: 109690,1000,0,-52,-51,-50 OK	The module measures the antenna RX level at RX channel 9690 band FDD 29 for 1 s interval on the primary antenna path.
AT+UTEST=2,109690,,1	+UTEST: 109690,1000,1,-52,-51,-50 OK	The module measures the antenna RX level at RX channel 9690 band FDD 29 for 1 s interval on the secondary antenna path.

Table 32: RX mode test command examples

Command	Response	Description
AT+UTEST=3,32,7,5	+UTEST: 32,7,5,1,1000 OK	The module will transmit for 1 s interval 1 slot burst sequence at TX channel 32 GSM 900 at PCL 5 using training sequence 5 and normal GMSK modulation.
AT+UTEST=3,65,8,,2,5000	+UTEST: 65,8,5,2,5000 OK	The module will transmit for 5 s interval 1 slot burst sequence at TX channel 65 GSM 900 at PCL 8 (gamma 6, 27 dBm) using training sequence 5 and normal 8-PSK modulation.
AT+UTEST=3,660,,,,0	+UTEST: 660,5,5,1,0 OK	The module will transmit continuously 1 slot burst sequence at TX channel 660 DCS 1800 at PCL 5 using training sequence 5 and normal GMSK modulation.
AT+UTEST=3,9612,22,,,2000	+UTEST: 9612,22,5,1,2000 OK	The module will transmit for 2 s interval at TX channel 9612 band B1 at 22 dBm power level using WCDMA modulation.
AT+UTEST=3,120399,15,,,3000	+UTEST: 120399,15,5,1,3000 OK	The module transmits for 3 s interval at TX channel 20399 band FDD 4 at 15 dBm power level using SC-FDMA OFDM modulation 5 MHz bandwidth.
AT+UTEST=3,123230,-10,,,0	+UTEST: 123230,-10,5,1,0 OK	The module continuously transmits at TX channel 23230 band FDD 13 at -10 dBm power level using SC-FDMA OFDM modulation 5 MHz bandwidth.

Table 33: TX mode test command examples

19.9.7 Digital pins testing description

☞ TOBY-L200-00S / TOBY-L201 / TOBY-L210-00S / TOBY-L210-60S / MPCI-L200-00S / MPCI-L201 / MPCI-L210-00S / MPCI-L210-60S / SARA-U260-00S / SARA-U270-00S / SARA-U270-00X / SARA-U280-00S / LISA-U200-00S / LISA-U200-01S / LISA-U200-02S / LISA-U200-52S / LISA-U200-62S / LISA-U230 / LISA-U260 / LISA-U270 / SARA-G300 / SARA-G310 / SARA-G340-00S / SARA-G340-01S / SARA-G350-00S / SARA-G350-00X / SARA-G350-01B / SARA-G350-01S / LEON-G1
The feature is not supported.

Defines the commands to perform some verifications on all the digital pins of the u-blox cellular modules.

These pins can be considered as generic digital input / output pins; it is possible to configure one pin as a digital output with "high" logic level and then verify the voltage level present. Conversely, it is possible set a pin as

a digital input, externally apply a "high" or "low" logic level and then check if the module is able to correctly measure the voltage level applied.

After the execution of the AT+UTEST=10,5 command, it is possible to externally apply a voltage level to the enabled input pins and / or measure the voltage level on the pins configured as digital input.

These commands are intended for production to check the correct digital pins behavior, detect possible soldering or functional problems and can be executed only in non-signalling mode (otherwise the "+CME ERROR: operation not allowed" or "+CME ERROR: 3" error result code - depending on the +CMEE AT command setting - is issued without performing any operations).

Do not exceed the values reported in the Generic Digital Interface section of the module data sheet when testing a pin as a digital input pin, since stressing the device above the listed ratings may cause a permanent damage of the module.

TOBY-L4 / TOBY-L2 / MPCI-L2 / LARA-R2 / TOBY-R2 / SARA-U2 / LISA-U2 / LISA-U1 / SARA-G3 / LEON-G1 See the End User Test Application Note [133] and the corresponding module data sheet for the list of pins available for testing and their levels characteristics and further test command examples.

19.9.8 Syntax

Type	Syntax	Response	Example
Digital pins testing generic syntax			
Set	AT+UTEST=10,<op_code>[,[<bit_padding>]<pin_seq>]	OK	AT+UTEST=10,3,"0000001000000300" OK
Original configuration restoring			
Set	AT+UTEST=10,0	OK	AT+UTEST=10,0 OK
Pins set definition			
Set	AT+UTEST=10,2,[<bit_padding>]<pin_seq>	OK	AT+UTEST=10,2,"0000000C300000003000" OK
Pins configuration			
Set	AT+UTEST=10,3,[<bit_padding>]<pin_seq>	OK	AT+UTEST=10,3,"0000000420000001000" OK
Output pins definition			
Set	AT+UTEST=10,4,[<bit_padding>]<pin_seq>	OK	AT+UTEST=10,4,"00000000100000002000" OK
Digital testing execution			
Set	AT+UTEST=10,5	OK	AT+UTEST=10,5 OK
Digital value measurement			
Set	AT+UTEST=10,6	<bit_padding>]<pin_seq> OK	AT+UTEST=10,6 00000004100000003000 OK
Read	AT+UTEST?	+UTEST: <mode> OK	+UTEST: 1 OK
Test	AT+UTEST=?	+UTEST: (list of supported <mode>s) OK	+UTEST: (0-3) OK

19.9.9 Defined values

Parameter	Type	Description
<op_code>	Number	Test mode setting: • 0: exits the test interface and restore the pins to the original configuration

Parameter	Type	Description
		• 2: defines a set of pins that will be tested and initialize these pins to be ready for testing. The original pins configuration is kept for final restore. In the [<bit_padding>]<pin_seq> parameter use this notation to represent each module pin with its binary digit: o 0: the pin will not be tested o 1: the pin will be tested (as digital input or output) • 3: configures the logical pins previously enabled for testing as output or input; the command has effect only if AT+UTEST=10,2 has been previously issued. In case a not enabled pin is set as digital input or output, the command does not return an error and the setting is not applied. In the [<bit_padding>]<pin_seq> parameter use this notation to represent each module pin with its binary digit: o 0: the pin will be set as an output o 1: the pin will be set as an input • 4: configures the value of the output pins under testing; the command has effect only if AT+UTEST=10,3 has been previously issued; The command is not mandatory if there are not output pins to configure. In the [<bit_padding>]<pin_seq> parameter use this notation to represent each module pin with its binary digit: o 0: the pin will output a "low" logic level o 1: the pin will output a "high" logic level • 5: apply the setting change defined with <op_code>= 2 / 3 / 4 and triggers the execution of the digital testing. Digital testing of the pins is possible only after the execution of the AT+UTEST=10,5 command. • 6: returns the logic value of pins under testing (both input and output); in the [<bit_padding>]<pin_seq> parameter use this notation to represent each module pin with its binary digit: o 0: "low" logic digital level measured at the module pin o 1: "high" logic digital level measured at the module pin
[<bit_padding>]<pin_seq>	Number	Sequence of hexadecimal digits containing the pin information and the action to execute: • TOBY-L4/TOBY-L2/MPCI-L2/LARA-R2/TOBY-R2/SARA-U2/LISA-U2/LISA-U1/SARA-G3 / LEON-G1 - See the Notes and End User Test Application Note [133] for detailed number description

19.9.10 Notes

- Consider these steps to construct the [<bit_padding>]<pin_seq> sequence:
  - o Consider the total number of the module's pins available
    - TOBY-L4 / TOBY-L2 / MPCI-L2 / TOBY-R2 - 92 pins
    - LARA-R2 - 68 pins
    - SARA-U2 / SARA-G3 - 64 pins
    - LISA-U2 - 76 pins
  - o When a non-testable pin is selected, the command does not return an error result code but the value is not considered and not applied.
  - o The status of the n-th pin will be represented by the corresponding n-th bit; see the <op_code> description for the notation of each mode setting
  - o Convert each group of four binary digits into its hexadecimal representation
  - o TOBY-L2/LISA-U2 - Add one 0 digit at the beginning of the sequence to complete the resulting sequence of hexadecimal values with 0 padding

☞ TOBY-L4 / TOBY-L2 / MPCI-L2 / LARA-R2 / TOBY-R2 / SARA-U2 / LISA-U2 / LISA-U1 / SARA-G3 / LEON-G1
See the End User Test Application Note [133] for the list of pins available for testing.

- An example of the AT commands sequence to test the digital pins is reported in Table 34.

Command	Response	Description
		Configure the formatting of the error result code by means of +CMEE AT command
AT+COPS=2	OK	Deregister the module from the network
AT+UTEST=1	OK	The module enters the test mode

Command	Response	Description
AT+UTEST=10,2,"000007F400C000D83F00"	OK	The command puts the module in Interface initialised state; the command saves the pins status to restore it at the end of the test. Pins enabled for testing: DSR, RI, DCD, DTR, RTS, CTS, GPIO1, GPIO2, GPIO3, GPIO4, I2S1_RXD/GPIO6, I2S1_TXD/GPIO7, GPIO5, I2S1_CLK/GPIO8, I2S1_WA/GPIO9, SPI_SCLK/GPIO10, SPI_MOSI/GPIO11, SPI_MISO/GPIO12, SPI_SRDY/GPIO13, SPI_MRDY/GPIO14
AT+UTEST=10,3,"00000494004000C01800"	OK	Pins configuration: o DTR, RTS, GPIO3, GPIO4, I2S1_RXD/GPIO6, GPIO5, I2S1_CLK/GPIO8, SPI_MOSI/GPIO11, SPI_MRDY/GPIO14 as input o DSR, RI, DCD, CTS, GPIO1, GPIO2, I2S1_TXD/GPIO7, I2S1_WA/GPIO9, SPI_SCLK/GPIO10, SPI_MISO/GPIO12, SPI_SRDY/GPIO13 as output
AT+UTEST=10,4,"00000360008000182700"	OK	Digital logic value of the output pins: o DSR, RI, DCD, CTS, GPIO1, GPIO2, I2S1_TXD/GPIO7, I2S1_WA/GPIO9, SPI_SCLK/GPIO10, SPI_MISO/GPIO12, SPI_SRDY/GPIO13 set to "high".
AT+UTEST=10,5	OK	Configurations made by AT+UTEST=10,2; AT+UTEST=10,3 and AT+UTEST=10,4 are executed.
AT+UTEST=10,6	000007F400C000D83F00 OK	Logic digital value measured at modules pins: o DSR, RI, DCD, DTR, RTS, CTS, GPIO1, GPIO2, GPIO3, GPIO4, I2S1_RXD/GPIO6, I2S1_TXD/GPIO7, GPIO5, I2S1_CLK/GPIO8, I2S1_WA/GPIO9, SPI_SCLK/GPIO10, SPI_MOSI/GPIO11, SPI_MISO/GPIO12, SPI_SRDY/GPIO13, SPI_MRDY/GPIO14: "high" level detected
AT+UTEST=0	OK	Module exits from the test mode and normal pins configurations is restored.

Table 34: Digital pins test command examples

The digital pins can be configured as many times as needed by the testing process; AT+UTEST=10,2 command is not needed any more as the DUT is already in Interface initialised state.

19.10 Smart temperature supervisor +USTS

+USTS						
Modules	TOBY-L4006 TOBY-L4106 TOBY-L4206 TOBY-L4906-01A TOBY-L4906-51A TOBY-L200-02S TOBY-L200-03A TOBY-L200-03S TOBY-L201-02S TOBY-L210-02S TOBY-L210-03A TOBY-L210-03S TOBY-L210-62S TOBY-L220 TOBY-L280 MPCI-L200-02S MPCI-L200-03S MPCI-L201-02S MPCI-L210-02S MPCI-L210-03S MPCI-L220 MPCI-L280					
	LARA-R2 TOBY-R2					
	SARA-U2 LISA-U2 LISA-U1					
	SARA-G340 SARA-G350 SARA-G350-53S LEON-G1					
Attributes	**Syntax**	**PIN required**	**Settings saved**	**Can be aborted**	**Response time**	**Error reference**
	partial	No	Profile	No	-	+CME Error

19.10.1 Description

Enables/disables the Smart Temperature Supervisor feature.

When the feature is enabled the internal temperature is measured via the internal temperature sensor:

- If the measured value goes over the t_{+1} threshold or below the t_{-1} threshold an URC will be issued to notify a warning: the module is still in a valid and good working condition.
- If the measured value goes over the t_{+2} threshold or below the t_{-2} threshold an URC will be issued to notify the dangerous working condition. After the notification the device will start the shutting down procedure to avoid damaging itself.

The +UUSTS URC will be also issued after having enabled the feature indication (by means of <mode>= 1 or <mode>= 2) and at the module power-on (if the feature indication is enabled).

☞ The shut-down procedure is performed only if <mode>=1 (notified by a URC) or <mode>=3 (without notification).

☞ For security reasons the shutdown is suspended in case of emergency call in progress. In this case the device will switch off at the call termination: an URC will be sent to notify this.

☞ SARA-U2 / LISA-U200-03S / LISA-U200-83S / LISA-U201
The shut-down procedure will start 3 s after the "dangerous working condition" URC has been issued. If emergency calls have not yet been disconnected by the user by means of the ATH command, after this 3 s timer they will be released by the module itself before starting the shutdown procedure.

☞ If the feature is disabled (<mode>= 0 and <mode>= 2) there is no embedded protection against not allowed temperature working conditions.

☞ For more details on Smart Temperature Supervisor feature and the thresholds definition, see the corresponding module system integration manual.

19.10.2 Syntax

Type	Syntax	Response	Example
Set	AT+USTS=<mode>	OK	AT+USTS=0 OK
Read	AT+USTS?	+USTS: <mode> OK	+USTS: 0 OK
Test	AT+USTS=?	+USTS: (list of supported <mode>s) OK	+USTS: (0-2) OK
URC		+UUSTS: <mode>,<event>	+UUSTS: 1,1

19.10.3 Defined values

Parameter	Type	Description
<mode>	Number	Enables / disables the smart temperature mode: • 0 (default value and factory-programmed value): smart temperature feature disabled • 1: smart temperature feature enabled; the indication by means of the +UUSTS URC and shutting down (if needed) are performed • 2: smart temperature indication enabled; the +UUSTS URC will be issued to notify the Smart Temperature Supervisor status • 3: smart temperature feature enabled with no indication; the shutdown (if needed) is performed, but without a URC notification
<event>	Number	Provides the event status: • -2: temperature below t_{-2} threshold • -1: temperature below t_{-1} threshold • 0: temperature inside the allowed range - not close to the limits • 1: temperature above t_{+1} threshold • 2: temperature above the t_{+2} threshold • 10: timer expired and no emergency call is in progress, shutdown phase started • 20: emergency call ended, shutdown phase started • 100: error during measurement

19.10.4 Notes

TOBY-L4

- No time delay between t_{+2} warning and shutdown phase.
- Reboot the module to apply the new <mode> parameter configuration.
- <mode>=0, 2 are not supported. The factory-programmed value is <mode>=3.
- <event>=100 is not supported.

TOBY-L2 / MPCI-L2 / LARA-R2 / TOBY-R2 / SARA-U2 / LISA-U2 / LISA-U1 / SARA-G3

- <mode>=3 is not supported.

LEON-G1

- <mode>=3 is not supported.
- <event>=100 is not supported.

19.11 MSPR profile handling configuration +UDCONF=40

+UDCONF=40						
Modules	TOBY-L4 TOBY-L200-02S TOBY-L200-03A TOBY-L200-03S TOBY-L210-02S TOBY-L210-03A TOBY-L210-03S TOBY-L210-62S TOBY-L280 MPCI-L200-02S MPCI-L200-03S MPCI-L210-02S MPCI-L210-03S MPCI-L280					
	LARA-R211 TOBY-R200					
	SARA-U201 SARA-U260 SARA-U270 LISA-U200-01S LISA-U200-02S LISA-U200-03S LISA-U200-52S LISA-U200-62S LISA-U200-83S LISA-U201 LISA-U230 LISA-U260 LISA-U270					
Attributes	**Syntax**	**PIN required**	**Settings saved**	**Can be aborted**	**Response time**	**Error reference**
	partial	No	NVM	No	-	+CME Error

19.11.1 Description

The multi-slot transmission power can be reduced according to the 3GPP specifications and set to a defined threshold.

☞ u-blox cellular modules are certified according to all the capabilities and options stated in the Protocol Implementation Conformance Statement document (PICS) of the module. The PICS, according to 3GPP TS 51.010-2 [84], 3GPP TS 34.121-2 [85], 3GPP TS 36.521-2 [115] and 3GPP TS 36.523-2 [116], is a statement of the implemented and supported capabilities and options of a device. If the user changes the command settings during the certification process, the PICS of the application device integrating a u-blox cellular module must be changed accordingly.

In 3G mode (i.e. UMTS radio access), the maximum output power cannot be set through the AT command, but is automatically set by the module according to the UE Maximum Power Reduction for the nominal maximum output power with HS-DPCCH and E-DCH defined by 3GPP specifications.

In 2G mode (i.e. GPRS and EDGE radio access), the maximum output power in GMSK or 8-PSK multi-slot configuration can be set by selecting the active multi-slot power reduction profile within the available profiles defined in Table 35 according to 3GPP specifications.

The maximum output power in GMSK or 8-PSK multislot configuration depends on the active MSPR profile set by the AT command and the number of active Tx slots set by the network, as described in Table 35:

Active Tx slots	MSPR profile 0	MSPR profile 1	MSPR profile 2	MSPR profile 3
1	0	0	0	0
2	3	1	0	0
3	4,8	2,8	0,8	0
4	6	4	2	0

Table 35: Power reduction (dBm)

☞ TOBY-L4 / LARA-R2 / TOBY-R2 / SARA-U2 / LISA-U2
The changes in the user defined power reduction are effective after reboot.

19.11.2 Syntax

Type	Syntax	Response	Example
Set	AT+UDCONF=40,<GMSK_profile>[,<8PSK_profile>]	OK	AT+UDCONF=40,2,3 OK
Read	AT+UDCONF=40	+UDCONF: 40,<GMSK_profile>,<8PSK_profile> OK	AT+UDCONF=40 +UDCONF: 40,2,2 OK

19.11.3 Defined values

Parameter	Type	Description
<GMSK_profile>	Number	User defined power reduction: MSPR GMSK profile (range 0-3). The factory-programmed value is 2.
<8PSK_profile>	Number	User defined power reduction: MSPR 8-PSK profile (range 0-3). This parameter is optional: if omitted, the MSPR 8-PSK profile is not affected. The factory-programmed value is 2. The parameter is significant only for cellular modules supporting 8-PSK in uplink.

19.11.4 Notes

- For AT&T certification: the 8-PSK MSPR profile should be limited to values 2 and 3.

TOBY-L2 / MPCI-L2

- The command setting is volatile and not stored in NVM.
- The module reverts back to the default MSPR profile after a network detach operation (e.g. using AT+COPS=2).

19.12 Data channel configuration +UDATACHANNEL

+UDATACHANNEL						
Modules	LARA-R2 TOBY-R2					
	SARA-U2 LISA-U2 LISA-U1					
Attributes	**Syntax**	**PIN required**	**Settings saved**	**Can be aborted**	**Response time**	**Error reference**
	full	No	No	No	-	+CME Error

19.12.1 Description

Configures the serial interface over which CS or PS data shall be routed during a data connection (initiated by the ATD or AT+CGDATA commands), after the CONNECT intermediate result code has been received.

As a factory-programmed setting, the data is routed on the same channel where the connection is established.

The channels are identified by a string made up of a trailing forward slash followed by the device type name and a numerical index, separated by a forward slash. For example:

- "/USBCDC/0" is the 1st USB AT command interface
- "/tyCo/0" is the UART AT command interface
- "/tyCo/2" is the SPI AT command interface
- "/mux/1" is the 2nd multiplexer AT command interface (channel)

The MUX channels are available only if the mux is activated.

Channel identifier	Description
"/tyCo/0"	UART
"/tyCo/2"	SPI
"/USBCDC/0"	USB channel #0
"/USBCDC/1"	USB channel #1
"/mux/1"	MUX channel #1
"/mux/2"	MUX channel #2

Table 36: Examples of channel's identification string

☞ Only AT command interfaces are valid channels. An error result code will be provided if the referenced channels are not AT command interfaces (e.g. SAP channel) or they are not active / available.

☞ See the corresponding module system integration manual for details about the available AT command interfaces in each product. See also +CMUX command description for the list of the available AT command MUX channels in each product.

19.12.2 Syntax

Type	Syntax	Response	Example
Set	AT+UDATACHANNEL=<mode>,<csd_psd_flag>,<ctrl-tid-path>[,<tid-path>[,<connect_flag>]]	[+UDATACHANNEL: <mode>] OK	AT+UDATACHANNEL=1,1,"/mux/1","/mux/2",0 OK
Test	AT+UDATACHANNEL=?	+UDATACHANNEL: (list of supported <mode>s),(list of supported <csd_psd_flag>'s),(list of supported <connect_flag>'s) OK	+UDATACHANNEL: (0-2),(0-1),(0-1) OK

19.12.3 Defined values

Parameter	Type	Description
<mode>	Number	• 0 (factory-programmed value): disable the routing • 1: enable the routing • 2: query current setting for the type of data specified by <csd_psd_flag> and the channel referenced by <ctrl-tid-path>; the <tid-path> must not be set.
<csd_psd_flag>	Number	• 0: configure the channel for a CSD connection • 1: configure the channel for a PSD connection
<ctrl-tid-path>	String	Interface for which the data routing mechanism shall be enabled
<tid-path>	String	Interface to which a data call shall be routed
<connect_flag>	Number	• 0: reporting on the data channel disabled (neither CONNECT nor NO CARRIER result codes are reported) • 1 (default value): reporting on the data channel enabled (CONNECT and NO CARRIER result codes are reported)

19.12.4 Notes

- The information text response for the set command is only provided if a query status is issued (<mode>=2)
- <ctrl-tid-path> or <tid-path> parameters cannot refer to UART and MUX channels at the same time, since MUX channels are established over UART.
- In case <ctrl-tid-path> or <tid-path> parameters refer to a MUX channel, the corresponding MUX channel shall be available when the command is issued (that is MUX protocol active and MUX channel established). Otherwise an error result code is reported. Furthermore, when the data connection is initiated, the MUX channel referred by <tid-path> shall be already established.

19.13 RING line handling +URING

+URING						
Modules	TOBY-L4 TOBY-L200-02S TOBY-L200-03A TOBY-L200-03S TOBY-L210-02S TOBY-L210-03A TOBY-L210-03S TOBY-L210-62S TOBY-L220 TOBY-L280 MPCI-L200-02S MPCI-L200-03S MPCI-L210-02S MPCI-L210-03S MPCI-L220 MPCI-L280					
	LARA-R2 TOBY-R2					
	SARA-U2 LISA-U200-02S LISA-U200-03S LISA-U200-52S LISA-U200-62S LISA-U200-83S LISA-U201 LISA-U260-02S LISA-U270-02S LISA-U270-62S LISA-U270-63S LISA-U270-68S					
Attributes	Syntax	PIN required	Settings saved	Can be aborted	Response time	Error reference
	full	No	NVM	No	-	+CME Error

19.13.1 Description

Configures the RING line handling of the UART interface for other events besides the usual ones, that is the incoming call indication (RING) (linked to the "RING" URC) and the incoming SMS indication (linked to the +CMT and the +CMTI URCs).

The RING line will be asserted when one of the configured events occurs and it remains asserted for 1 s unless another configured event happens (in this case the 1 s timer will be started again). Same behavior will be applied if the events are the incoming call or the incoming SMS.

19.13.2 Syntax

Type	Syntax	Response	Example
Set	AT+URING=<mode>	OK	AT+URING=1 OK
Read	AT+URING?	+URING: <mode> OK	+URING: 1 OK
Test	AT+URING=?	+URING: (list of the supported <mode>s) OK	+URING: (0-3) OK

19.13.3 Defined values

Parameter	Type	Description
<mode>	Number	Configures the RING line handling: • 0 (factory-programmed value): feature disabled (RING line is asserted only on incoming call and incoming SMS) • 1: RING line asserted for all the URCs • 2: RING line asserted for all the incoming data (PPP, sockets in Direct Link mode, FTP in Direct Link mode) • 3: RING line asserted for all URCs and all incoming data (PPP, sockets in Direct Link mode, FTP in Direct Link mode)

19.13.4 Notes

TOBY-L4

- <mode>=1 asserts the RING line for each response, not only for URCs.
- <mode>=2, 3 are not supported.

19.14 CTS line state in case of disabled HW flow control +UCTS

+UCTS						
Modules	LARA-R2 TOBY-R2					
	SARA-U201 SARA-U260-03S SARA-U270-03A SARA-U270-03S SARA-U270-04B SARA-U270-53S SARA-U270-73S SARA-U280-03S LISA-U200-03S LISA-U200-83S LISA-U201					
	SARA-G4 SARA-G340-02S SARA-G340-02X SARA-G350-02A SARA-G350-02S SARA-G350-02X SARA-G350-53S					
Attributes	**Syntax**	**PIN required**	**Settings saved**	**Can be aborted**	**Response time**	**Error reference**
	full	No	NVM	No	-	+CME Error

19.14.1 Description

Configures the CTS line's state (module's output) of the UART interface in case the HW flow control is not enabled. Instead, if the HW flow control is enabled, the CTS line's state is the result of power saving and flow control conditions.

19.14.2 Syntax

Type	Syntax	Response	Example
Set	AT+UCTS=<mode>	OK	AT+UCTS=1 OK
Read	AT+UCTS?	+UCTS: <mode> OK	+UCTS: 1 OK
Test	AT+UCTS=?	+UCTS: (list of the supported <mode>s) OK	+UCTS: (0-1) OK

19.14.3 Defined values

Parameter	Type	Description
<mode>	Number	Configures the CTS line state of the UART interface: • 0 (factory-programmed value): set the CTS line to the ON state (output low) in case of SW or no flow control. • 1: set the CTS line to the OFF state (output high) in case of SW or no flow control.

19.14.4 Notes

- Regardless the AT interface where the command is issued (UART, SPI, USB), it always has effect on the UART CTS line behavior.

19.15 PPP/LCP silent mode configuration +UDCONF=0

+UDCONF=0						
Modules	SARA-G4 SARA-G3 LEON-G1					
Attributes	**Syntax**	**PIN required**	**Settings saved**	**Can be aborted**	**Response time**	**Error reference**
	full	No	No	No	-	+CME Error

19.15.1 Description

Configures the advanced settings for the PPP/LCP silent mode. It means that it is possible to configure whether the module must wait for the first LCP frame or send the first LCP frame while establishing a PPP connection.

19.15.2 Syntax

Type	Syntax	Response	Example
Set	AT+UDCONF=0,<ppp_lcp_silent_mode>	OK	AT+UDCONF=0,0 OK
Read	AT+UDCONF=0	AT+UDCONF: 0,<ppp_lcp_silent_mode> OK	AT+UDCONF=0 AT+UDCONF: 0,0 OK

19.15.3 Defined values

Parameter	Type	Description
<ppp_lcp_silent_mode>	Number	Enables/disables the PPP-LCP silent mode. Allowed values: • 0: silent mode disabled, the module sends the first LCP frame • 1 (factory-programmed value): silent mode enabled, the module waits for the other end to start first

19.16 F-DPCH/enhanced F-DPCH configuration +UDCONF=60

+UDCONF=60						
Modules	TOBY-L2 MPCI-L2					
	SARA-U2 LISA-U200-01S LISA-U200-02S LISA-U200-03S LISA-U200-52S LISA-U200-62S LISA-U200-83S LISA-U201 LISA-U230 LISA-U260 LISA-U270					
Attributes	**Syntax**	**PIN required**	**Settings saved**	**Can be aborted**	**Response time**	**Error reference**
	full	No	NVM	No	-	+CME Error

19.16.1 Description

Configures the F-DPCH/enhanced F-DPCH support.

☞ u-blox cellular modules are certified according to all the capabilities and options stated in the Protocol Implementation Conformance Statement document (PICS) of the module. The PICS, according to 3GPP TS 51.010-2 [84], 3GPP TS 34.121-2 [85], 3GPP TS 36.521-2 [115] and 3GPP TS 36.523-2 [116], is a statement of the implemented and supported capabilities and options of a device. If the user changes the command

settings during the certification process, the PICS of the application device integrating a u-blox cellular module must be changed accordingly.

19.16.2 Syntax

Type	Syntax	Response	Example
Set	AT+UDCONF=60,<F-DPCH_EnhancedF-DPCH_enable>	OK	AT+UDCONF=60,0 OK
Read	AT+UDCONF=60	+UDCONF: 60,<F-DPCH_EnhancedF-DPCH_enable> OK	AT+UDCONF=60 +UDCONF: 60,1 OK

19.16.3 Defined values

Parameter	Type	Description
<F-DPCH_EnhancedF-DPCH_enable>	Number	CPC's UL discontinuous DPCCH transmission support enabled / disabled: • 0: both F-DPCH and Enhanced F-DPCH are disabled • 1: only F-DPCH enabled • 2 (factory-programmed value): both F-DPCH and Enhanced F-DPCH enabled

19.16.4 Notes

LISA-U200-01S / LISA-U230 / LISA-U260-01S / LISA-U270-01S

- The factory-programmed value of <F-DPCH_EnhancedF-DPCH_enable> is 0.

19.17 USB profiles configuration +UUSBCONF

+UUSBCONF						
Modules	TOBY-L2 MPCI-L2					
	SARA-U201 SARA-U260-03S SARA-U270-03A SARA-U270-03S SARA-U270-04B SARA-U270-53S SARA-U270-73S SARA-U280-03S LISA-U200-03S LISA-U200-83S LISA-U201					
Attributes	Syntax	PIN required	Settings saved	Can be aborted	Response time	Error reference
	partial	No	NVM	No	-	+CME Error

19.17.1 Description

The following terminology will be adopted for the +UUSBCONF command description:

- USB function: a USB capability such as RNDIS, UMS (USB Mass Storage), CDC-ECM, etc. It is implemented within a device class.
- USB profile: a set of available USB functions (where available means that the function is presented to the host during the enumeration process), e.g. RNDIS plus CDC-ACM. An identifier (product id, PID) is assigned for each profile.
- USB product: a set of USB profiles, sharing the same PID, one active at a time. It is possible to switch among USB profiles within the same USB product.

Each u-blox cellular module consists of one or more USB products from the point of view of the USB configuration context. Each USB product includes a certain amount of USB profiles. Each USB profile includes a certain amount of USB endpoints, depending on the overall USB functions of the USB profile.

The command configures the active USB profile. The USB profile selection is performed by the specification of the USB product category, the network USB function (when available), and the audio over USB function configuration (enable/disable, when available).

☞ The USB profile switch is not performed run-time. The settings are saved in NVM at the module power off; the new configuration will be effective at the subsequent module reboot.

19.17.2 Syntax

Type	Syntax	Response	Example
Set	AT+UUSBCONF=[<id>[,<network>[,<audio>]]]	OK	AT+UUSBCONF=0,"AUTO",0

Type	Syntax	Response	Example
			OK
Read	AT+UUSBCONF?	+UUSBCONF: <id>,<network>,<audio>,<pid> OK	+UUSBCONF: 0,"RNDIS",0,"0x1144" OK
Test	AT+UUSBCONF=?	+UUSBCONF: (<id> (Corresponding USB functions (string) for <id>),(list of the supported <network>s for <id>),(list of the supported <audio> values for <id>))[, <id>, (Corresponding USB functions (string) for <id>),(list of the supported <network>s for <id>),(list of the supported <audio> values for <id>)[,...]] OK	+UUSBCONF: (0 ("6 CDC-ACM"),(""),()),(2 ("NETWORK, 3 CDC-ACM"),("ECM"),()),(3 ("NETWORK, 1 CDC-ACM"),("RNDIS"),()) OK

19.17.3 Defined values

Parameter	Type	Description
<id>	Number	USB product category number; see Notes for the allowed values and their detailed description
<network>	String	USB network function • "AUTO": network autodetection • "ECM": CDC-ECM device class • "NCM": CDC-NCM device class • "MBIM": MBIM device class • "RNDIS": RNDIS device class
<audio>	Number	Audio over USB function configuration • 0: audio over USB disabled • 1: audio over USB enabled
<pid>	String	String in HEX format with 0x prefix, showing the identifier (PID) of the current profile. Assigned range for PID is 0x1102-0x1FFF.

19.17.4 Notes

- <network> value is only considered if the <id> category includes a network USB function.
- <audio> value is only considered if the <id> category includes a audio over USB function.
- When the <id> category does not include a network USB function or an audio over USB function, the information text response of the read command is an empty string and an empty value for <network> and <audio> respectively.
- Table 37 lists the USB product category associated to a <id>.

<id>	USB Product category
0	Fairly back-compatible: It is a configuration similar to the one implemented in the u-blox LISA-U series, where only CDC-ACMs and, if present, a specific USB function for diagnostic log (e.g. CDC-DIAG) are available.
1	Fairly back-compatible plus audio: It is like the "Fairly back-compatible", but audio over USB function is available; audio over USB function can be enabled or disabled within the same PID.
2	Low/Medium throughput: It is a configuration including a Network USB function, a certain number of CDCs-ACM and, if present, a specific USB for the diagnostic log (e.g. CDC-DIAG). Audio over USB is available, but it can be enabled or disabled. The presence of several USB functions limits the reachable data transfer throughput.
3	High throughput: It is like the "Low/Medium throughput", but only 1 CDC-ACM is available. High throughput data rate can be reached only if the audio over USB function is disabled.

<id>	USB Product category
12	Low/Medium throughput plus SAP: It is a configuration including a Network USB function, a certain number of CDCs-ACM and, if present, a specific USB for the diagnostic log (e.g. CDC-DIAG). SAP over USB is available on the first CDC-ACM, but it can be enabled or disabled. The presence of several USB functions limits the reachable data transfer throughput.
13	High throughput plus SAP: It is like the "High throughput", but only 1 CDC-ACM dedicated to SAP communication. ☞ AT commands can be issued only over the UART interface.

Table 37: USB product configuration

TOBY-L2 / MPCI-L2

- <network>="AUTO", "MBIM", "NCM" are not supported.
- The <audio> parameter is not supported.
- The allowed USB configurations are listed as follows:

Command	PID	Available USB functions	Remark
AT+UUSBCONF=0	0x1141	6 CDC-ACM	
AT+UUSBCONF=2 AT+UUSBCONF=2,"ECM"	0x1143	CDC-ECM (only) + 3 CDC-ACM	
AT+UUSBCONF=3 AT+UUSBCONF=3,"RNDIS"	0x1146	RNDIS (only) + 1 CDC-ACM	Default and factory-programmed value
AT+UUSBCONF=12 AT+UUSBCONF=12,"ECM"	0x1143	CDC-ECM (only) + 1 CDC-ACM (SAP) + 2 CDC-ACM (AT)	
AT+UUSBCONF=13 AT+UUSBCONF=13,"RNDIS"	0x1146	RNDIS (only) + 1 CDC-ACM (SAP)	

Table 38: Supported USB functions

TOBY-L200-00S / TOBY-L200-02S / TOBY-L201 / TOBY-L210-00S / TOBY-L210-02S / TOBY-L210-60S / TOBY-L210-62S / TOBY-L220 / TOBY-L280-02S / MPCI-L200-00S / MPCI-L200-02S / MPCI-L201 / MPCI-L210-00S / MPCI-L210-02S / MPCI-L210-60S / MPCI-L220 / MPCI-L280-02S

- <id>=12 and 13 are not supported.

SARA-U2 / LISA-U2

- <network>="AUTO", "RNDIS", "MBIM", "NCM" are not supported.
- The <audio> parameter is not supported.
- The allowed USB configurations are listed as follows:

Command	PID	Available USB functions	Remark
AT+UUSBCONF=0	0X1102	7 CDC-ACM	Default and factory-programmed value
AT+UUSBCONF=2 AT+UUSBCONF=2,"ECM"	0x1104	CDC-ECM (only) + 4 CDC-ACM	

Table 39: Supported USB functions

19.18 Serial interfaces configuration selection +USIO

+USIO						
Modules	SARA-U201-04A SARA-U201-04B SARA-U201-04X SARA-U270-04B					
	SARA-G340-02S SARA-G340-02X SARA-G350-02A SARA-G350-02S SARA-G350-02X SARA-G350-53S					
Attributes	**Syntax**	**PIN required**	**Settings saved**	**Can be aborted**	**Response time**	**Error reference**
	full	No	NVM	No	-	+CME Error

19.18.1 Description

Selects the serial interfaces' configuration.

The configuration affects how an available serial interface is used, i.e. the meaning of the data flowing over it. Possible usages are:

- Modem interface (AT command)
- Trace interface (diagnostic log)
- Raw interface(e.g. GNSS tunnelling)
- Digital audio interface

A set of configurations, that considers all the available serial interfaces' is called +USIO's configuration variant.

☞ The serial interfaces' configuration switch is not performed run-time. The settings are saved in NVM; the new configuration will be effective at the subsequent module reboot.

☞ A serial interface might not support all the usages. For instance, UART cannot be used as digital audio interface.

19.18.2 Syntax

Type	Syntax	Response	Example
Set	AT+USIO=<requested_variant>	OK	AT+USIO=1 OK
Read	AT+USIO?	+USIO: <requested_variant>, *<active_variant> OK	+USIO: 1, *1 OK
Test	AT+USIO=?	+USIO: Variant=<requested_variant>: [AT=<AT_interface>;] [GNSS=<GNSS_interface>;] [TRACE=<Trace_interface>;] [DIGITAL AUDIO=<Digital_audio_interface>] [+USIO: Variant=<requested_variant>: [AT=<AT_interface>;][GNSS=<GNSS_interface>;][TRACE=<Trace_interface>;][DIGITAL AUDIO=<Digital_audio_interface>] [...]] OK	+USIO: Variant=0: AT="UART"; AT="AUX UART"; TRACE="EXT UART" +USIO: Variant=1: AT="UART"; TRACE="AUX UART"; DIGITAL AUDIO="I2S" +USIO: Variant=2: AT="UART"; AT="AUX UART"; DIGITAL AUDIO="I2S" +USIO: Variant=3: AT="UART"; GNSS="AUX UART"; TRACE="EXT UART" +USIO: Variant=4: AT="UART"; GNSS="AUX UART"; DIGITAL AUDIO="I2S" OK

19.18.3 Defined values

Parameter	Type	Description
<requested_variant>	Number	Requested (stored in NVM for next boot) configuration variant (range 0-255). The factory-programmed value is 1.
<active_variant>	Number	Active (currently used) configuration variant (range 0-255). The factory-programmed value is 1.
<AT_interface>	String	Serial interface configured for AT commands
<GNSS_interface>	String	Serial interface configured for GNSS tunnelling
<Trace_interface>	String	Serial interface configured for diagnostic log
<Digital_audio_interface>	String	Serial interface configured for digital audio

19.18.4 Notes

- Table 40 explains the meaning of <AT_interface>, <GNSS_interface>, <Trace_interface>, <Digital_audio_interface>.

<AT_interface>, <GNSS_interface>, <Trace_interface>, <Digital_audio_interface>	Serial interface description
"UART"	Main UART: It is the full featured UART (9-wire), used as main interface to the host.

<AT_interface>, <GNSS_interface>, <Trace_interface>, <Digital_audio_interface>	Serial interface description
"AUX UART"	Auxiliary UART: It is the general purpose UART (3-wire), with with limited v.24 features.
"EXT UART"	External UART: It is not a real UART, but the SPI interface is used to communicate with an external chip providing SPI to UART conversion. Basically, it is limited to diagnostic log.
"USB"	USB CDC-ACM: It is a virtual UART, providing simulated v.24 features over a USB interface.
"I2S"	I^2S interface: It can be used for the digital audio. See the Chapter 22 for the required configurations.

Table 40: Serial interfaces

SARA-U201-04A / SARA-U201-04B / SARA-U201-04X / SARA-U270-04B

- USB profiles are not considered in this description. A generic USB indication is used. For details on the USB profiles's configurations refer to the +UUSBCONF AT command.
- AUX UART is only available in case <active_variant> is 4, 5 or 6. In case <active_variant> is 4, both UART and AUX UART are AT commands's interfaces.
- In case <active_variant> is 4, 5 or 6, the GNSS tunneling is not possible (even if a USB interface is provided), since the I^2C lines for the communication with a GNSS are not available (they are used for the AUX UART). In this configuration:
  - I^2C devices shall not be connected to the I^2C lines.
  - There are limitations in the usage of +UGPS, +UI2CO and +UEXTDCONF AT commands.
- The allowed (including MUX protocol) configurations are listed as follows:

<active_variant>	AT instance 1	AT instance 2	AT instance 3	Diagnostic log	Mux protocol	Digital audio	GNSS tunneling
0 (default)	UART	Not available	USB	USB (COMBINED-TRACE)	UART	I2S	USB
1	Not available	Not available	USB	UART (BASEBAND-TRACE)	Not available	I2S	USB
2	Not available	Not available	USB	UART (3G_FW-TRACE)	Not available	I2S	USB
3	UART	Not available	USB	USB (BASEBAND-TRACE and 3G_FW-TRACE)	UART	I2S	USB
4	UART	AUX UART	USB	USB (COMBINED-TRACE)	UART	I2S	USB
5	UART	Not available	USB	AUX UART (BASEBAND-TRACE)	UART	I2S	USB
6	AUX UART	Not available	USB	UART (BASEBAND-TRACE)	Not available	I2S	USB

Table 41: Supported USIO variants

SARA-G3

- For information about the <Trace_interface>="EXT UART" configuration, see the module system integration manual
- <Digital_audio_interface>="I2S" and <Trace_interface>="EXT UART" are not supported at the same time, since they share the module's same pins

- The allowed (including MUX protocol) configurations are listed as follows:

<active_variant>	AT instance 1	AT instance 2	Diagnostic log	Mux protocol	Digital audio	GNSS tunneling
0	UART	AUX UART	EXT UART (via SPI interface, using the I2S pins)	UART	Not available	Not available
1 (default)	UART	Not available	AUX UART	UART	I2S	Not available
2	UART	AUX UART	Not available	UART	I2S	Not available
3	UART	Not available	EXT UART (via SPI interface, using the I2S pins)	UART	Not available	AUX UART
4	UART	Not available	Not available	UART	I2S	AUX UART

Table 42: Supported USIO variants

SARA-G4

- The allowed (including MUX protocol) configurations are listed as follows:

<active_variant>	AT instance 1	AT instance 2	Diagnostic log	Mux protocol	Digital audio	GNSS tunneling
0	UART	AUX UART	FT UART	UART	I2S	Not available
1 (default)	UART	Not available	FT UART	UART	I2S	AUX UART

Table 43: Supported USIO variants

SARA-G4

- The AUX UART interface and the GNSS tunneling are not supported.

19.19 Establish ECM data connection +UCEDATA

+UCEDATA						
Modules	SARA-U201 SARA-U260-03S SARA-U270-03A SARA-U270-03S SARA-U270-04B SARA-U270-53S SARA-U270-73S SARA-U280-03S LISA-U200-03S LISA-U200-83S LISA-U201					
Attributes	**Syntax**	**PIN required**	**Settings saved**	**Can be aborted**	**Response time**	**Error reference**
	full	Yes	No	Yes	Up to 3 min	+CME Error

19.19.1 Description

Establishes a data communication between the TE and the network over the CDC-ECM interface. This may include a GPRS attach and a PDP context activation. In case of error, an error result code is displayed. The requested PDP context cannot be already active. When the data transfer is completed, the ECM connection can be released by deactivating the corresponding PDP context via the AT+CGACT command.

19.19.2 Syntax

Type	Syntax	Response	Example
Set	AT+UCEDATA=<cid>,<ecm_id>	OK	AT+UCEDATA=1,0 OK
Read	AT+UCEDATA?	+UCEDATA: [(<cid>,<ecm_id>)] [+UCEDATA: (<cid>,<ecm_id>)] [...]]] OK	+UCEDATA: (1,0) OK
Test	AT+UCEDATA=?	+UCEDATA: (list of the supported <cid>s),(list of the supported <ecm_id>s) OK	+UCEDATA: (1-11),(0-2) OK

19.19.3 Defined values

Parameter	Type	Description
<cid>	Number	Specifies a particular PDP context definition. The range goes from 1 to 11.
<ecm_id>	Number	Specifies the CDC-ECM interface. The range goes from 0 to 2.
<error>	Number	These error result codes will be provided if +CMEE is set to 2: • "+CME ERROR: operation not supported": an incorrect number of parameters is provided or the parameter values are out of range • "+CME ERROR: CDC-ECM is not available": the CDC-ECM connectivity is not present (e.g. because of the current AT+UUSBCONF command configuration) • "+CME ERROR: GPRS context busy": the <cid> refers to an already active PDP context • "+CME ERROR: CDC-ECM is busy": the data communication between the TE and the network over the CDC-ECM interface specified by <ecm_id> is already established • "+CME ERROR: No DHCP Packets received from the DTE": the data communication between the TE and the network over the CDC-ECM interface cannot be established because of a DHCP issue in the TE side

19.19.4 Notes

- The command can be used only if a CDC-ECM interface is present in the active AT+UUSBCONF command configuration.
- IP and DNS addresses are provided to the TE by the network via the DHCP protocol. The module implements a DHCP server, and the TE shall implement a DHCP client. A 25 s timer is used to allow command completion (with error result code), in case the DHCP client is not implemented or not responding.

SARA-U2 / LISA-U2

- Only <ecm_id>=0 is supported, since only one CDC-ECM interface is available (see the AT+UUSBCONF command description).
- CONNECT and NO CARRIER result codes are never sent on the AT interface where the command is issued, because the interface does not enter data mode. For this reason, it is still possible to establish a data connection on the same AT interface (e.g. PPP dial-up), if the CDC-ECM data communication is established. As a consequence of missing indications on the AT interface, the TE is informed about the CDC-ECM data communication release by means of specific indications provided by the CDC-ECM interface (e.g. media disconnection indication).

19.20 Start, stop and configure the OMA-DM client +UOMADM

+UOMADM						
Modules	TOBY-L4006					
	LARA-R202 LARA-R203 TOBY-R2					
	SARA-U201					
Attributes	Syntax	PIN required	Settings saved	Can be aborted	Response time	Error reference
	full	No	No	No	-	+CME Error

19.20.1 Description

Starts, stops and configures the OMA-DM client configuration.

☞ For more information on OMA-DM, see OMA-DM specs [134].

☞ It is necessary to set the correct date and time to be fully operational on the network. This can be done by means of +CCLK command or by enabling the automatic date and time zone update with +CTZU command.

19.20.2 Syntax

Type	Syntax	Response	Example
Set	AT+UOMADM=<mode>[,<sessionID>,<serverInfo>,	OK	AT+UOMADM=1 OK

Type	Syntax	Response	Example
	<encoding_option>,<certinfo_dynamic>,<certtype>]		
Test	AT+UOMADM=?	+UOMADM: (list of supported <mode>'s) OK	+UOMADM: (0-2) OK

19.20.3 Defined values

Parameter	Type	Description
<mode>	Number	Indicates whether the start or stop the OMA-DM client: • 0: stop the OMA-DM client. <sessionID>, <serverInfo>, <encoding_option>, <certinfo_dynamic>, <certtype> must not be specified. • 1: start the OMA-DM client. <sessionID>, <serverInfo>, <encoding_option>, <certinfo_dynamic>, <certtype> must not be specified. • 2: configure the OMA-DM client. <sessionID>, <serverInfo>, <encoding_option>, <certinfo_dynamic>, <certtype> must be specified.
<sessionID>	Number	Specifies the OMA-DM session ID.
<serverInfo>	String	Specifies the OMA-DM server URL and port type.
<encoding_option>	Number	Specifies the encoding used for communicating with the OMA-DM server. Allowed values: • 0: unspecified • 1: WBXML • 2: XML
<certinfo_dynamic>	String	Specifies the certificate used for communicating with the OMA-DM server.
<certtype>	Number	Specifies the type of certificate used for communicating with the OMA-DM server. Allowed values: • 0: DER • 1: PEM • 2: P7B • 2: PFX

19.21 OMA-DM alert +UOMADMALERT

+UOMADMALERT						
Modules	TOBY-L4006					
	LARA-R202 LARA-R203 TOBY-R2					
	SARA-U201					
Attributes	**Syntax**	**PIN required**	**Settings saved**	**Can be aborted**	**Response time**	**Error reference**
	full	No	No	No	~400s (depending on network connectivity)	+CME Error

19.21.1 Description

Allows the Host Device SW to initiate or to stop an OMA-DM session sending a generic alert to the OMA-DM server.

If successful, the +UOMADMALERT: 0 information text response is provided.

☞ For more information on OMA-DM, see OMA-DM specs [134].

19.21.2 Syntax

Type	Syntax	Response	Example
Set	AT+UOMADMALERT=<mode>[,<alert_name>,<alert_type>,<alert_URI>]	+UOMADMALERT: <result_code> OK	AT+UOMADMALERT=1,"dummy", "org.openmobilealliance.dm.firmwareupdate.devicerequest","./DevDetail/SwV" +UOMADMALERT: 0

Type	Syntax	Response	Example
			OK AT+UOMADMALERT=0 OK AT+UOMADMALERT=1,"dummy2", "wrong","./DevDetail/SwV" ERROR
Test	AT+UOMADMALERT=?	+UOMADMALERT: (list of supported <mode>'s) OK	+UOMADMALERT: (0,1) OK

19.21.3 Defined values

Parameter	Type	Description
<mode>	Number	Specifies whether to start or stop an OMA-DM alert session: • 0: stops a client initiated OMA-DM generic alert session. <alert_name>, <alert_type> and <alert_URI> must not be specified. • 1: starts a client initiated OMA-DM generic alert session. <alert_name>, <alert_type> and <alert_URI> must all be specified.
<alert_name>	String	String indicating the OMA-DM generic alert identifier. This parameter is ignored.
<alert_type>	String	The "Type" parameter of a Generic Alert. It must be a reverse domain name URN specifying the media type of the content information in the Data element.
<alert_URI>	String	The "LocURI" parameter of a Generic Alert. Normally, it should hold the URI pointing to a node in the DM Tree.
<result_code>	Number	Return code for the alert notification procedure. Only 0 (success) is supported.

19.22 OMA-DM repository access +UOMADMREP

+UOMADMREP						
Modules	TOBY-L4006					
	LARA-R202 LARA-R203 LARA-R204 TOBY-R2					
	SARA-U201					
Attributes	**Syntax**	**PIN required**	**Settings saved**	**Can be aborted**	**Response time**	**Error reference**
	full	No	NVM	No	-	+CME Error

19.22.1 Description

Allows a direct interaction with the OMA-DM repository. The set command is used to set/read the value to the corresponding node path. The +UUOMADMREP URC indicates a node content has been modified.

☞ The node path (or URI) is case sensitive.

☞ For writing into the DM tree, the URI of a leaf (terminal) node URI has to be specified. For reading, if an internal (non-terminal) node is specified, then a double quoted, slash-separated list of sub-nodes is displayed.

☞ The ODIS (OMA-DM IMEI Sync) nodes which should be set by an external application once (e.g. at first boot) are:
- ./DevDetail/Ext/HostMan
- ./DevDetail/Ext/HostMod
- ./DevDetail/Ext/HostSwV
- ./DevDetail/Ext/HostPlasmaID

These values are stored in NVM. The module automatically attempts to notify the OMA-DM server that these nodes have been changed.

☞ For more information on OMA-DM, see OMA-DM specs [134].

19.22.2 Syntax

Type	Syntax	Response	Example
Generic syntax			
	AT+UOMADMREP=<access_mode>,<node_URI>[,<leaf_node_data>]	OK	
Writing values into the DM tree			
Set	AT+UOMADMREP=1,<node_URI>,<leaf_node_data>	OK	AT+UOMADMREP=1,"./DevInfo/Lang","Italian" OK
Reading values and structure from the DM tree			
Read	AT+UOMADMREP=0,<node_URI>	+UOMADMREP: <node_URI>,<node_data> OK	AT+UOMADMREP=0,"./DevInfo" +UOMADMREP: "./DevInfo","Ext/Mod/Man/Lang/DmV/DevId" OK
			AT+UOMADMREP=0,"./DevInfo/Lang" +UOMADMREP: "./DevInfo/Lang", "Italian" OK
Test	AT+UOMADMREP=?	+UOMADMREP: (list of supported <mode>'s) OK	+UOMADMREP: (0-1) OK
URC		+UUOMADMREP: <node_URI>,<leaf_node_data>	+UUOMADMREP: "./DevInfo/Lang", "Italian"

19.22.3 Defined values

Parameter	Type	Description
<access_mode>	Number	Indicates what action is to be perfomed • 0: read command; it returns the contents of a node • 1: write command; it replaces the contents of a node
<node_URI>	String	Path (URI) to the node in the OMA-DM tree. If the node is a leaf, the contents of the node is displayed. If the node is internal, a quoted, comma separated list of sub-nodes is displayed.
<node_data>	String	Contents of the OMA-DM node, if it is a leaf (terminal) node. List of the sub-nodes, if it is an internal (non-terminal) node. The factory-programmed value for these ODIS nodes is an empty string: • ./DevDetail/Ext/HostMan • ./DevDetail/Ext/HostMod • ./DevDetail/Ext/HostSwV • ./DevDetail/Ext/HostPlasmaID
<leaf_node_data>	String	Contents of the leaf (terminal) node of the DM tree. It must not be specified when reading (<access_mode>=0). It must be specified when writing (<access_mode>=1).

19.22.4 Notes

LARA-R2 / TOBY-R2

- The +UUOMADMREP URC is not supported.

SARA-U201

- To use this command, enable first the OMA-DM client by means of the +UOMADM=1 AT command.
- The +UUOMADMREP URC indicates that a node content has been modified (either locally, via this AT command, or remotely via OMA-DM protocol).

SARA-U201-03A / SARA-U201-03B / SARA-U201-03X / SARA-U201-63B

- The OMA-DM server is not automatically notified of changes to ODIS nodes. The notification can be manually triggered with the +UOMADMALERT AT command.

19.23 Enable/disable OMA-DM unsolicited status messages +UOMASTAT

+UOMASTAT						
Modules	TOBY-L4006 TOBY-L201-02S MPCI-L201-02S					
	LARA-R202 LARA-R203 LARA-R204 TOBY-R2					
	SARA-U201					
Attributes	**Syntax**	**PIN required**	**Settings saved**	**Can be aborted**	**Response time**	**Error reference**
	full	No	No	No	-	+CME Error

19.23.1 Description

To enable/disable OMA-DM unsolicited status messages.

19.23.2 Syntax

Type	Syntax	Response	Example
Set	AT+UOMASTAT=<mode>	OK	AT+UOMASTAT=1 OK
Read	AT+UOMASTAT?	+UOMASTAT: <mode> OK	+UOMASTAT: 0 OK
Test	AT+UOMASTAT=?	+UOMASTAT: (list of supported <mode>'s) OK	+UOMASTAT: (0,1) OK
URC		+UUOMASTAT: <SessionType>, <State>,<Error>	+UUOMASTAT: 1,0,0

19.23.3 Defined values

Parameter	Type	Description
<mode>	Number	Indicates whether the +UUOMASTAT URC is enabled or not: • 0 (factory-programmed value): OMA-DM status indication disabled • 1: OMA-DM status indication enabled
<SessionType>	Number	Indicates the OMA-DM Session Type. Allowed values: • 1: DM Session • 2: download Session
<State>	Number	Indicates the OMA-DM Session State. Allowed values: • 0: session started • 1: session completed successfully • 2: session aborted
<Error>	Number	Indicates the OMA-DM Error Code. Allowed values: • 0: successful (no error) • other: Error code

19.24 Internal temperature monitor +UTEMP

+UTEMP						
Modules	TOBY-L4006 TOBY-L4106 TOBY-L4206 TOBY-L4906-01A TOBY-L4906-51A					
Attributes	**Syntax**	**PIN required**	**Settings saved**	**Can be aborted**	**Response time**	**Error reference**
	partial	No	No	No	-	+CME Error

19.24.1 Description

Returns the values of internal temperature sensors of the specified unit.

The command handling (sensors position and command syntax) depends on the module series:

- TOBY-L4 - The temperature measurement is performed by the following sensors:
  - NTC sensors near to the **oscillator (XO)** and to the **RF (SMARTi-45G)** chip.
  - One sensor near the **Power Management Multi Channel IC (PMIC)**: responsible to shut down the system in case of critical temperature ~110°C.
  - Five sensors available in **baseband core (BB)**

19.24.2 TOBY-L4 Syntax

Type	Syntax	Response	Example
Set	AT+UTEMP=<unit>	OK	AT+UTEMP=0 OK
Read	AT+UTEMP?	+UTEMP: <xo_temp>,<rf_temp>,<pmic_temp>,<bb0_temp>,<bb1_temp>,<bb2_temp>,<bb3_temp>,<bb4_temp>,<bb5_temp> OK	+UTEMP: 31,30,31,36597,36597,37175,29272,35449,37175 OK
Test	AT+UTEMP=?	+UTEMP: (list of supported <unit>) OK	+UTEMP: (0-1) OK

19.24.3 TOBY-L4 Defined values

Parameter	Type	Description
<unit>	Number	Select the measurement unit for value representation: • 0: values in tenth of Celsius degrees returned • 1: values in tenth of Fahrenheit degrees returned
<xo_temp>	Number	Fetched the value of XO temperature of the selected measurement unit; the allowed range depends on the measurement unit: • Celsius degrees: [-40; 140] • Fahrenheit degrees: [-40; 284] • 655355: no valid temperature measure is available
<rf_temp>	Number	Fetched the value of PA temperature of the selected measurement unit; the allowed range depends on the measurement unit: • Celsius degrees: [-40; 140] • Fahrenheit degrees: [-40; 284] • 655355: no valid temperature measure is available
<pmic_temp>	Number	Fetched value of PMIC temperature of the selected measurement unit; the allowed range depends on the measurement unit: • Celsius degrees: [-40; 140] • Fahrenheit degrees: [-40; 284] • 655355: no valid temperature measure is available
<bb0_temp>, <bb1_temp>, <bb2_temp>, <bb3_temp>, <bb4_temp>, <bb5_temp>	Number	Fetched the value in BB temperature in mills of the selected measurement unit: • Celsius degrees: [-40000; 140000] • Fahrenheit degrees: [-40000; 284000] • 655355: no valid temperature measure is available

19.25 Restore factory configuration +UFACTORY

+UFACTORY						
Modules	TOBY-L4 TOBY-L200-02S TOBY-L200-03A TOBY-L200-03S TOBY-L210-02S TOBY-L210-03A TOBY-L210-03S TOBY-L210-62S TOBY-L220 TOBY-L280 MPCI-L200-02S MPCI-L200-03S MPCI-L210-02S MPCI-L210-03S MPCI-L220 MPCI-L280					
	LARA-R2 TOBY-R2					
	SARA-U201 SARA-U260-03S SARA-U270-03A SARA-U270-03S SARA-U270-04B SARA-U270-53S SARA-U270-73S SARA-U280-03S LISA-U200-03S LISA-U200-83S LISA-U201					
	SARA-G4 SARA-G340-02S SARA-G340-02X SARA-G350-02A SARA-G350-02S SARA-G350-02X SARA-G350-53S					
Attributes	**Syntax**	**PIN required**	**Settings saved**	**Can be aborted**	**Response time**	**Error reference**
	full	No	NVM	No	5 s	+CME Error

19.25.1 Description

Force, at the next module boot, the restore of the factory configuration for FS and/or NVM.

When the command is issued, a flag is written into the NVM: no action is done and it will be triggered to be executed only at the next module boot. If, before the next boot, the triggered operation must be deleted, then it is possible to issue the command with parameter 0,0.

19.25.2 Syntax

Type	Syntax	Response	Example
Set	AT+UFACTORY=<fs_op>,<nvm_op>	OK	AT+UFACTORY=0,1 OK
Read	AT+UFACTORY?	+UFACTORY: <fs_op>,<nvm_op> OK	+UFACTORY: 0,1 OK
Test	AT+UFACTORY=?	+UFACTORY: (list of supported <fs_op>s),(list of supported <nvm_op>s) OK	+UFACTORY: (0-2),(0-2) OK

19.25.3 Defined values

Parameter	Type	Description
<fs_op>	Number	FS factory restore type: • 0 (factory-programmed value): no factory restore • 1: FS flash sectors erased • 2: all files stored in FS deleted
<nvm_op>	Number	NVM factory restore type: • 0 (factory-programmed value): no factory restore • 1: NVM flash sectors erased • 2: for internal use only

19.25.4 Notes

TOBY-L4

- Depending on the volume of user files stored in the module, the next boot could be delayed by at most one or two seconds.
- <fs_op>=1 is not supported.

TOBY-L2 / MPCI-L2

- Depending on the volume of user files stored in the module, the next boot could be delayed by at most one or two seconds.
- <fs_op>=1 is not supported.

TOBY-R2

- The +URXDIV command setting is not affected by +UFACTORY NVM restore option (<nvm_op>=1), therefore it needs to be specifically reverted to its factory-programmed setting, if previously changed.

SARA-U2 / LISA-U2

- Depending on <fs_op> and <nvm_op> values, the next module boot could be delayed. Table 44 lists delays of each operation.

Parameter	Value	Delay
<fs_op>	1	2 minutes
	2	No delay (but background garbage collector process needs to run). ☞ If the garbage collector has not had enough time to be executed, then it will be executed at the next power-off/reset, which will take a longer time. If the FS is completely full, then the garbage collector takes about 2 minutes.
<nvm_op>	1	2 s

Table 44: Module boot timing

- The +URXDIV command setting is not affected by the +UFACTORY NVM restore option (<nvm_op>=1), therefore it needs to be specifically reverted to its factory-programmed setting, if previously changed.

SARA-G3

- <fs_op>=2 is not supported.
- If <fs_op>=1 the SMSes stored in the ME message storage are deleted.
- The settings of these commands are restored to the factory-programmed settings by means of the <fs_op>=1: +UCSD, +ICF, +UPSD, +UGAOF, +UGAOP, +UGGGA, +UGGLL, +UGGSA, +UGGSV, +UGPRF, +UGRMC, +UGZDA, +UGSRV, +ULOCCELL, +ULOCGNSS.
- Depending on <fs_op> and <nvm_op> values, the next module boot could be delayed.

Parameter	Value	Delay
<fs_op>	1	9 s
<nvm_op>	1	-

Table 45: SARA-G3 boot timing

SARA-G4

- <fs_op>=2 is not supported.
- <nvm_op>=2 is not supported.
- If <fs_op>=1 the SMSes stored in the ME message storage are deleted.
- The settings of these commands are restored to the factory-programmed settings by means of the <fs_op>=1: +ICF, +UPSD.

19.26 KT remote reset KTCFUN

KTCFUN						
Modules	SARA-U270-53S					
Attributes	**Syntax**	**PIN required**	**Settings saved**	**Can be aborted**	**Response time**	**Error reference**
	full	No	No	No	< 10 s	+CME Error

19.26.1 Description

This KT specific AT command selects the level of facility in the MT.

19.26.2 Syntax

Type	Syntax	Response	Example
Set	KTCFUN=[<fac>]	KTCFUN: <result>	ATKTCFUN=4 KTCFUN: OK
Test	ATKTCFUN=?	KTCFUN: (list of supported <fac>s) OK	KTCFUN: (1-4) OK

19.26.3 Defined values

Parameter	Type	Description
<fac>	Number	Facility to set. Allowed values: • 1: online mode

Parameter	Type	Description
		• 2: offline mode • 3: low power mode; this setting does not have effect • 4 (factoru-programmed value): reset
<result>	String	If the command success, the "KTCFUN: OK" is returned

19.27 KT reading quality information KTDEVSTAT

KTDEVSTAT						
Modules	SARA-U270-53S					
Attributes	**Syntax**	**PIN required**	**Settings saved**	**Can be aborted**	**Response time**	**Error reference**
	full	No	No	No	-	+CME Error

19.27.1 Description

This KT specific AT command retrieves quality information elements from the MT.

☞ In the information text response the strings are not enclosed within double quotes.

☞ The command needs of the SIM to correctly work.

19.27.2 Syntax

Type	Syntax	Response	Example
Action	ATKTDEVSTAT	KTDEVSTAT:<qmv>,<rssi>,<rscp>,<e/i>,<tx>,<apn>,<qos>, ,<srvc>,<ss>,<cs>,<freq>,<rat>,<psc>,<d/n>,<ver>,<imei>,<iccid> OK	KTDEVSTAT:1.1.9,-95,-106,-11,-98,biz.ktfwing.com,5760/42000,0,2,2,1,2100,HSPA,49,SARA-U270,23.41,352253060016648,8939010000 1253978700 OK

19.27.3 Defined values

Parameter	Type	Description
<qmv>	String	Quality Management Version, fixed value 1.1.9
<rssi>	Number	Received Signal Strength Indication, value expressed in dBm, range (-118 ~ -26)
<rscp>	Number	Received Signal Code Power, value expressed in dBm, range (-115 ~ -40)
<ec/io>	Number	Signal to Noise ratio, value expressed in dBm, range (-32 ~ 0)
<tx>	Number	Tx power level, value expressed in dBm, range (-50 ~ -33)
<apn>	String	Access Point Name, maximum length 30 characters. Only the APN set for CID 3 is shown. Value is displayed if it matches one of the following APNs: • bizauth.ktfwing.com • publicip.ktfwing.com • biz.ktfwing.com • Custom APN set with KTUBXCONF AT command
<qos>	String	Quality of Service, maximum length 12 bytes. The value represents a string with the values of maximum uplink/downlink bit rate assigned by the network
 	Number	Block Error Rate, value in range (0 ~ 100)
<srvc>	Number	Service status, value in range (0 ~ 4) • 0: No service • 1: Limited service • 2: Service available • 3: Limited regional service • 4: Power save or deep sleep
<ss>	Number	Socket state, value in range (0 ~ 10) • 0: None, initial state • 1: Data access connecting • 2: Data access connected • 3: TCP access connecting

Parameter	Type	Description
		• 4: TCP access connected • 5: TCP access terminating • 6: TCP access terminated • 7: Data access terminating • 8: Data access terminated • 9: DNS reading • 10: DNS reading complete
<cs>	Number	Call state, value in range (-1 ~ 4) • -1: None • 1: Idle (no call) • 2: Dialling • 3: Incoming call • 4: Busy
<freq>	Number	Frequency Channel Number
<rat>	String	Radio access technology. Value expressed as string. Possible values are: • GSM • GPRS • EGPRS • UMTS • HSDPA • HSUPA • HSPA • LTE (not applicable for 3G modules)
<psc>	Number	Primary Scrambling Code, value in range (0 ~ 511)
<d/n>	String	Device Name, maximum length 20 characters. The module model name.
<ver>	String	Device Version, maximum length 20 characters. The module firmware version
<imei>	String	International Mobile Equipment Identity, maximum length 15.
<iccid>	String	Integrated Circuit Card Identifier, maximum length 20.

19.27.4 Notes

- The APN to be used for FOTA connection shall be configured to CID 3
- On the reception of SMS PUSH of type Modem Quality Information (SMS text = *147359*12358*2*,IP_ADDRESS,PORT) the module needs to activate and internal data context in order to send an HTTP POST request to the FOTA server. The APN and authentication parameters SHALL be configured with the +UPSD command on the profile id 3. The configuration shall also be stored into NVM with the +UPSDA=3,1 command, in order to make possible for the module to load the data connection configuration when it is required.

19.28 KT configuration command KTUBXCONF

KTUBXCONF						
Modules	SARA-U270-53S					
Attributes	**Syntax**	**PIN required**	**Settings saved**	**Can be aborted**	**Response time**	**Error reference**
	full	No	No	No	-	+CME Error

19.28.1 Description

This command let the user specify the telephone number of the inserted SIM card and an optional APN to be recognized as valid for KT FOTA connection.

19.28.2 Syntax

Type	Syntax	Response	Example
Set	ATKTUBXCONF=<phone_number>[,<fota_apn>]	OK	ATKTUBXCONF="1030000000", "custom.kt.fota.apn" OK

Type	Syntax	Response	Example
Read	ATKTUBXCONF?	KTUBXCONF:<phone_number>, <fota_apn> OK	KTUBXCONF:"1030000000", "custom.kt.fota.apn" OK
Test	ATKTUBXCONF=?	KTUBXCONF:(list of supported params) OK	ATKTUBXCONF=? KTUBXCONF:"phone_number", "fota_apn" OK

19.28.3 Defined values

Parameter	Type	Description
<phone_number>	String	Customer phone number
<fota_apn>	String	Additional APN to be recognized as valid for KT FOTA connection on CID 3. See also ATKTDEVSTAT

19.29 Reject international calls KTUCALLREJ

KTUCALLREJ						
Modules	SARA-U270-53S					
Attributes	Syntax	PIN required	Settings saved	Can be aborted	Response time	Error reference
	full	No	No	No	-	+CME Error

19.29.1 Description

Enables/disables the automatic rejection of incoming international calls.

☞ The set command may be issued only when a South Korean SIM card (MCC=450) is inserted.

19.29.2 Syntax

Type	Syntax	Response	Example
Set	ATKTUCALLREJ=<mode>	OK	ATKTUCALLREJ=1 OK
Read	ATKTUCALLREJ?	KTUCALLREJ: <mode> OK	KTUCALLREJ: 1 OK
Test	ATKTUCALLREJ=?	KTUCALLREJ: (list of supported <mode>s) OK	KTUCALLREJ: (0-1) OK

19.29.3 Defined values

Parameter	Type	Description
<mode>	Number	Indicates the rejection configuration: • 0 (factory-programmed value): rejection disabled • 1: rejection enabled

19.29.4 Notes

Prefix	Description
001	KT
002	LGU+
005	SKB
006	SK TelLink
00755	Onse Telecom
003YY	Special Category Telecommunications Operator including SB Interactive
007YY	Special Category Telecommunications Operator including SB Interactive

Prefix	Description
009	Company with no Identification Number

Table 46: Prefixes which force a calling party number to be recognized as an international number

19.30 Request KT OTA opening *KTF*OPENING

*KTF*OPENING						
Modules	SARA-U270-53S					
Attributes	**Syntax**	**PIN required**	**Settings saved**	**Can be aborted**	**Response time**	**Error reference**
	full	Yes	No	No	Up to 3 min	+CMS Error

19.30.1 Description

KT proprietary AT command, which sends a specific SMS message (containing IMSI, ICCID, IMEI, etc.) to initiate KT's OTA opening procedure.

19.30.2 Syntax

Type	Syntax	Response	Example
Set	AT*KTF*OPENING	OK	AT*KTF*OPENING OK

19.31 Display the current UMTS environment KTUUMTSENV

KTUUMTSENV						
Modules	SARA-U270-53S					
Attributes	**Syntax**	**PIN required**	**Settings saved**	**Can be aborted**	**Response time**	**Error reference**
	full	No	No	No	-	+CME Error

19.31.1 Description

Displays the UMTS environment parameters when available.

☞ If the module is not camped only the "OK" final result code is immediately issued.

19.31.2 Syntax

Type	Syntax	Response	Example
Action	ATKTUUMTSENV	[KTUUMTSENV: <uarfcn>,<utran_band>,<psc>,<mcc>,<mnc>,<lac>,<rac>,<ci>,<nom>,<rrc_state>,<drx_cycle_len> <rssi>,<rscp>,<ecio>,<tx_pow>,<ktf_tx_adjust>,<bler>,<mm_service_state>,<mm_reject_cause>,<gmm_service_state>,<gmm_reject_cause>] OK	KTUUMTSENV: 10638,2100,83,222,1,61325,0,52d2388,2,0,128,-92,-25,-5,19,-62,0,5,0,5,0 OK

19.31.3 Defined values

Parameter	Type	Description
<uarfcn>	Number	UTRAN Absolute Radio Frequency Channel Number (UARFCN)
<utran_band>	Number	UTRAN band: • 900: band VIII • 2100: band I
<psc>	Number	Primary Scrambling Code (range 0-511)
<mcc>	Number	Mobile Country Code range (0 - 999)
<mnc>	Number	Mobile Network Code (range 0 - 999)
<lac>	Number	Location Area Code (range 0 - 65535)

Parameter	Type	Description
<rac>	Number	Routing Area Code (range 0 - 65535)
<ci>	Number	Cell Identity in hexadecimal format (range 0h - FFFFh)
<nom>	Number	Network Operation Mode: • 1: network mode of operation I • 2: network mode of operation II • 3: network mode of operation III
<rrc_state>	Number	RRC state: • 0: CELL DCH • 1: CELL FACH • 2: CELL PCH • 3: URA PCH • 4: IDLE • 5: IDLE CCCH
<drx_cycle_len>	Number	DRX cycle length
<rssi>	Number	Received Signal Strength Indication
<rscp>	Number	Received Signal Code Power
<ecio>	Number	Signal to noise ratio
<tx_pow>	Number	Tx power level
<ktf_tx_adjust>	Number	KTF_Tx_Adjust = Tx_Pwr + PathLoss -Node-B UL RSSI (-103 dBm) + TX Constant(21.5 dBm)
<bler>	Number	Block Error Rate (range 1 - 100)
<mm_service_state>	Number	MM service state • 1: no network available • 2: search for network • 3: emergency calls only • 4: limited service • 5: full service • 6: PLMN list available • 7: disabled
<mm_reject_cause>	Number	MM reject cause received (see the 3GPP TS 24.008 [12])
<gmm_service_state>	Number	GMM service state • 1: no network available • 2: search for network • 4: limited service • 5: full service • 7: disabled • 8: detached • 9: no GPRS cell • 10: suspended
<gmm_reject_cause>	Number	GMM reject cause received (see the 3GPP TS 24.008 [12])

19.32 Last gasp configuration +ULGASP

+ULGASP						
Modules	SARA-U201-04A SARA-U201-04B SARA-U201-04X SARA-U270-04B					
Attributes	**Syntax**	**PIN required**	**Settings saved**	**Can be aborted**	**Response time**	**Error reference**
	full	No	NVM	No	< 10 s	+CME Error

19.32.1 Description

The command enables/disables and configures the last gasp feature. The application is automatically triggered by a properly configured GPIO (see GPIO Introduction). The feature supports the sending of a predefined last notification in case of power outage, just before the power goes off. It is assumed that the cellular module is registered to the network when the alarm is triggered; however the command just configures

the feature so it is possible to issue it also if PIN is not inserted. It is possible to enable/disable the +UULGASP URC in order to be notified about the operation result.

☞ This AT command must be issued after a proper configuration of the GPIO has been performed via the +UGPIOC command. Otherwise, if +UGPIOC is issued after +ULGASP, the Last Gasp will work only after a reboot.

☞ The parameters will be set to the values stored in the NVM in case they are omitted in the set command.

19.32.2 Syntax

Type	Syntax	Response	Example
Set	AT+ULGASP=<GPIO_mode>[,[<text>],[<msg_format>],[<tel_number>],[<profile_id>],[<IP_protocol>],[<IP_addr:PORT>],[<method>],[<max_pow_red>],[<urc_enable>]]	OK	AT+ULGASP=0,"Power_loss",0,"+39347123456",3,6,"192.168.100.20:8080",2,, OK
Read	AT+ULGASP?	+ULGASP: <GPIO_mode>,<text>,<msg_format>,<tel_number>,<profile_ID>,<IP_protocol>,<IP_addr:PORT>,<method>,<max_pow_red>,<urc_enable> OK	+ULGASP: 0,"Power_loss",0,"+39347123456",3,6,"192.168.100.20:8080",2,0,1 OK
Test	AT+ULGASP=?	+ULGASP: (list of supported <GPIO_mode>'s),,(list of supported <msg_format>'s),,(list of supported <profile_id>'s),(list of supported <IP_protocol>'s),,(list of supported <method>'s),(list of supported <max_pow_red>'s),(list of supported < urc_enable>'s) OK	+ULGASP: (0-2),,(0-1),,(0-6),(6,17),,(0-3),(0,1),(0,1) OK
URC		+UULGASP: <result>,<bearer>	+UULGASP: 0,1

19.32.3 Defined values

Parameter	Type	Description
<GPIO_mode>	Number	Select the interrupt trigger. Allowed values: • 0 (factory-programmed value): trigger disabled; the following arguments will be ignored • 1: falling edge • 2: rising edge
<text>	String	The string that will be sent upon GPIO movement. Text or binary format can be selected with the <msg_format> parameter. When the text format is selected, a maximum of 160 ASCII characters is allowed. When the binary format is selected, every 8-bit octet of the message must be written as two IRA character long hexadecimal numbers, e.g. an octet with integer value 42 (i.e. 0x2A) must be written as a string of two characters "2A" (IRA 50 and 65). The factory-programmed value is "Last Gasp".
<msg_format>	Number	Format of the <text> parameter. Allowed values: • 0 (factory-programmed value): text • 1: binary
<tel_number>	String	Destination number of the SMS, it is mandatory if <method> is 0 or 2. Factory-programmed value: empty string.
<profile_id>	Number	PSD profile identifier, in range 0-6. See +UPSD AT command.
<IP_protocol>	Number	IP protocol used for socket connection. Allowed values: • 6: TCP • 17 (factory-programmed value): UDP
<IP_addr:PORT>	String	IPv4 or IPv6 server address with the socket port, it is mandatory if <method> is different from 1. Factory-programmed value: empty string.

Parameter	Type	Description
<method>	Number	Notification method, it is the way the application send out the <text message>; in case of fail of the preferred bearer the second one is used. Allowed values: • 0 (factory-programmed value): send SMS • 1: use IP (TCP or UDP) connection • 2: SMS preferred • 3: IP (TCP or UDP) preferred
<max_pow_red>	Number	Maximum power reduction. Allowed values: • 0 (factory-programmed value): no power reduction • 1: 3 dB power reduction for UMTS bands (3G RAT); 2 dB power reduction for GSM bands (2G RAT)
<urc_enable>	Number	Flag determining if the URC is to be issued or not. Allowed values: • 0 (factory-programmed value): disabled • 1: enabled
<result>	Number	Operation result. Allowed values: • 0: success • 1: generic fail
<bearer>	Number	Notification used bearer. Allowed values: • 0: SMS • 1: IP (TCP or UDP) connection

19.32.4 Notes

SARA-U2

- <msg_format> and <text> must be either both specified or both omitted.
- Store in NVM (by means of +UPSDA AT command) the profile defined via +UPSD AT command in order to enable the message via IP (<method>=1 or 3).

20 GPIO

20.1 Introduction

The section describes the AT commands used to configure the GPIO pins provided by u-blox cellular modules.

20.1.1 GPIO functions

On u-blox cellular modules, GPIO pins can be opportunely configured as general purpose input or output. Moreover GPIO pins of u-blox cellular modules can be configured to provide custom functions via +UGPIOC AT command. The custom functions availability can vary depending on the u-blox cellular modules series and version: see Table 47 for an overview of the custom functions supported by u-blox cellular modules.

<gpio_mode>	Output	Input	Network status indication	GNSS supply enable	GNSS data ready	GNSS RTC sharing	Jamming detection	SIM card detection	Headset detection	GSM Tx burst indication	Module operating status indication	Module functionality status indication	I^2S digital audio interface	SPI serial interface	Master clock generation	UART (DSR, DTR, DCD and RI) interface	Wi-Fi enable	Ring indication	Last gasp enable	32.768 kHz output	Pad disabled
	0	1	2	3	4	5	6	7	8	9	10	11	12	13	14	15	16	18	19	32	255
TOBY-L4	*	*						*								*[3]					*
TOBY-L2	*	*	*					*					*		*	*	*				*
TOBY-L201-02S	*	*	*					*									*				*
LARA-R202	*	*	*	*	*			*					*								*
LARA-R203	*	*	*	*	*			*					*								*
LARA-R204	*	*	*					*					*								*
LARA-R211	*	*	*					*					*								*
LARA-R220	*	*	*	*	*			*					*								*
LARA-R280	*	*	*	*	*			*					*								*
TOBY-R2	*	*	*	*[4]	*[5]			*					*								*
SARA-U2	*	*	*	*	*	*		*		*[6]	*	*	*								*
SARA-U201-04A SARA-U201-04B SARA-U201-04X SARA-U270-04B	*	*	*	*	*	*		*		*	*	*	*						*		*
LISA-U2	*	*	*	*	*	*		*		*	*	*	*	*							*
LISA-U200-00S	*	*	*					*		*											*
LISA-U1	*	*	*	*	*	*		*		*											*
SARA-G4	*	*	*																	*	*
SARA-G340 / SARA-G350	*	*	*	*	*	*	*			*											*
LEON-G1	*	*	*	*	*	*			*												*

Table 47: GPIO custom functions overview

The configuration of the GPIO pins (i.e. the setting of the parameters of the +UGPIOC AT command) is saved in the NVM and used at the next power-on.

[3] only RI
[4] Not supported by TOBY-R200-02B-00 and TOBY-R202-02B-00
[5] Not supported by TOBY-R200-02B-00 and TOBY-R202-02B-00
[6] Not supported by SARA-U270-53S, SARA-U270-73S and SARA-U280

20.1.2 GPIO mapping

The number of available GPIO pins and their mapping can vary depending on the u-blox cellular modules series and version. The GPIOs mapping for different u-blox cellular modules is reported in the following tables.

☞ See the corresponding module system integration manual for the functions supported by each GPIO.

<gpio_id>	Pin name	Pin number	Factory-programmed function	Remarks
11	RI	11	UART RI	Only pin 11 can be configured for UART RI line functionality
21	GPIO1	21	Pin disabled	-
22	GPIO2	22	Pin disabled	-
24	GPIO3	24	Pin disabled	-
25	GPIO4	25	Pin disabled	-
60	GPIO5	60	SIM card detection	Only pin 60 can be configured for SIM card detection functionality
61	GPIO6	61	Pin disabled	-
248	GPIO7	248	Pin disabled	-
247	GPIO8	247	Pin disabled	-

Table 48: TOBY-L4 series GPIO mapping

<gpio_id>	Pin name	Pin number	Factory-programmed function	Remarks
10	DSR	10	UART DSR	Only pin 10 can be configured for UART DSR line functionality
11	RI	11	UART RI	Only pin 11 can be configured for UART RI line functionality
12	DCD	12	UART DCD	Only pin 12 can be configured for UART DCD line functionality
13	DTR	13	UART DTR	Only pin 13 can be configured for UART DTR line functionality
21	GPIO1	21	Wi-Fi enable	-
22	GPIO2	22	Pin disabled	-
24	GPIO3	24	Pin disabled	-
25	GPIO4	25	General purpose output (low)	-
50	I2S_WA	50	I^2S word alignment input/output	Only pin 50 can be configured for I^2S word alignment input/output functionality
51	I2S_TXD	51	I^2S transmit data output	Only pin 51 can be configured for I^2S transmit data output functionality
52	I2S_CLK	52	I^2S clock input/output	Only pin 52 can be configured for I^2S clock input/output functionality
53	I2S_RXD	53	I^2S receive data output	Only pin 53 can be configured for I^2S receive data input functionality
60	GPIO5	60	SIM card detection	Only pin 60 can be configured for SIM card detection functionality
61	GPIO6	61	Master clock generation	Only pin 61 can be configured for master clock generation functionality

Table 49: TOBY-L2 series GPIO mapping

<gpio_id>	Pin name	Pin number	Factory-programmed function	Remarks
21	GPIO1	21	Wi-Fi enable	-
22	GPIO2	22	Pin disabled	-
24	GPIO3	24	Pin disabled	-
25	GPIO4	25	General purpose output (low)	-
50	I2S_WA	50	Pin disabled	-
51	I2S_TXD	51	Pin disabled	-
52	I2S_CLK	52	Pin disabled	-
53	I2S_RXD	53	Pin disabled	-

<gpio_id>	Pin name	Pin number	Factory-programmed function	Remarks
60	GPIO5	60	SIM card detection	Only pin 60 can be configured for SIM card detection functionality
61	GPIO6	61	Pin disabled	-

Table 50: TOBY-L201-02S series GPIO mapping

<gpio_id>	Pin name	Pin number	Factory-programmed function	Remarks
21	GPIO1	21	Pin disabled	-
22	GPIO2	22	GNSS supply enable	If "GNSS supply enable" is not supported the pin is by default set to "Pin disabled"
24	GPIO3	24	GNSS data ready	If "GNSS data ready" is not supported the pin is by default set to "Pin disabled"
25	GPIO4	25	General purpose output (low)	-
50	I2S_WA	50	I^2S word alignment input/output	Only pin 50 can be configured for I^2S word alignment input/output functionality
51	I2S_TXD	51	I^2S transmit data output	Only pin 51 can be configured for I^2S transmit data output functionality
52	I2S_CLK	52	I^2S clock input/output	Only pin 52 can be configured for I^2S clock input/output functionality
53	I2S_RXD	53	I^2S receive data output	Only pin 53 can be configured for I^2S receive data input functionality
60	GPIO5	60	SIM card detection	Only pin 60 can be configured for SIM card detection functionality

Table 51: TOBY-R2 series GPIO mapping

<gpio_id>	Pin name	Pin number	Factory-programmed function	Remarks
16	GPIO1	16	Pin disabled	-
23	GPIO2	23	GNSS supply enable	If "GNSS supply enable" is not supported the pin is by default set to "Pin disabled"
24	GPIO3	24	GNSS data ready	If "GNSS data ready" is not supported the pin is by default set to "Pin disabled"
25	GPIO4	25	General purpose output (low)	-
34	I2S_WA	34	I^2S word alignment input/output	Only pin 34 can be configured for I^2S word alignment input/output functionality
35	I2S_TXD	35	I^2S transmit data output	Only pin 35 can be configured for I^2S transmit data output functionality
36	I2S_CLK	36	I^2S clock input/output	Only pin 36 can be configured for I^2S clock input/output functionality
37	I2S_RXD	37	I^2S receive data output	Only pin 37 can be configured for I^2S receive data input functionality
42	GPIO5	42	SIM card detection	Only pin 42 can be configured for SIM card detection functionality

Table 52: LARA-R2 series GPIO mapping

<gpio_id>	Pin name	Pin number	Factory-programmed function	Remarks
20	GPIO1	20	Pad disabled	
21	GPIO2	21	Pad disabled	
23	GPIO3	23	Pad disabled	
24	GPIO4	24	Pad disabled	
51	GPIO5	51	SIM card detection	Only pin 51 can be configured for SIM card detection functionality
39	I2S1_RXD / GPIO6	39	Pad disabled	

<gpio_id>	Pin name	Pin number	Factory-programmed function	Remarks
40	I2S1_TXD / GPIO7	40	Pad disabled	
53	I2S1_CLK / GPIO8	53	Pad disabled	
54	I2S1_WA / GPIO9	54	Pad disabled	

Table 53: LISA-U200-00S GPIO mapping

<gpio_id>	Pin name	Pin number	Factory-programmed function	Remarks
20	GPIO1	20	Pad disabled	
21	GPIO2	21	GNSS supply enable	
23	GPIO3	23	GNSS data ready	Only pin 23 can be configured for GNSS data ready functionality
24	GPIO4	24	GNSS RTC sharing	Only pin 24 can be configured for GNSS RTC sharing functionality
51	GPIO5	51	SIM card detection	Only pin 51 can be configured for SIM card detection functionality
39	I2S1_RXD / GPIO6	39	2nd I^2S receive data input	Only pin 39 can be configured for 2nd I^2S receive data input functionality
40	I2S1_TXD / GPIO7	40	2nd I^2S transmit data output	Only pin 40 can be configured for 2nd I^2S transmit data output functionality
53	I2S1_CLK / GPIO8	53	2nd I^2S clock input/output	Only pin 53 can be configured for 2nd I^2S clock input/output functionality
54	I2S1_WA / GPIO9	54	2nd I^2S word alignment input/ output	Only pin 54 can be configured for 2nd I^2S word alignment input/ output functionality
55	SPI_SCLK / GPIO10	55	SPI Serial Clock Input	Only pin 55 can be configured for SPI Serial Clock Input functionality
56	SPI_MOSI / GPIO11	56	SPI Data Line Input	Only pin 56 can be configured for SPI Data Line Input functionality
57	SPI_MISO / GPIO12	57	SPI Data Line Output	Only pin 57 can be configured for SPI Data Line Output functionality
58	SPI_SRDY / GPIO13	58	SPI Slave Ready Output	Only pin 58 can be configured for SPI Slave Ready Output functionality
59	SPI_MRDY / GPIO14	59	SPI Master Ready Input	Only pin 59 can be configured for SPI Master Ready Input functionality

Table 54: LISA-U2 series (except LISA-U200-00S) GPIO mapping

<gpio_id>	Pin name	Pin number	Factory-programmed function	Remarks
20	GPIO1	20	Pad disabled	
21	GPIO2	21	GNSS supply enable	
23	GPIO3	23	GNSS data ready	Only pin 23 can be configured for GNSS data ready functionality
24	GPIO4	24	GNSS RTC sharing	Only pin 24 can be configured for GNSS RTC sharing functionality
51	GPIO5	51	SIM card detection	Only pin 51 can be configured for SIM card detection functionality

Table 55: LISA-U1 series GPIO mapping

<gpio_id>	Pin name	Pin number	Factory-programmed function	Remarks
16	GPIO1	16	Pad disabled	
23	GPIO2	23	GNSS supply enable	
24	GPIO3	24	GNSS data ready	Only pin 24 can be configured for GNSS data ready functionality

<gpio_id>	Pin name	Pin number	Factory-programmed function	Remarks
				Only pin 24 can be configured for Last Gasp functionality
25	GPIO4	25	GNSS RTC sharing	Only pin 25 can be configured for GNSS RTC sharing functionality
42	SIM_DET	42	SIM card detection	Only pin 42 can be configured for SIM card detection functionality
37	I2S_RXD	37	I^2S receive data input	Only pin 37 can be configured for I^2S receive data input functionality
35	I2S_TXD	35	I^2S transmit data output	Only pin 35 can be configured for I^2S transmit data output functionality
36	I2S_CLK	36	I^2S clock input/output	Only pin 36 can be configured for I^2S clock input/output functionality
34	I2S_WA	34	I^2S word alignment input/output	Only pin 34 can be configured for I^2S word alignment input/output functionality

Table 56: SARA-U2 GPIO mapping

<gpio_id>	Pin name	Pin number	Factory-programmed function	Remarks
16	GPIO1	16	Pad disabled	
23	GPIO2	23	Pad disabled	
24	GPIO3	24	Pad disabled	
25	GPIO4	25	Pad disabled	

Table 57: SARA-G4 GPIO mapping

<gpio_id>	Pin name	Pin number	Factory-programmed function	Remarks
16	GPIO1	16	Pad disabled	
23	GPIO2	23	GNSS supply enable	
24	GPIO3	24	GNSS data ready	Only pin 24 can be configured for GNSS data ready functionality
25	GPIO4	25	GNSS RTC sharing	Only pin 25 can be configured for GNSS RTC sharing functionality

Table 58: SARA-G350 / SARA-G340 GPIO mapping

<gpio_id>	Pin name	Pin number	Factory-programmed function	Remarks
18	HS_DET	18	Headset detection	Only pin 18 can be configured for headset detection functionality
20	GPIO1	20	Pad disabled	
21	GPIO2	21	GNSS supply enable	
23	GPIO3	23	GNSS data ready	Only pin 23 can be configured for GNSS data ready functionality
24	GPIO4	24	GNSS RTC sharing	Only pin 24 can be configured for GNSS RTC sharing functionality

Table 59: LEON-G1 series GPIO mapping

☞ LARA-R2 / TOBY-R2 / SARA-U2 / LISA-U2 / LISA-U1 / SARA-G340 / SARA-G350 / LEON-G1
The "GNSS supply enable", "GNSS data ready" and "GNSS RTC sharing" custom functions can be handled by the +UGPS and the +UGPRF custom AT commands to manage the u-blox GNSS receiver connected to the cellular module and the embedded GPS aiding.

☞ LISA-U200-01S / LISA-U200-02S / LISA-U200-03S / LISA-U200-52S / LISA-U200-62S / LISA-U200-83S / LISA-U201 / LISA-U230 / LISA-U260 / LISA-U270
The AT+UGPIOC=xx,255 or AT+UGPIOC=xx,0 or AT+UGPIOC=xx,1 commands (where xx= 55, 56, 57, 58, 59) cannot be sent over SPI interface (the "+CME ERROR: GPIO busy" error result code is reported). This is because these commands disable the SPI interface.

When the GPIOs 10-14 need to be switched from tristate (<gpio_mode>=255) or GPIO output (<gpio_mode>=0) or GPIO input (<gpio_mode>=1) to SPI functionality (<gpio_mode>=13), a power cycle (reset) is required for the changes to take effect.

☞ TOBY-L4 / TOBY-L2 / LARA-R2 / TOBY-R2 / SARA-U2 / LISA-U2 / LISA-U1
When SIM card detection functionality is enabled, the status is reported by +CIND AT command.

☞ TOBY-L4 / TOBY-L2 / MPCI-L2 / LARA-R2 / TOBY-R2 / SARA-U2 / LISA-U2 / LISA-U1
Both the SIM hot insertion detection feature (configurable through the +UDCONF=50 AT command where supported) and the SIM card detection feature must be enabled to allow a correct implementation of these features.

☞ See the corresponding module system integration manual for the complete overview of all allowed configurations.

20.1.3 Network status indication

When a GPIO pin is configured to provide network status indication, its progress depends on the CS network registration state (see +CREG) and on the module transmission state:

- No service: indicates no network coverage or not registered state
- Registered home network 2G: indicates registered state on home network in 2G RAT
- Registered home network 3G: indicates registered state on home network in 3G RAT
- Registered home network Cat NB1: indicates registered state on home network in Cat NB1
- Registered roaming 2G: indicates registered state with visitor 2G network (roaming in 2G RAT)
- Registered roaming 3G: indicates registered state with visitor 3G network (roaming in 3G RAT)
- Registered roaming Cat NB1: indicates registered state with visitor Cat NB1 network (roaming in Cat NB1)
- Data transmission: indicates voice or data call active either in 2G, 3G or 4G RAT
- Data transmission roaming: indicates voice or data call active either in 2G, 3G or 4G RAT with visitor network

☞ SARA-U2
If the module is in CG class, the PS network registration state determines the network status indication; otherwise the GPIO pin progress depends on the CS network registration state.

The following figures report the allowed progresses for GPIO pin set as network indication: V_H and V_L values are provided in the corresponding module data sheet in the "Generic Digital Interfaces pins" section.

20.1.3.1 No service (no network coverage or not registered)

- Continuous Output / Low

Figure 4: GPIO pin progress for no service

20.1.3.2 Registered home network 2G

- Cyclic Output / High for 100 ms, Output / Low for 2 s

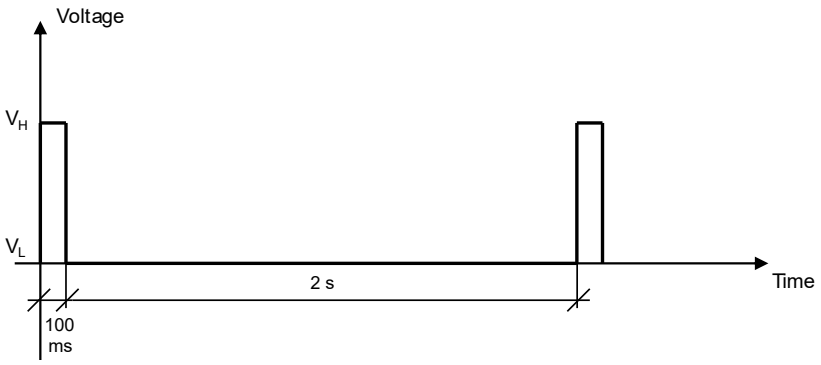

Figure 5: GPIO pin progress for registered home network 2G

20.1.3.3 Registered home network 3G

- Cyclic Output / High for 50 ms, Output / Low for 50 ms, Output / High for 50 ms, Output / Low for 2 s

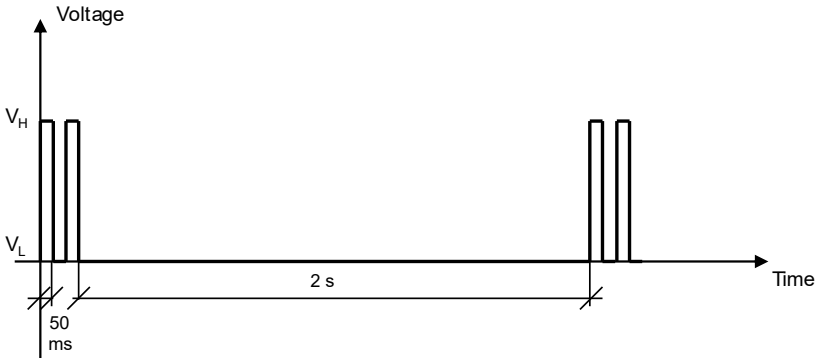

Figure 6: GPIO pin progress for registered home network 3G

20.1.3.4 Registered home network Cat NB1

- Cyclic Output / High for 100 ms, Output / Low for 30 s

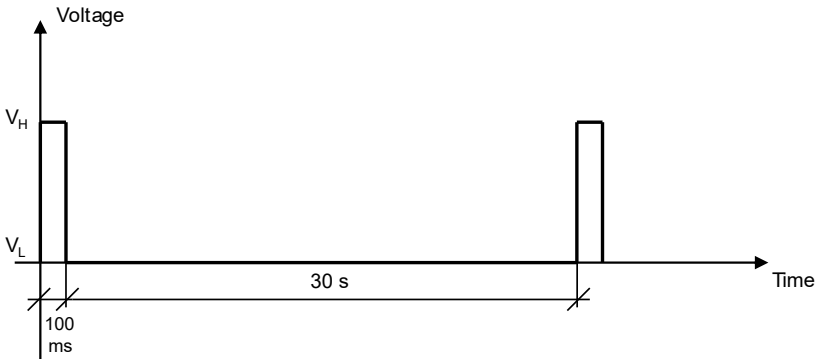

Figure 7: GPIO pin progress for registered home network Cat NB1

20.1.3.5 Registered roaming 2G

- Cyclic Output / High for 100 ms, Output / Low for 100 ms, Output / High for 100 ms, Output / Low for 2 s

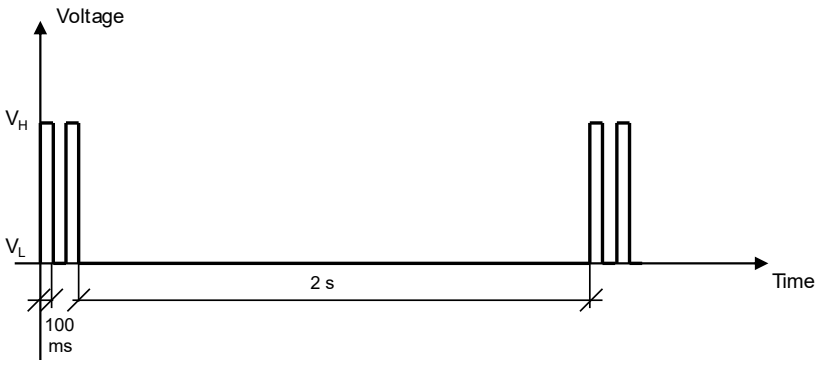

Figure 8: GPIO pin progress for registered roaming 2G

20.1.3.6 Registered roaming 3G

- Cyclic Output / High for 50 ms, Output / Low for 50 ms, Output / High for 50 ms, Output / Low for 100 ms

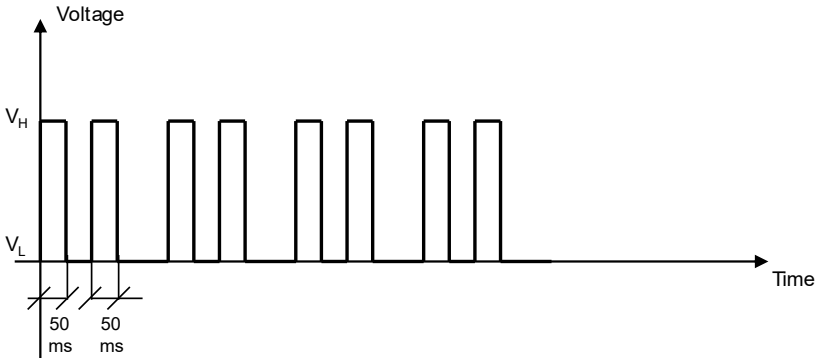

Figure 9: GPIO pin progress for registered roaming 3G

20.1.3.7 Registered roaming Cat NB1

- Cyclic Output / High for 100 ms, Output / Low for 100 ms, Output / High for 100 ms, Output / Low for 30 s

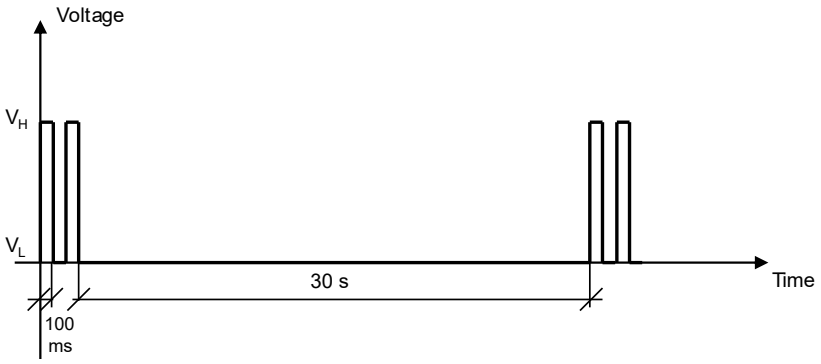

Figure 10: GPIO pin progress for registered roaming Cat NB1

20.1.3.8 Data transmission

- Continuous Output / High

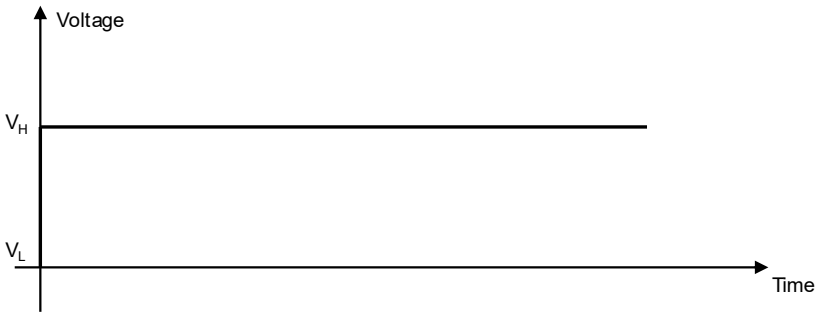

Figure 11: GPIO pin progress for data transmission

20.1.3.9 Data transmission roaming

- Cyclic Output / High for 800 ms, Output / Low for 200 ms

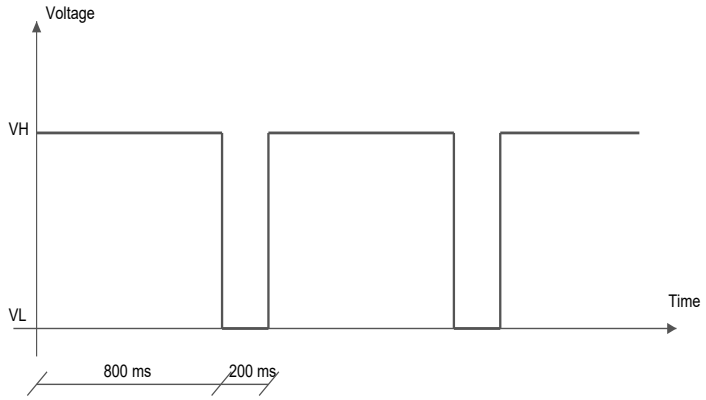

Figure 12: GPIO pin progress for data transmission roaming

☞ TOBY-L200-00S / TOBY-L201 / TOBY-L210-00S / TOBY-L210-60S / LARA-R2 / TOBY-R2 / SARA-U2 / LISA-U2 / LISA-U1 / SARA-G4 / SARA-G3 / LEON-G1
The data transmission roaming is not supported.

☞ TOBY-L2 / LARA-R2 / TOBY-R2
When registered on 4G (LTE) network, the GPIO pin progress is the same as for data transmission (Figure 11) because a PDP context/EPS bearer is available.

20.1.4 Jamming detection

☞ SARA-G340-00S / SARA-G340-01S / SARA-G350-00S / SARA-G350-00X / SARA-G350-01B / SARA-G350-01S
The jamming detection mode is not supported.

When a GPIO pin is configured to provide the jamming detection functionality, its progress depends on the +UCD configuration. If the jamming detection reporting is not configured by +UCD there is no progress on the jamming detection GPIO pin and it remains in the default state (GPIO output V_L).

If the +UCD AT command is opportunely configured to report the jamming detection, the corresponding GPIO pin has the following output progress:

- Jamming ON: GPIO Output / High (V_H)
- Jamming OFF: GPIO Output / Low (V_L)

V_H and V_L values are provided in the corresponding module data sheet in the "Generic Digital Interfaces pins" section.

20.2 GPIO select configuration command +UGPIOC

+UGPIOC						
Modules	TOBY-L4 TOBY-L200-02S TOBY-L200-03A TOBY-L200-03S TOBY-L201-02S TOBY-L210-02S TOBY-L210-03A TOBY-L210-03S TOBY-L210-62S TOBY-L220 TOBY-L280					
	LARA-R2 TOBY-R2					
	SARA-U2 LISA-U2 LISA-U1					
	SARA-G4 SARA-G340 SARA-G350 SARA-G350-53S LEON-G1					
Attributes	**Syntax**	**PIN required**	**Settings saved**	**Can be aborted**	**Response time**	**Error reference**
	partial	No	NVM	No	< 10 s	+CME Error

20.2.1 Description

Configures the GPIOs pins as input, output or to handle a custom function. When the GPIOs pins are configured as output pin, it is possible to set the value.

The test command provides the list of the supported GPIOs, the supported functions and the status of all the GPIOs.

☞ Not all the GPIO functions can be assigned to each GPIO pin. If the configuration is not allowed, an error result code will be returned (error result code 1502 - "+CME ERROR: Select GPIO mode error").
The following custom functions cannot be simultaneously configured on 2 GPIOs:
- Network status indication
- Ring indication
- GNSS supply enable
- GNSS data ready
- GNSS RTC sharing
- SIM card detection
- Headset detection
- GSM Tx burst indication
- Module operating status indication
- Module functionality status indication
- Last gasp trigger

☞ LISA-U200-01S / LISA-U200-02S / LISA-U200-03S / LISA-U200-52S / LISA-U200-62S / LISA-U200-83S / LISA-U201 / LISA-U230 / LISA-U260 / LISA-U270
The AT+UGPIOC=xx,255 or AT+UGPIOC=xx,0 or AT+UGPIOC=xx,1 commands (where xx= 55, 56, 57, 58, 59) cannot be sent over the SPI interface (the error result code "+CME ERROR: GPIO busy" is reported). This is because these commands disable the SPI interface.

☞ For more details regarding the custom functions supported by the u-blox cellular modules and the factory-programmed settings, see GPIO functions and GPIO mapping.

☞ LARA-R2 / TOBY-R2 / SARA-U2 / LISA-U2 / LISA-U1 / SARA-G3 / LEON-G1
To make available the GPIO set as "GNSS supply enable" mode it is needed to stop supplying GNSS receiver with the AT+UGPS=0 command.

☞ TOBY-L2 / LARA-R2 / TOBY-R2 / SARA-U2 / LISA-U2 / LISA-U1 / SARA-G4 / SARA-G340 / SARA-G350
The list of the <gpio_id> with the related <gpio_mode> is not provided in the test command.

20.2.2 Syntax

Type	Syntax	Response	Example
Set	AT+UGPIOC=<gpio_id>,<gpio_mode>[,<gpio_out_val>\<gpio_in_pull>]	OK	AT+UGPIOC=20,0,1 OK
Read	AT+UGPIOC?	+UGPIOC: <gpio_id>,<gpio_mode> [<gpio_id>,<gpio_mode> [....]] OK	+UGPIOC: 20,0 21,3 23,255 24,255

Type	Syntax	Response	Example
			51,7 OK
Test	AT+UGPIOC=?	+UGPIOC: (list of supported <gpio_id>),(list of supported <gpio_mode>),(list of supported <gpio_out_val>\<gpio_in_pull>) [<gpio_id1>,<gpio_mode> ... <gpio_idN>,<gpio_mode>] OK	+UGPIOC: (20,21,23,24,51),(0-5,7,9,255),(0-2) OK

20.2.3 Defined values

Parameter	Type	Description
<gpio_id>	Number	GPIO pin identifier: pin number See the GPIO mapping for the available GPIO pins, their mapping and factory-programmed values on different u-blox cellular modules series and product version.
<gpio_mode>	Number	Mode identifier: configured function See the GPIO functions for custom functions supported by different u-blox cellular modules series and product version. Allowed values: • 0: output • 1: input • 2: network status indication • 3: GNSS supply enable • 4: GNSS data ready • 5: GNSS RTC sharing • 7: SIM card detection • 8: headset detection • 9: GSM Tx burst indication • 10: module operating status indication • 11: module functionality status indication • 12: I^2S digital audio interface • 13: SPI serial interface • 14: master clock generation • 15: UART (DSR, DTR, DCD e RI) interface • 16: Wi-Fi enable • 18: Ring indication • 19: Last gasp enable • 32: 32.768 kHz output • 255: pad disabled
<gpio_out_val>	Number	GPIO output value (for output function <gpio_mode>=0 only): • 0 (default value): low • 1: high
<gpio_in_pull>	Number	GPIO input value (for input function <gpio_mode>=1 only): • 0 (default value): no resistor activated • 1: pull up resistor active • 2: pull down resistor active

20.2.4 Notes

TOBY-L2

- I2S_WA, I2S_TXD, I2S_CLK, I2S_RXD pins can be configured as I2S digital interface. If not all these pins are set in "I2S digital audio interface" mode, the +USPM command attempting to switch the audio path on I2S (AT+USPM=255,255,0,0) will return the "+CME ERROR: operation not allowed" error result code. On the other side, if the audio path is already set as I2S by +USPM command, the +UGPIOC command trying to reconfigure the GPIO mode on any of the I2S pins, will return the "+CME ERROR: GPIO busy" error

result code. By default the audio path is I2S, to use I2S pins as GPIO, the I2S interface must be disabled setting the audio path to 'Null' path by command +USPM command.

- GPIO6 pin can be configured as master clock generation. If this pin is not set in "master clock generation" mode, the +UMCLK command attempting to enable the master clock (<mode> parameter not set to 0) will return the "+CME ERROR: operation not allowed" error result code. On the other side, if the clock generation is already enabled by AT+UMCLK command, the +UGPIOC command trying to reconfigure the GPIO mode on GPIO6, will return the "+CME ERROR: GPIO busy" error result code: issue the AT+UMCLK=0 command before the GPIO6 mode reconfiguration.

LARA-R2 / TOBY-R2

- <gpio_in_pull>=2 is not supported.
- I2S_WA, I2S_TXD, I2S_CLK, I2S_RXD pins can be configured as I2S digital interface. If not all these pins are set in "I2S digital audio interface" mode, the +USPM command attempting to switch the audio path on I2S (AT+USPM=255,255,0,0) will return the "+CME ERROR: operation not allowed" error result code. On the other side, if the audio path is already set as I2S by +USPM command, the +UGPIOC command trying to reconfigure the GPIO mode on any of the I2S pins, will return the "+CME ERROR: GPIO busy" error result code. By default the audio path is I2S, to use I2S pins as GPIO, the I2S interface must be disabled setting the audio path to 'Null' path by command +USPM command.

SARA-U2

- GPIO6 - GPIO9 pins can be configured as I2S digital interface. If not all these pins are set in "I2S digital audio interface" mode, the +USPM command attempting to switch the audio path on I2S will return the "+CME ERROR: operation not allowed" error result code. On the other side, if the audio path is already set as I2S by +USPM command, the +UGPIOC command trying to reconfigure the GPIO mode on any of the I2S pins, will return the "+CME ERROR: GPIO busy" error result code. By default the audio path is I2S, to use I2S pins as GPIO, the I2S interface must be disabled setting audio path to 'Null' path by command +USPM command.

LISA-U2

- GPIO6 - GPIO9 pins can be configured as I2S1 digital interface. If not all these pins are set in "I2S digital audio interface" mode, the +USPM command attempting to switch the audio path on I2S1 will return the "+CME ERROR: operation not allowed" error result code. On the other side, if the audio path is already set as I2S1 by +USPM command, the +UGPIOC command trying to reconfigure the GPIO mode on any the I2S1 pins, will return the "+CME ERROR: GPIO busy" error result code.

LISA-U200-00S / LISA-U200-01S / LISA-U200-02S / LISA-U200-52S / LISA-U200-62S / LISA-U230 / LISA-U260 / LISA-U270

- <gpio_in_pull> is not supported. It is pulled none by default for input function <gpio_mode>=1.

LISA-U1

- <gpio_in_pull> is not supported. It is pulled none by default for input function <gpio_mode>=1.

LEON-G1

- <gpio_in_pull> is not supported. It is pulled none by default for input function <gpio_mode>=1.
- The read command is not supported.

20.3 GPIO read command +UGPIOR

+UGPIOR						
Modules	TOBY-L4 TOBY-L200-02S TOBY-L200-03A TOBY-L200-03S TOBY-L201-02S TOBY-L210-02S TOBY-L210-03A TOBY-L210-03S TOBY-L210-62S TOBY-L220 TOBY-L280					
	LARA-R2 TOBY-R2					
	SARA-U2 LISA-U2 LISA-U1					
	SARA-G4 SARA-G340 SARA-G350 SARA-G350-53S LEON-G1					
Attributes	**Syntax**	**PIN required**	**Settings saved**	**Can be aborted**	**Response time**	**Error reference**
	full	No	No	No	< 10 s	+CME Error

20.3.1 Description

Reads the current value of the specified GPIO pin, no matter whether it is configured as input or output (see the +UGPIOC AT command to define the GPIO function). The parameters range is shown in the information text response to the test command.

20.3.2 Syntax

Type	Syntax	Response	Example
Set	AT+UGPIOR=<gpio_id>	+UGPIOR: <gpio_id>,<gpio_val> OK	AT+UGPIOR=20 +UGPIOR: 20,0 OK
Test	AT+UGPIOR=?	+UGPIOR: (list of supported <gpio_id>s) OK	+UGPIOR: (20, 21) OK

20.3.3 Defined values

Parameter	Type	Description
<gpio_id>	Number	GPIO pin identifier: pin number See the GPIO mapping for the available GPIO pins, their mapping and factory-programmed values on different u-blox cellular modules series and version.
<gpio_val>	Number	GPIO value. Allowed values are 0 and 1.

20.3.4 Notes

- The command works only if the parameter <gpio_mode> of the +UGPIOC AT command is set to 0 or 1.

20.4 GPIO set command +UGPIOW

+UGPIOW						
Modules	TOBY-L4 TOBY-L200-02S TOBY-L200-03A TOBY-L200-03S TOBY-L201-02S TOBY-L210-02S TOBY-L210-03A TOBY-L210-03S TOBY-L210-62S TOBY-L220 TOBY-L280					
	LARA-R2 TOBY-R2					
	SARA-U2 LISA-U2 LISA-U1					
	SARA-G4 SARA-G340 SARA-G350 SARA-G350-53S LEON-G1					
Attributes	**Syntax**	**PIN required**	**Settings saved**	**Can be aborted**	**Response time**	**Error reference**
	full	No	No	No	< 10 s	+CME Error

20.4.1 Description

Sets ("writes") the output of the specified GPIO pin, but only if it is configured in output function (see the +UGPIOC AT command to set the pin as output).

20.4.2 Syntax

Type	Syntax	Response	Example
Set	AT+UGPIOW=<gpio_id>,<gpio_out_val>	OK	AT+UGPIOW=20,1 OK
Test	AT+UGPIOW=?	+UGPIOW: (list of supported <gpio_id>s),(list of supported <gpio_out_val>s) OK	+UGPIOW: (20, 21),(0-1) OK

20.4.3 Defined values

Parameter	Type	Description
<gpio_id>	Number	GPIO pin identifier: pin number See the GPIO mapping for the available GPIO pins, their mapping and factory-programmed values on different u-blox cellular modules series and version.
<gpio_out_val>	Number	GPIO value. Allowed values are 0 and 1.

20.4.4 Notes

- The command works only if the parameter <gpio_mode> of the +UGPIOC AT command is set to 0.

21 File System

21.1 File tags

21.1.1 Description

File system commands have the optional <tag> parameter that allows you to specify a file type when an AT command is issued, to inform the system what to do with it. Application specific files must be saved with the correct type tag, otherwise they are treated as common user files.

Table 60 defines the tags and their specific meanings while Table 61 defines their applicability to module series:

Tag	Name	Specification
"USER"	User file system	This is the default type if the <tag> parameter is omitted in file system AT commands. All generic files can be stored in this manner. Example: `AT+UDWNFILE="foobar",25,"USER"` is the same as `AT+UDWNFILE="foobar",25`
"FOAT"	FOAT file system	This tag is used to specify the file type as a firmware update package. It will place the firmware update package in the proper file cache to be used later by the +UFWINSTALL command.
"AUDIO"	Audio parameters	This tag is used to store audio calibration file "audio_gain_calibration<X>.xml" and "voice<X>.nvm" in the selected profile <X>=0,1. The profile is stored into NVM by using ATZ<X>. ☞ The "audio_gain_calibration<X>.xml" and "voice<X>.nvm" files can be overwritten with AT&W<X> command.
"FOTA_EXT"	Firmware for FOTA procedure	This tag has to be used to store the firmware file for the FOTA procedure using a dedicated channel of the USB CDC-ACM interface.
"AUDIO_EXT"	Audio configuration	This tag is used to read or download audio configuration (see Audio parameters tuning section). The audio configuration file includes the NVM settings of the following AT commands (where applicable): • +CLVL AT command • +CRSL AT command • +UI2S AT command • +UMAFE AT command • +USAFE AT command • +UMSEL AT command • +UMGC AT command • +USGC AT command • +USPM AT command • +UTI AT command To download the audio configuration in the module, use the +UDWNFILE command. To read configuration from the module, use the +URDFILE command.
"ECALL_EXT"	eCall controller configuration and custom eCall prompts	This tag is used to read, download and delete the eCall controller configuration or download and delete custom eCall prompts (see eCall Prompts section). Reading and downloading commands use a dedicated channel of the USB CDC-ACM interface. To download the eCall controller configuration or custom eCall prompts in the module, use the +UDWNFILE command. To read the eCall controller configuration from the module, use the +URDFILE command. To delete eCall controller configuration or custom eCall prompts from the module, use the +UDELFILE command.
"PROFILE"	Profile files	This tag refers to the profile files that can be loaded on to the module to support Mobile Network Operators (MNOs) specific configurations. For more details on the profiles, see the +UMNOPROF command. The +URDFILE and +ULSTFILE AT commands are not allowed with this tag, the user can only download or delete these files.

Tag	Name	Specification
"GNSS"	GNSS files	This tag has to be used to store the firmware file for the internal GNSS receiver.
"CALLSRV_EXT"	Emergency Call Number List (ECNL) management	This tag is used to manage the Emergency Call Number List (ECNL) file stored in NVM.

Table 60: Tag meanings

Module	"USER"	"FOAT"	"AUDIO"	"ECALL_EXT"	"FOTA_EXT"	"AUDIO_EXT"	"PROFILE"	"GNSS"	"CALLSRV_EXT"
TOBY-L4				*	*	*			*
TOBY-L2	*		*						
MPCI-L2	*		*						
TOBY-L200-00S TOBY-L201-01S TOBY-L201-02S TOBY-L210-00S TOBY-L210-60S	*								
MPCI-L200-00S MPCI-L201-01S MPCI-L201-02S MPCI-L210-00S MPCI-L210-60S	*								
LARA-R2	*								
TOBY-R2	*								
SARA-U2	*								
LISA-U2	*								
LISA-U1	*								
SARA-G340 / SARA-G350	*								
SARA-G4	*								
LEON-G1	*								

Table 61: Tag applicabilities to module series

☞ TOBY-L4
The <tag> parameter is mandatory.

21.2 Download file +UDWNFILE

+UDWNFILE						
Modules	TOBY-L4 TOBY-L200-02S TOBY-L200-03A TOBY-L200-03S TOBY-L201 TOBY-L210-02S TOBY-L210-03A TOBY-L210-03S TOBY-L210-62S TOBY-L220 TOBY-L280 MPCI-L200-02S MPCI-L200-03S MPCI-L201 MPCI-L210-02S MPCI-L210-03S MPCI-L220 MPCI-L280					
	LARA-R2 TOBY-R2					
	SARA-U2 LISA-U2 LISA-U1					
	SARA-G4 SARA-G340 SARA-G350 SARA-G350-53S LEON-G1					
Attributes	**Syntax**	**PIN required**	**Settings saved**	**Can be aborted**	**Response time**	**Error reference**
	partial	No	No	No	-	+CME Error

21.2.1 Description

Stores (writes) a file into the file system:

- The stream of bytes can be entered after the '>' prompt has been provided to the user. The file transfer is terminated exactly when <size> bytes have been entered and either "OK" final result code or an error result code is returned. The feed process cannot be interrupted i.e. the command mode is re-entered once the user has provided the declared number of bytes.
- If the file already exists, the data will be appended to the file already stored in the file system.
- If the data transfer stops, after 20 s the command is stopped and the "+CME ERROR: FFS TIMEOUT" error result code (if +CMEE=2) is returned.
- If the module shuts down during the file storing, all bytes of the file will be deleted.
- If an error occurs during the file writing, the transfer is aborted and it is up to the user to delete the file.

☞ TOBY-L4/TOBY-L2/MPCI-L2/LARA-R2/TOBY-R2/SARA-U2/LISA-U2/LISA-U1/SARA-G4/SARA-G3/LEON-G1
The available free memory space is checked before starting the file transfer. If the file size exceeds the available space, the "+CME ERROR: NOT ENOUGH FREE SPACE" error result code will be provided (if +CMEE=2).

☞ TOBY-L2/MPCI-L2/LARA-R2/TOBY-R2/SARA-U2/LISA-U2/LISA-U1/SARA-G4/SARA-G3/LEON-G1
If the HW flow control is disabled (AT&K0), a data loss could be experienced. So the HW flow control usage is strongly recommended.

☞ TOBY-L4
The '>' prompt after which the stream of bytes can be entered will be provided to the user on a dedicated channel of the USB CDC-ACM interface.
If the command is issued on the AT interface over an IP connection, the DTE will send the binary data over the TCP connection to the DCE.
The DTE monitors the TCP data port for the binary data transfer (for more details on the TCP/IP port configuration, see the <tcp_data_port> parameter of the +UIFCONF AT command). After the establishment of the TCP connection from the DTE to the specific port, the DTE will start the file transfer. The '>' prompt is not provided to the user on the AT interface over an IP connection. The DCE will close the connection when the specific amount of data is received, or an error result code occurs. Once the AT command is issued, the DCE will listen on the specific port and will close it after the timeout expiration (20 s). The DCE will close the TCP connection, if no data are received for 30 s.

21.2.2 Syntax

Type	Syntax	Response	Example
Set	AT+UDWNFILE=<filename>,<size>[,<tag>] > <text>	OK	AT+UDWNFILE="filename",36,"USER" > The 36 downloaded bytes of the file! OK
Download audio configuration			
Set	AT+UDWNFILE=<filename>,<size>,"AUDIO_EXT"	OK	AT+UDWNFILE="audioconfig",4873,"AUDIO_EXT" OK

21.2.3 Defined values

Parameter	Type	Description
<filename>	String	File name. For file system file name and data size limits see File system limits.
<size>	Number	File size expressed in bytes. For file system file name and data size limits see File system limits.
<tag>	String	Optional parameter that specifies the application file type. FILE TAGS table lists the allowed <tag> strings.
<text>	String	Stream of bytes.

21.2.4 Notes

- Issue the AT+ULSTFILE=1 command to retrieve the available user space in the file system.
- Two files with different types can have the same name, i.e. AT+UDWNFILE="testfile",20,"USER" and AT+UDWNFILE="testfile",43,"AUDIO".

TOBY-L4

- The supported tags are "FOTA_EXT", "AUDIO_EXT" and "CALLSRV_EXT" .
- "FOTA_EXT" tag:
  - The string set with the <filename> parameter is ignored.
  - The command is used to store the firmware file to be used for the FW installation procedure.
- "AUDIO_EXT" tag:
  - The tag is used to download the audio configuration file (audioconf file).
  - Current active audio configuration can be obtained using the +URDFILE AT command.

  - After successful download, the audio configuration is validated. If it is not valid, the configuration is not applied and the downloaded file is deleted.
  - After successful application, the module needs to be restarted to activate the configuration.
  - The downloaded file is deleted after the processing is done.
- "CALLSRV_EXT" tag:
  - The string set with the <filename> parameter is ignored.
  - The command is used to store the ECNL(Emergency Call Number List) file to be used for dialed numbers treated as emergency calls.

TOBY-L2 / MPCI-L2

- If the file already exists, the file will be overwritten.
- The special filename "update.zip" is used for the FW update file. The usage of this filename will write the file to a different FS partition where it cannot be retrieved by file system AT commands. Do not use "update.zip" for any user data.

LARA-R2 / TOBY-R2 / SARA-U2 / LISA-U2 / LISA-U1 / SARA-G4 / SARA-G3 / LEON-G1

- The <tag> parameter is not supported.

LISA-U200-00S / LISA-U200-01S / LISA-U230 / LISA-U260-01S / LISA-U270-01S

- If the file already exists, the file will be overwritten.

LISA-U1

- The <tag> parameter is not supported.
- If the file already exists, the file will be overwritten.
- If the module shuts down during the file storing, all the bytes successfully sent to the module will be stored.

21.3 List files information +ULSTFILE

+ULSTFILE						
Modules	TOBY-L200-02S TOBY-L200-03A TOBY-L200-03S TOBY-L201 TOBY-L210-02S TOBY-L210-03A TOBY-L210-03S TOBY-L210-62S TOBY-L220 TOBY-L280 MPCI-L200-02S MPCI-L200-03S MPCI-L201 MPCI-L210-02S MPCI-L210-03S MPCI-L220 MPCI-L280					
	LARA-R2 TOBY-R2					
	SARA-U2 LISA-U2 LISA-U1					
	SARA-G4 SARA-G340 SARA-G350 SARA-G350-53S LEON-G1					
Attributes	**Syntax**	**PIN required**	**Settings saved**	**Can be aborted**	**Response time**	**Error reference**
	partial	No	No	No	-	+CME Error

21.3.1 Description

Retrieves some information about the FS. Depending on the specified <op_code>, it can print:

- List of files stored into the FS
- Remaining free FS space expressed in bytes
- Size of the specified file expressed in bytes

☞ The available free space on FS in bytes reported by the command AT+ULSTFILE=1 is the theoretical free space including the space occupied by the hidden and temporary files which are not displayed by the AT +ULSTFILE=0.

21.3.2 Syntax

Type	Syntax	Response	Example
Generic syntax			
Set	AT+ULSTFILE[=<op_code>[,<param1>[,<param2>]]]	+ULSTFILE: [<param3>,...[,<paramN>]] OK	AT+ULSTFILE=1 +ULSTFILE: 236800 OK
List of files stored into the FS			
Set	AT+ULSTFILE[=0[,<tag>]]	+ULSTFILE: [<filename1>[,<filename2>[,...[,<filenameN>]]]]	AT+ULSTFILE= +ULSTFILE: "filename"

Type	Syntax	Response	Example
		OK	OK
Remaining free FS space expressed in bytes			
Set	AT+ULSTFILE=1[,<tag>]	+ULSTFILE: <free_fs_space> OK	AT+ULSTFILE=1 +ULSTFILE: 236800 OK
Size of the specified file			
Set	AT+ULSTFILE=2,<filename>[,<tag>]	+ULSTFILE: <file_size> OK	AT+ULSTFILE=2,"filename" +ULSTFILE: 784 OK

21.3.3 Defined values

Parameter	Type	Description
<op_code>	Number	Allowed values are: • 0 (default value): lists the files belonging to <tag> file type • 1: gets the free space for the specific <tag> file type • 2: gets the file size expressed in bytes, belonging to <tag> type (if specified)
<tag>	String	Specifies the application file type. FILE TAGS table lists the allowed <tag> strings.
<filename1>,.., <filenameN>	String	File name. For file system file name and data size limits see File system limits.
<free_fs_space>	Number	Available free space on FS in bytes.
<file_size>	Number	Size of the file specified with the <filename> parameter.
<param1>	Number / String	Type and supported content depend on related <op_code> (details are given above).
<param2>	Number / String	Type and supported content depend on related <op_code> (details are given above).

21.3.4 Notes

LARA-R2 / TOBY-R2 / SARA-U2 / LISA-U2 / LISA-U1 / SARA-G4 / SARA-G3 / LEON-G1

- The <tag> parameter is not supported.

21.4 Read file +URDFILE

+URDFILE						
Modules	TOBY-L4 TOBY-L200-02S TOBY-L200-03A TOBY-L200-03S TOBY-L201 TOBY-L210-02S TOBY-L210-03A TOBY-L210-03S TOBY-L210-62S TOBY-L220 TOBY-L280 MPCI-L200-02S MPCI-L200-03S MPCI-L201 MPCI-L210-02S MPCI-L210-03S MPCI-L220 MPCI-L280					
	LARA-R2 TOBY-R2					
	SARA-U2 LISA-U2 LISA-U1					
	SARA-G4 SARA-G340 SARA-G350 SARA-G350-53S LEON-G1					
Attributes	**Syntax**	**PIN required**	**Settings saved**	**Can be aborted**	**Response time**	**Error reference**
	partial	No	No	No	-	+CME Error

21.4.1 Description

Retrieves a file from the file system.

TOBY-L4
The stream of file bytes will be provided to the user on a dedicated channel of the USB CDC-ACM interface. If the command is issued on the AT interface over an IP connection, the DCE will send the binary data over the TCP connection to the DTE.
The DTE monitors the TCP data port for the binary data transfer (for more details on the TCP/IP port configuration, see the <tcp_data_port> parameter of the +UIFCONF AT command). After the establishment of the TCP connection from the DTE to the specific port, the DCE starts the file transfer. The '>' prompt is not provided to the user on the AT interface over an IP connection. The DCE will close the connection when the specific amount of data is transmitted, or an error result code occurs. Once the AT

command is issued, the DCE will listen on the specific port and will close it after the timeout expiration (20 s). The DCE will close the TCP connection, if no data are received for 30 s.

21.4.2 Syntax

Type	Syntax	Response	Example
Set	AT+URDFILE=<filename>[,<tag>]	+URDFILE: <filename>,<size>,<data> OK	AT+URDFILE="filename" +URDFILE: "filename",36,"these bytes are the data of the file" OK

21.4.3 Defined values

Parameter	Type	Description
<filename>	String	File name. For file system file name and data size limits, see File system limits.
<tag>	String	The optional parameter <tag> specifies a different application file type. FILE TAGS table lists the allowed <tag> strings.
<size>	Number	File size, in bytes.
<data>	String	File content.

21.4.4 Notes

- The returned file data is displayed as an ASCII string of <size> characters in the range [0x00,0xFF]. At the end of the string, <CR><LF> are provided for user convenience and visualization purposes.

TOBY-L4

- The <tag> parameter is mandatory.
- The syntax of the information text response to the set command is `+URDFILE: <size>`. Then the user should start receiving <size> bytes of file data on a dedicated channel of the USB CDC-ACM interface. At the completion the `OK` final result code is displayed.
- The supported tags are "AUDIO_EXT" and "CALLSRV_EXT".
- "AUDIO_EXT" tag:
  - It is used to read the audio configuration file by setting the <filename> parameter to "audioconfig".
- "CALLSRV_EXT" tag:
  - The string set with the <filename> parameter is ignored.
  - The command is used to read the ECNL(Emergency Call Number List) from file in NVM.

LARA-R2 / TOBY-R2 / SARA-U2 / LISA-U2 / LISA-U1 / SARA-G4 / SARA-G3

- The <tag> parameter is not supported.

LEON-G1

- The <tag> parameter is not supported.
- The filename is not enclosed within double quotes.

21.5 Partial download file +URDBLOCK

+URDBLOCK						
Modules	TOBY-L200-02S TOBY-L200-03A TOBY-L200-03S TOBY-L201 TOBY-L210-02S TOBY-L210-03A TOBY-L210-03S TOBY-L210-62S TOBY-L220 TOBY-L280 MPCI-L200-02S MPCI-L200-03S MPCI-L201 MPCI-L210-02S MPCI-L210-03S MPCI-L220 MPCI-L280					
	LARA-R2 TOBY-R2					
	SARA-U2 LISA-U200-02S LISA-U200-03S LISA-U200-52S LISA-U200-62S LISA-U200-83S LISA-U201 LISA-U260-02S LISA-U270-02S LISA-U270-62S LISA-U270-63S LISA-U270-68S					
	SARA-G4 SARA-G340 SARA-G350 SARA-G350-53S LEON-G1					
Attributes	**Syntax**	**PIN required**	**Settings saved**	**Can be aborted**	**Response time**	**Error reference**
	partial	No	No	No	-	+CME Error

21.5.1 Description

Retrieves a file from the file system.

☞ Differently from +URDFILE command, this command allows the user to read only a portion of the file, indicating the offset and amount of bytes.

21.5.2 Syntax

Type	Syntax	Response	Example
Set	AT+URDBLOCK=<filename>,<offset>,<size>[,<tag>]	+URDBLOCK: <filename>,<size>,<data> OK	AT+URDBLOCK="filename",0,20 +URDBLOCK: "filename",20,"these bytes are the " OK

21.5.3 Defined values

Parameter	Type	Description
<filename>	String	File name. For file system file name and data size limits see File system limits.
<offset>	Number	Offset in bytes from the beginning of the file.
<size>	Number	Number of bytes to be read starting from the <offset>.
<data>	String	Content of the file read.
<tag>	String	The optional parameter <tag> specifies a different application file type. FILE TAGS table lists the allowed <tag> strings.

21.5.4 Notes

- The returned file data is displayed as an ASCII string of <length> characters in the range [0x00,0xFF]. At the end of the string, <CR><LF> are provided for user convenience and visualization purposes.
- In case a size larger than the whole file size is required the command returns the file size only, indicating the amount of bytes read.
- In case an offset larger than the whole file size is required, the "+CME ERROR: FFS file range" error result code is triggered.

LARA-R2 / TOBY-R2 / SARA-U2 / LISA-U2 / LISA-U1

- The <tag> parameter is not supported.

SARA-G4 / SARA-G3 / LEON-G1

- The <tag> parameter is not supported.
- The <filename> is not enclosed in double quotes in the information text response of the set command.

21.6 Delete file +UDELFILE

+UDELFILE						
Modules	TOBY-L4 TOBY-L200-02S TOBY-L200-03A TOBY-L200-03S TOBY-L201 TOBY-L210-02S TOBY-L210-03A TOBY-L210-03S TOBY-L210-62S TOBY-L220 TOBY-L280 MPCI-L200-02S MPCI-L200-03S MPCI-L201 MPCI-L210-02S MPCI-L210-03S MPCI-L220 MPCI-L280					
	LARA-R2 TOBY-R2					
	SARA-U2 LISA-U2 LISA-U1					
	SARA-G4 SARA-G340 SARA-G350 SARA-G350-53S LEON-G1					
Attributes	**Syntax**	**PIN required**	**Settings saved**	**Can be aborted**	**Response time**	**Error reference**
	partial	No	No	No	-	+CME Error

21.6.1 Description

Deletes a stored file from the file system.

☞ If <filename> file is not stored in the file system the following error result code will be provided: "+CME ERROR: FILE NOT FOUND".

21.6.2 Syntax

Type	Syntax	Response	Example
Set	AT+UDELFILE=<filename>[,<tag>]	OK	AT+UDELFILE="filename","USER" OK

21.6.3 Defined values

Parameter	Type	Description
<filename>	String	File name. For file system file name and data size limits see File system limits.
<tag>	String	The optional parameter <tag> specifies a different application file type. FILE TAGS table lists the allowed <tag> strings.

21.6.4 Notes

TOBY-L4

- The <tag> parameter is mandatory.
- The supported tags are "FOTA_EXT" and "CALLSRV_EXT" .
- "FOTA_EXT" tag:
  - The string set with the <filename> parameter is ignored.
  - The currently stored firmware file used for FW installation procedure will be deleted.
- "CALLSRV_EXT" tag:
  - The string set with the <filename> parameter is ignored.
  - The command is used to delete the ECNL(Emergency Call Number List) file stored in NVM.

LARA-R2 / TOBY-R2 / SARA-U2 / LISA-U2 / LISA-U1

- The <tag> parameter is not supported.

SARA-G4 / SARA-G3 / LEON-G1

- The <tag> parameter is not supported.
- The command immediately returns the "OK" final result code but the actual erasing is completed in background, and the freed space is not immediately available.

21.7 File system limits

21.7.1 Allowed characters in filenames

A filename cannot contain the following characters: / * : % | " < > ?

21.7.2 Limits

Here below are listed the maximum file name length, the maximum data size of the file system and the maximum number of files for the u-blox cellular modules.

Maximum file name length:

- LISA-U230 / LISA-U260 / LISA-U270 / LISA-U1 / SARA-G4 / SARA-G3 / LEON-G1 - 47 characters
- TOBY-L2 / MPCI-L2 / LARA-R2 / TOBY-R2 / SARA-U2 / LISA-U200 / LISA-U201 - 248 characters

☞ TOBY-L200-00S / TOBY-L210-00S / TOBY-L210-60S / MPCI-L200-00S / MPCI-L210-00S / MPCI-L210-60S
The file system AT commands are not supported.

☞ SARA-U260-00S / SARA-U270-00S / SARA-U270-00X / SARA-U280-00S / LISA-U200-00S / LISA-U200-01S / LISA-U200-02S / LISA-U200-52S / LISA-U200-62S
The maximum file name length is 47 characters.

☞ TOBY-L4
The <filename> parameter is ignored.

Maximum file size:

- TOBY-L4 / TOBY-L2 / MPCI-L2 / SARA-U260 / SARA-U270 / SARA-U280 / LISA-U2 - 5242880 bytes
- LARA-R2 / TOBY-R2 / SARA-U201 - File size limited by the available file system space retrieved by +ULSTFILE=1 command
- LISA-U1 - 1458176 bytes
- SARA-G4 - 315904 bytes
- SARA-G340-02S / SARA-G340-02X / SARA-G350-02A / SARA-G350-02S / SARA-G350-02X - 692532 bytes
- SARA-G340-00S / SARA-G340-01S / SARA-G350-00S / SARA-G350-00X / SARA-G350-01B / SARA-G350-01S / LEON-G1 - 1048575 bytes

Maximum number of files:

- TOBY-L4 - The maximum number of files that can be stored is 1.
- TOBY-L2 / MPCI-L2 - The theoretical maximum number of files that can be stored is 1714.
- LARA-R2 / TOBY-R2 / SARA-U2 / LISA-U2 / LISA-U1 - The theoretical maximum number of files that can be stored is 1100.
- SARA-G340 / SARA-G350 / LEON-G1 - The theoretical maximum number of files that can be stored is 135.
- SARA-G4 - The theoretical maximum number of files that can be stored is 617.

☞ The theoretical maximum file size and the maximum number of files also includes system, hidden and temporary files whose number is not statically predictable, so the actual numbers can be less than stated.

22 Audio interface

This section describes a set of u-blox proprietary AT commands to be used for the audio features configuration:

- +USPM command sets the audio path
- +UI2S command configures I^2S interfaces
- +UPAR, +USAR, +UPLAYFILE, +URECFILE, +USTOPFILE, +UAPLAY, +UAREC, +UTGN, +URNG, +UMSM commands manage players
- +UMCLK, +UEXTDCONF manage the external codec or other external audio IC
- +UDCONF=30 configures allowed speech codecs
- +UDCONF=33 sets volume or disables waiting call tone
- +UMAAT command checks the external hardware audio path

Audio parameters tuning section describes commands for the audio parameters tuning.

eCall section describes commands specific for eCall.

DTMF section describes commands specific for DTMF detection and generation.

Other standard commands available for audio configuration are listed as follows: +CALM, +CRSL, +CLVL, +CMUT, +VTD, +VTS, +UVTS.

The <silent> parameter in +CALA command refers to the alarm tone.

22.1 Audio path mode setting +USPM

+USPM						
Modules	TOBY-L4906-50A TOBY-L200-02S TOBY-L200-03A TOBY-L200-03S TOBY-L210-02S TOBY-L210-03A TOBY-L210-03S TOBY-L210-62S TOBY-L220-02S TOBY-L280					
	LARA-R202 LARA-R203 LARA-R204 LARA-R211 LARA-R280 TOBY-R2					
	SARA-U2 LISA-U200-01S LISA-U200-02S LISA-U200-03S LISA-U200-52S LISA-U200-62S LISA-U200-83S LISA-U201 LISA-U230 LISA-U260 LISA-U270 LISA-U120 LISA-U130					
	SARA-G340 SARA-G350 SARA-G350-53S LEON-G1					
Attributes	**Syntax**	**PIN required**	**Settings saved**	**Can be aborted**	**Response time**	**Error reference**
	full	No	NVM	No	-	+CME Error

22.1.1 Description

Sets the audio path mode enabling the different audio paths (audio uplink and downlink) of the module for different use cases. For example, the uplink path can be switched from the handset microphone to the headset microphone and the downlink path can be switched from the handset earpiece to the loudspeaker.

Besides the routing via analog or digital interface, the uplink and downlink paths are characterized by a set of audio parameters (gains, digital filters, echo canceller parameters). The uplink paths and downlink paths can be configured through the set of commands described in the Audio parameters tuning section.

The command is used to choose the uplink and downlink path used.

Only one single uplink path and one single downlink path can be used. Parallel paths are not managed.

22.1.2 TOBY-L2 / LARA-R2 / TOBY-R2 / SARA-U2 / LISA-U2 / LISA-U1 / SARA-G3 / LEON-G1 syntax

Type	Syntax	Response	Example
Set	AT+USPM=<main_uplink>,<main_downlink>,<alert_sound>,<headset_indication>[,<vmic_ctrl>]	OK	AT+USPM=1,1,0,0 OK
Read	AT+USPM?	+USPM: <main_uplink>,<main_downlink>,<alert_sound>,<headset_indication>,<vmic_ctrl> OK	+USPM: 0,0,0,0,2 OK
Test	AT+USPM=?	+USPM: (list of supported <main_uplink>s),(list of supported <main_	+USPM: (0-9,255),(0-9,255),(0),(0),(2)

Type	Syntax	Response	Example
		downlink>s),(list of supported <alert_sound>s),(list of supported <headset_indication>s),(list of supported <vmic_ctrl>s) OK	OK

22.1.3 TOBY-L2 / LARA-R2 / TOBY-R2 / SARA-U2 / LISA-U2 / LISA-U1 / SARA-G3 / LEON-G1 defined values

Parameter	Type	Description
<main_uplink>	Number	Specifies the audio input path used for speech. See Notes for the allowed and default values.
<main_downlink>	Number	Specifies the audio output path used for speech. See Notes for the allowed and default values.
<alert_sound>	Number	Specifies whether the alert sounds in idle mode are played on the main downlink path (same downlink path as speech; see <main_downlink> parameter) or on the loudspeaker: • 0: main downlink path • 1: loudspeaker See Notes for the allowed and default values.
<headset_indication>	Number	Specifies if the speech path is switched on the headset or not when the headset is inserted: • 0: the headset plug insertion is not indicated to the module; thus the module does not change automatically the speech audio path and leaves it as specified in <main_uplink>, <main_downlink> parameters • 1: the headset plug insertion is indicated to the module and thus the module automatically switches the speech audio path to headset mode (headset microphone for uplink and headset earpiece for downlink). The indication is carried by the rising edge of HS_DET signal, thus HS_DET pin should be connected to the audio headset connector. For more details about this connection, see the corresponding System Integration Manual. When the headset plug is removed, an opposite falling edge will be generated and the module will automatically switch back to the main audio path (<main_uplink>, <main_downlink>). See Notes for allowed and default values.
<vmic_ctrl>	Number	Specifies the control mode for microphones voltage supply (VMIC). • 0: VMIC is synchronously switched on/off with the microphone amplifier; i.e. while the module is idle or is using the I^2S input line, the microphone amplifiers and VMIC are switched off • 1: VMIC is switched always on • 2: VMIC is switched always off See Notes for allowed and default values.

22.1.4 TOBY-L4 syntax

Type	Syntax	Response	Example
Set	AT+USPM=<audio_path>,<profile_type>	OK	AT+USPM=1,1 OK
Read	AT+USPM?	+USPM: <audio_path>,<profile_type> OK	+USPM: 0,0 OK
Test	AT+USPM=?	+USPM: (list of supported <audio_path>s),(list of supported <profile_type>s) OK	+USPM: (0-1),(0-4) OK

22.1.5 TOBY-L4 defined values

Parameter	Type	Description
<audio_path>	Number	Specifies the audio path.

Parameter	Type	Description
		See Notes for allowed and default values.
<profile_type>	Number	Specifies the profile for selected audio path. See Notes for allowed and default values.

22.1.6 Notes

TOBY-L4

- Allowed and default values for parameters:
  - **<audio_path>**:
    - 0 (factory-programmed value): analog audio path
    - 1: digital audio path
  - **<profile_type>**:
    - 0 (factory-programmed value): headset profile
    - 1: handsfree profile
    - 2: flat profile
    - 3: custom 0 profile
    - 4: custom 1 profile
- The audio path should not be changed from analog to digital and vice versa during an active call as it will result in unpredictable behaviour.
- When audio path mode is changed, the following configurations are applied:
  - configuration for I^2S (if using digital audio path see +UI2S for details, if analog - configuration is predefined)
  - configuration for microphone analog and digital gains (for details see +UMAFE)
  - configuration for speaker analog and digital gains (for details see +USAFE)
  - configuration for the active microphone for the analog audio path (for details see +UMSEL)
  - configuration for the digital gain scal_i2s_in of the i2s port (for details see +UMGC)
  - configuration for the digital gain scal_i2s_out of the i2s port (for details see +USGC)
  - configuration for uplink voice muting is unmuted (for details see +CMUT)
- Flat profile has all audio path processing blocks disabled.
- Custom profiles are available for customer customization.

TOBY-L2

- Allowed and default values for parameters:
  - **<main_uplink>**
    - 0: uplink path 0 via I2S
    - 1 (factory-programmed value): uplink path 1 via I2S
    - 2: uplink path 2 via I2S
    - 3: uplink path 3 via I2S
    - 4: uplink path 4 via I2S
    - 255: null path; no audio interface is enabled
  - **<main_downlink>**
    - 0: downlink path 0 via I2S
    - 1 (factory-programmed value): downlink path 1 via I2S
    - 2: downlink path 2 via I2S
    - 3: downlink path 3 via I2S
    - 4: downlink path 4 via I2S
    - 255: null path; no audio interface is enabled
  - **<alert_sound>**
    - 0 (factory-programmed value): main downlink path
  - **<headset_indication**
    - 0 (factory-programmed value): not considered
  - **<vmic_ctrl**
    - 2 (default value): VMIC is switched always off

- The <main_uplink> path 255 can be combined only with the <main_downlink> path 255. This is the NULL path mode. When selected, audio is disabled and I2S pins can be reconfigured. Parameters <alert_sound>, <headset_indication and <vmic_ctrl are not considered in this mode.
- The <main_uplink> paths from 0 to 4 can be combined only with the <main_downlink> path with the same index (I2S is used).
- The I2S pin are the GPIO pins (GPIO6-GPIO9). If not all these pins are set in "I^2S digital audio interface" mode (see the AT+UGPIOC command, <gpio_mode>=12), the +USPM command attempting to switch the audio path from NULL mode to I2S mode will return a "+CME ERROR: operation not allowed" error result code. On the other side, if the audio path is already set as I2S by the +USPM command, the +UGPIOC command trying to reconfigure the GPIO mode on any I2S pin will return a "+CME ERROR: GPIO busy" error result code. To configure GPIO6-GPIO9 in any mode other than "I2S digital audio interface", the +USPM command must previously switch the audio path in NULL path mode (<main_uplink>=255, <main_downlink>=255).

LARA-R2 / TOBY-R2 / SARA-U2

- Allowed and default values for parameters:
  - **<main_uplink>**
    - 0: uplink path 0 via I2S
    - 1 (default value): uplink path 1 via I2S
    - 2: uplink path 2 via I2S
    - 3: uplink path 3 via I2S
    - 4: uplink path 4 via I2S
    - 255: null path; no audio interface is enabled
  - **<main_downlink>**
    - 0: downlink path 0 via I2S
    - 1 (default value): downlink path 1 via I2S
    - 2: downlink path 2 via I2S
    - 3: downlink path 3 via I2S
    - 4: downlink path 4 via I2S
    - 255: null path; no audio interface is enabled
  - **<alert_sound>**
    - 0 (default value): main downlink path
  - **<headset_indication**
    - 0 (default value): not considered
  - **<vmic_ctrl**
    - 2 (default value): VMIC is switched always off
- The uplink path 255 (null path) can be combined only with the <main_downlink> path 255. This is the NULL path mode. In this audio path mode, no audio path is ever enabled and the I2S pin can be reconfigured. Parameters <alert_sound>, <headset_indication and <vmic_ctrl are not considered in this mode.
- For I2S profile settings, it is recommended to set same index 0 to 4 for <main_uplink> and <main_downlink> (<main_uplink> = <main_downlink>). Other combinations are deprecated.
- The profile 4 is reserved for hands-free application. The factory-programmed settings are suitable for hands-free devices. For this profile tuning, see the SARA-U2 Audio Interface Application Note [162].
- The I2S pins are the GPIO pins (GPIO6-GPIO9). If not all these pins are set in "I^2S digital audio interface" mode (see the AT+UGPIOC command, <gpio_mode>=12), the +USPM command attempting to switch the audio path from NULL mode to I2S mode will return a "+CME ERROR: operation not allowed" error result code. On the other side, if the audio path is already set as I2S by the +USPM command, the +UGPIOC command trying to reconfigure the GPIO mode on any I2S pin will return a "+CME ERROR: GPIO busy" error result code. To configure GPIO6-GPIO9 in any mode other than "I2S digital audio interface", the +USPM command must have been previously used to switch the audio path in NULL path mode (<main_uplink>=255, <main_downlink>=255).

LISA-U2

- Allowed and default values for parameters:
  - **<main_uplink>**
    - 0: uplink path 0 via I2S

    - 1 (default value): uplink path 1 via I2S
    - 2: uplink path 2 via I2S
    - 3: uplink path 3 via I2S
    - 4: uplink path 4 via I2S
    - 5: uplink path 5 via I2S1
    - 6: uplink path 6 via I2S1
    - 7: uplink path 7 via I2S1
    - 8: uplink path 8 via I2S1
    - 9: uplink path 9 via I2S1
  - **<main_downlink>**
    - 0: downlink path 0 via I2S
    - 1 (default value): downlink path 1 via I2S
    - 2: downlink path 2 via I2S
    - 3: downlink path 3 via I2S
    - 4: downlink path 4 via I2S
    - 5: downlink path 5 via I2S1
    - 6: downlink path 6 via I2S1
    - 7: downlink path 7 via I2S1
    - 8: downlink path 8 via I2S1
    - 9: downlink path 9 via I2S1
  - **<alert_sound>**
    - 0 (default value): alert sounds are played on main downlink path
  - **<headset_indication**
    - 0 (default value): headset indication is not considered
  - **<vmic_ctrl**
    - 2 (default value): VMIC is switched always off
- For I2S profile settings, it is recommended to set same index 0 to 4 for <main_uplink> and <main_downlink> (<main_uplink> = <main_downlink>). Other combinations are deprecated.
- The <main_uplink> paths from 0 to 4 can be combined with the <main_downlink> paths from 0 to 4 (I2S is used).
- The <main_uplink> paths from 5 to 9 can be combined with the <main_downlink> paths from 5 to 9 (I2S1 is used).
- The profile 4 is reserved for hands-free application. The factory-programmed settings are suitable for hands-free devices. For this profile tuning, see the LISA-U2 Audio Interface Application Note [78].
- The I2S1 pins are the GPIO pins (GPIO6-GPIO9). If not all these pins are set to "I^2S digital audio interface" mode (see the AT+UGPIOC command, <gpio_mode>=12), the command attempting to switch the audio path on I2S1 will return a "+CME ERROR: operation not allowed" error result code. On the other side, if the audio path is already set to I2S1 by the +USPM command, the +UGPIOC command trying to reconfigure the GPIO mode on any I2S1 pin will return a "+CME ERROR: GPIO busy" error result code.

LISA-U1

- Allowed and default values for parameters:
  - **<main_uplink>**
    - 0: (pins MIC_P, MIC_N)
    - 1 (default value): headset microphone (pins: MIC_P, MIC_N)
    - 2: I^2S input line (pin I2S_RXD)
    - 4: hands-free microphone (pins: MIC_P, MIC_N)
  - **<main_downlink>**
    - 0: normal earpiece (pins: SPK_N, SPK_P)
    - 1 (default value): mono headset (pins: SPK_N, SPK_P)
    - 3: loudspeaker (pins: SPK_N, SPK_P)
    - 4: I^2S output line (pin I2S_TXD)
  - **<alert_sound>**
    - 0 (default value): alert sounds are played on the main downlink path
  - **<headset_indication**

    - 0 (default value): headset indication is not considered
  - **<vmic_ctrl**
    - 2 (default value): VMIC is switched always off
- The following table summarizes the allowed combination of parameters <main_uplink> and <main_downlink> (<alert_sound>, <headset_indication must always be set to 0):

Uplink\Downlink	0 - Earpiece	1 - Mono headset	2 - Unused	3 - Loudspeaker	4 - I^2S output
0 - Handset	x	x		x	
1 - Headset	x	x		x	
2 - I^2S input					x
3 - Unused					
4 - Hands-free mic	x	x		x	

SARA-G340 / SARA-G350

- Allowed and default values for parameters:
  - **<main_uplink>**
    - 0 (default value): handset microphone (pins: MIC_P, MIC_N, MIC_BIAS, MIC_GND)
    - 1: headset microphone (pins: MIC_P, MIC_N, MIC_BIAS, MIC_GND)
    - 2: I^2S input line (pin I2S_RXD)
    - 4: hands-free microphone (pins: MIC_P, MIC_N, MIC_BIAS, MIC_GND)
  - **<main_downlink>**
    - 0 (default value): normal earpiece (pins: SPK_N, SPK_P)
    - 1: mono headset (pins: SPK_N, SPK_P)
    - 3: loudspeaker (pins: SPK_N, SPK_P)
    - 4: I^2S output line (pin I2S_TXD)
  - **<alert_sound>**
    - 0 (default value): alert sounds are played on the main downlink path
  - **<headset_indication**
    - 0 (default value): headset indication is not considered
  - **<vmic_ctrl**
    - 0 (default value): VMIC is switched on/off
- The following table summarizes the allowed combination of parameters <main_uplink> and <main_downlink> (<alert_sound>, <headset_indication must always be set to 0):

Uplink\Downlink	0 - Earpiece	1 - Mono headset	2 - Unused	3 - Loudspeaker	4 - I^2S output
0 - Handset	x	x		x	
1 - Headset	x	x		x	
2 - I^2S input					x
3 - Unused					
4 - Hands-free mic	x	x		x	

LEON-G1

- Allowed and default values for parameters:
  - **<main_uplink>**
    - 0 (default value): handset microphone (pins: MIC_BIAS1, MIC_GND1)
    - 1: headset microphone (pins: MIC_BIAS2, MIC_GND2)
    - 2: I^2S input line (pin I2S_RXD)
  - **<main_downlink>**
    - 0 (default value): normal earpiece (pins: HS_P, GND)
    - 1: mono headset (pins: HS_P, GND)
    - 3: loudspeaker (pins: SPK_P, SPK_N)
    - 4: I^2S output line (pin I2S_TXD)
  - **<alert_sound>**
    - 0: alert sounds are played on the main downlink path
    - 1 (default value): alert sounds are played on loudspeaker
  - **<headset_indication**
    - 0: headset indication is not considered

- 1 (default value): headset indication is considered

o **<vmic_ctrl**
- 0 (default value): VMIC is switched on/off
- 1: VMIC is always on
- 2: VMIC is always off

- The following table summarizes the allowed combination of parameters <main_uplink>, <main_downlink>, <alert_sound>, <headset_indication:

Allowed values	Uplink	Downlink	Alert on	Headset indication
0, 0, 0, 1	Handset	Earpiece	Main path	Considered
0, 0, 1, 1	Handset	Earpiece	Loudspeaker	Considered
0, 0, 0, 0	Handset	Earpiece	Main path	Not considered
0, 0, 1, 0	Handset	Earpiece	Loudspeaker	Not considered
0, 3, 0, 0	Handset	Loudspeaker	Main path	Considered
0, 3, 0, 1	Handset	Loudspeaker	Main path	Not considered
0, 1, 0, 0	Handset	Mono headset	Main path	Not considered
1, 1, 0, 0	Handset	Mono headset	Main path	Not considered
1, 0, 0, 0	Handset	Earpiece	Main path	Not considered
1, 0, 1, 0	Handset	Earpiece	Loudspeaker	Not considered
1, 3, 0, 0	Handset	Loudspeaker	Main path	Not considered
2, 4, 0, 0	I^2S input	I^2S output	Main path	Not considered

22.2 I^2S digital interface mode +UI2S

+UI2S						
Modules	TOBY-L4 TOBY-L200-02S TOBY-L200-03A TOBY-L200-03S TOBY-L210-02S TOBY-L210-03A TOBY-L210-03S TOBY-L210-62S TOBY-L220-02S TOBY-L280					
	LARA-R202 LARA-R203 LARA-R211 LARA-R280 TOBY-R2					
	SARA-U2 LISA-U200-01S LISA-U200-02S LISA-U200-03S LISA-U200-52S LISA-U200-62S LISA-U200-83S LISA-U201 LISA-U230 LISA-U260 LISA-U270 LISA-U120 LISA-U130					
	SARA-G340 SARA-G350 SARA-G350-53S LEON-G1					
Attributes	**Syntax**	**PIN required**	**Settings saved**	**Can be aborted**	**Response time**	**Error reference**
	full	No	NVM	No	-	+CME Error

22.2.1 Description

Configures the I^2S digital audio interface to be used when digital audio paths are chosen (see the +USPM command description, <main_uplink>=I2S RX, <main_downlink>=I2S TX).

The I^2S TX and RX data lines can be connected to two different access points of the uplink and downlink audio path (see the module audio block diagram in the Audio parameters tuning introduction).

The digital audio interface is I2S.

The I^2S interface can be configured either in Master or in Slave mode through the <I2S_Master_Slave> parameter:

- In Master mode, the module generates the WA (word alignment) and CLK (clock) signals
- In Slave mode, the remote device must generate the WA (word alignment) and CLK (clock) signals

The sample rate of transmitted and received words is configurable through the <I2S_sample_rate> parameter.

Furthermore synchronization between data, clock and word alignment lines can be configured in different modes through the <I2S_mode> parameter:

- PCM modes (short synchronization signal)
- Normal I^2S modes (long synchronization signal)

For details about I^2S technical features in PCM and Normal I^2S mode, see the system integration manual for the corresponding module.

The physical I^2S port is composed of 4 pins. The signals are:

- **I2S_WA** (Word Alignment): output signal in Master mode, input signal in Slave mode; it synchronizes the data word; the WA cycle frequency is <I2S_sample_rate>, while WA cycle timing depends on the mode (see PCM modes, PCM modes timing diagrams, Normal I²S modes and Normal I²S modes timing diagrams)
- **I2S_TXD** (Transmitted Data): output signal; sequence of data bits, most significant bit transmitted first. Each word is 16 bits long, in 2's complement format with the configured I²S sample rate
- **I2S_CLK** (Clock): output signal in Master mode, input signal in Slave mode; it synchronizes the bits composing the data words; CLK frequency and edge synchronization with TXD/RXD signals depends on <I2S_mode> and the configured I²S sample rate. See PCM modes and Normal I²S modes
- **I2S_RXD** (Received Data): input signal; sequence of data bits, most significant bit read first. Each word is 16 bits long, in 2's complement format with the configured I²S sample rate

☞ The I²S pins are mapped in the following way:

Product	I2S_WA	I2S_TXD	I2S_CLK	I2S_RXD
TOBY-L4	50	51	52	53
TOBY-L2	50	51	52	53
TOBY-R2	50	51	52	53
LARA-R2	34	35	36	37
LISA-U2 (first interface)	41	42	43	44
LISA-U2 (second interface)	54 (pin: I2S1_WA)	40 (pin: I2S1_TXD)	53 (pin: I2S1_CLK)	39 (pin: I2S1_RXD)
LISA-U1	41	42	43	44
SARA-U2	34	35	36	37
SARA-G3	34	35	36	37
LEON-G1	26	27	28	29

Table 62: I²S pins mapping on u-blox cellular modules

22.2.2 Syntax

Type	Syntax	Response	Example
Set	AT+UI2S=<I2S_mode>,<I2S_port>,<I2S_clk_wa>[,<I2S_sample_rate>[,<I2S_Master_Slave>]]	OK	AT+UI2S=10,1,1,5,1 OK
Read	AT+UI2S?	+UI2S: <I2S_mode>,<I2S_port>,<I2S_clk_wa>,<I2S_sample_rate>,<I2S_Master_Slave> [...] (for all the I²S interfaces) OK	+UI2S: 4,1,1,4,1 +UI2S: 10,3,1,5,0 OK
Test	AT+UI2S=?	+UI2S: (list of supported <I2S_mode>s),(list of supported <I2S_port>s),(list of supported <I2S_clk_wa>)[,(list of supported <I2S_sample_rate>),(list of supported <I2S_Master_Slave>)] OK	+UI2S: (0-13),(1,3),(0-1),(0-8),(0-1) OK

22.2.3 Defined values

Parameter	Type	Description
<I2S_mode>	Number	Specifies I²S configurable modes: PCM modes (short synchronization signal) and normal I²S modes (long synchronization signal) are available. The allowed values are (0-13, 20-23) as described in PCM modes, Normal I²S modes: • See PCM modes, Normal I²S modes for modes available on each connection point and for their settings • See the PCM modes timing diagrams and Normal I²S modes timing diagrams for the signals timing
<I2S_port>	Number	Specifies the I²S physical port (I2S or I2S1) and its connection in the internal audio processing path (I2Sx or I2Sy connection points) when the digital path is selected as audio path (see the AT+USPM command). I²S connections points positions are

Parameter	Type	Description
		showed in the audio paths block diagram in Audio parameters tuning introduction. The allowed values are: • 1: I2S is connected to I2Sx connection point • 2: I2S is connected to I2Sy connection point • 3: I2S1 is connected to I2Sx connection point • 4: I2S1 is connected to I2Sy connection point ☞ I2Sx connection point is parallel to the analog audio front end. In this case the digital audio path is comparable with the analog audio paths (see the AT+USPM command) ☞ I2Sy connection point is nearer to the codec in the audio path. While using this access point the audio path is not affected by some audio controls as digital filters (+UUBF, +UDBF), digital gains (+UMGC, +USGC), sidetone (+USTN); furthermore some audio resources as tone generator (+UTGN), info tones (e.g. free tone, connection tone, low battery alarm), players (ringer on incoming call, alarm and tunes generated by +UPAR command) are not available on the I2Sy connection point ☞ Volume control (+CLVL) and hands-free algorithm (+UHFP) are active for both connection points. ☞ The analog gains in the +USGC and +UMGC commands are unused for both connection points.
<I2S_clk_wa>	Number	Specifies when CLK and WA signals are active. The allowed values are: • 0: dynamic mode. CLK and WA outputs are active and only running when the audio path is active (audio samples are read on RX line and written on TX line). After the audio path is disabled (i.e. a call is hang up), CLK and WA are disabled too • 1: continuous mode. CLK and WA outputs are always active and running if the +USPM current setting implies the <I2S_port> usage, even when the module is idle and the audio path is disabled (no audio data written on TX line, no audio data read on RX line). This implies the module cannot enter power saving mode
<I2S_sample_rate>	Number	I^2S sample rate (frame rate). This is the frequency of the word set and received by the I^2S interface. The words are synchronized by the WA (word alignment) signal. Thus the <I2S_sample_rate> parameter matches with the frequency of WA signal. The allowed values are: • 0: 8 kHz sampling rate • 1: 11.025 kHz sampling rate • 2: 12 kHz sampling rate • 3: 16 kHz sampling rate • 4: 22.05 kHz sampling rate • 5: 24 kHz sampling rate • 6: 32 kHz sampling rate • 7: 44.1 kHz sampling rate • 8: 48 kHz sampling rate • 9: 96 kHz sampling rate • 10: 192 kHz sampling rate
<I2S_Master_Slave>	Number	Indicates the Master/Slave mode of I^2S interface. The allowed values are: • 0: Master mode. CLK, WA, TX are output signals generated by the module. RX is an input signal • 1: Slave mode. Only TX signal is an output signal generated by the module. CLK, WA, RX are input signals and must be generated by the remote device.

22.2.4 Notes

TOBY-L4

- <I2S_mode>=20, 21, 22 and 23 are not supported.
- <I2S_port>=2, 3 and 4 are not supported.
- <I2S_clk_wa>=1 is not supported.
- Table 63 describes the allowed combinations of <I2S_mode> and <I2S_port>

	PCM modes	Normal I^2S modes
I2Sx connection of I2S	(0-1)	(2-13)
I2Sy connection of I2S	Not supported	Not supported

	PCM modes	Normal I²S modes
I2Sx connection of I2S1	Not supported	Not supported
I2Sy connection of I2S1	Not supported	Not supported

Table 63: I²S modes

- If an incorrect number of parameters is provided, if the parameter value is out of range, or if the digital profile is not active, the error result code "+CME ERROR: operation not supported" will be provided if +CMEE is set to 2:
  - Changing the I²S settings during voice activity is not recommended.
- The default values are as follows:
  - I2S: <I2S_mode>=0, <I2S_port>=1, <I2S_clk_wa>=0, <I2S_sample_rate>=0, <I2S_Master_Slave>=0
- The settings for each digital profile are stored in NVM and are part of audio configuration which can be downloaded to target using +UDWNFILE and read from target using +URDFILE.
- The command settings are applied at the module boot, after the command execution and when the profile is changed to digital one with +USPM AT command.

TOBY-L2

- <I2S_mode>=0, 1, 10, 11, 12 and 13 are not supported.
- <I2S_port>=2 and 4 are not supported.
- Table 64 describes the allowed combinations of <I2S_mode> and <I2S_port>

<I2S_port>	PCM modes	Normal I²S modes
I2Sx connection of I2S	(20-23)	(2-9)
I2Sy connection of I2S	Not supported	Not supported
I2Sx connection of I2S1	Not supported	Not supported
I2Sy connection of I2S1	Not supported	Not supported

Table 64: I²S modes

- <I2S_sample_rate>=1, 2, 4, 5, 6, 7, 8, 9 and 10 are not supported (only the 8 and 16 kHz sampling rates are supported). <I2S_sample_rate>=0 is supported only on the audio path 4 (see the <main_uplink> and <main_downlink> parameters in +USPM AT command)
- <I2S_Master_Slave>=1 (slave mode) is not supported.
- If an incorrect number of parameters is provided or the parameter value is out of range, the error result code "+CME ERROR: operation not supported" will be provided if +CMEE is set to 2:
  - Changing the I²S settings during voice activity is not recommended. Reboot the module (+CFUN=16) after having changed I²S settings.
  - The command returns an error result code if I²S pins are already allocated by another resource
- The factory-programmed values are as follows:
  - I2S: <I2S_mode>=21, <I2S_port>=1, <I2S_clk_wa>=0, <I2S_sample_rate>=3, <I2S_Master_Slave>=0

LARA-R2 / TOBY-R2 / SARA-U2

- <I2S_mode>=20, 21, 22 and 23 are not supported.
- <I2S_port>=2, 3 and 4 are not supported.
- <I2S_sample_rate>=9 and 10 are not supported
- Table 65 describes the allowed combinations of <I2S_mode> and <I2S_port>

	PCM modes	Normal I²S modes
I2Sx connection of I2S	(0-1)	(2-13)
I2Sy connection of I2S	Not supported	Not supported
I2Sx connection of I2S1	Not supported	Not supported
I2Sy connection of I2S1	Not supported	Not supported

Table 65: I²S modes

- If an incorrect number of parameters is provided or the parameter value is out of range, the error result code "+CME ERROR: operation not supported" will be provided if +CMEE is set to 2:
  - The command returns an error result code when the audio path is in digital mode. This is because the I²S settings cannot be changed when the audio path is configured to use this interface. It is necessary to disable the digital audio path switching the audio path to NULL path mode (see the

+USPM AT command), configure the I²S interface, and then re-select the digital path (see the +USPM AT command).
  - The command returns an error result code if I²S pins are already allocated by another resource
- The factory-programmed values are as follows:
  - <I2S_mode>=1, <I2S_port>=1, <I2S_clk_wa>=0, <I2S_sample_rate>=3, <I2S_Master_Slave>=0

LISA-U2

- A second digital audio interface (I2S1) is also available.
- <I2S_mode>=20, 21, 22 and 23 are not supported.
- <I2S_port>=2 and 4 are not supported.
- <I2S_sample_rate>=9 and 10 are not supported
- Table 66 describes the allowed combinations of <I2S_mode> and <I2S_port>

<I2S_port>	PCM modes	Normal I²S modes
I2Sx connection of I2S	(0-1)	(2-13)
I2Sy connection of I2S	Not supported	Not supported
I2Sx connection of I2S1	(0-1)	(2-13)
I2Sy connection of I2S1	Not supported	Not supported

Table 66: I²S modes

- If an incorrect number of parameters is provided or the parameter value is out of range, the error result code "+CME ERROR: operation not supported" will be provided if +CMEE is set to 2:
  - The command returns an error result code when the <I2S_port> specified is used by the current audio path (<I2S_port>=3; +USPM: 8,7,0,0). The I²S settings cannot be changed when the audio path is configured to use this interface. It is necessary to change the audio path by the +USPM AT command to a configuration not using the <I2S_port>, configure the <I2S_port> by +UI2S, and then re-select the +USPM mode using the <I2S_port> specified.
  - The command returns an error result code if I²S pins are already allocated by another resource
- The factory-programmed values are as follows:
  - I2S: <I2S_mode>=1, <I2S_port>=1, <I2S_clk_wa>=0, <I2S_sample_rate>=3, <I2S_Master_Slave>=0
  - I2S1: <I2S_mode>=1, <I2S_port>=3, <I2S_clk_wa>=0, <I2S_sample_rate>=3, <I2S_Master_Slave>=0

LISA-U1

- <I2S_mode>=20, 21, 22 and 23 are not supported.
- <I2S_port>=2, 3 and 4 are not supported.
- <I2S_sample_rate>=9 and 10 are not supported
- Table 67 describes the allowed combinations of <I2S_mode> and <I2S_port>

	PCM modes	Normal I²S modes
I2Sx connection of I2S	(0-1)	(2-13)
I2Sy connection of I2S	Not supported	Not supported
I2Sx connection of I2S1	Not supported	Not supported
I2Sy connection of I2S1	Not supported	Not supported

Table 67: I²S modes

- If an incorrect number of parameters is provided or the parameter value is out of range, the error result code "+CME ERROR: operation not supported" will be provided if +CMEE is set to 2:
  - The command returns an error result code when the audio path is in digital mode (+USPM: 2,4,0,0). This is because the I²S settings cannot be changed when the audio path is configured to use this interface. It is necessary to disable the digital audio path switching to analog path (e.g.: by command AT+USPM=0,0,0,0; see the +USPM AT command), configure the I²S interface, and then re-select the digital path by command AT+USPM=2,4,0,0 (see the +USPM AT command).
  - The command returns an error result code if I²S pins are already allocated by another resource
- The factory-programmed values are as follows:
  - <I2S_mode>=0, <I2S_port>=1, <I2S_clk_wa>=0, <I2S_sample_rate>=0, <I2S_Master_Slave>=0

SARA-G340 / SARA-G350

- <I2S_mode>=20, 21, 22 and 23 are not supported.

- The <I2S_sample_rate> and <I2S_Master_Slave> parameters are not supported.
- <I2S_port>=2, 3 and 4 are not supported.
- Table 68 describes the allowed combinations of <I2S_mode> and <I2S_port>

	PCM modes	Normal I^2S modes
I2Sx connection of I2S	(0-1)	(2-13)
I2Sy connection of I2S	Not supported	Not supported
I2Sx connection of I2S1	Not supported	Not supported
I2Sy connection of I2S1	Not supported	Not supported

Table 68: I^2S modes

- <I2S_Master_Slave>=1 (slave mode) is not supported.
- If an incorrect number of parameters is provided or the parameter value is out of range, the error result code "+CME ERROR: operation not supported" will be provided if +CMEE is set to 2:
  - The command returns an error result code when the audio path is in digital mode (+USPM: 2,4,0,0). This is because the I^2S settings cannot be changed when the audio path is configured to use this interface. It is necessary to disable the digital audio path switching to analog path (e.g.: by command AT+USPM=0,0,0,0; see the +USPM AT command), configure the I^2S interface, and then re-select the digital path by command AT+USPM=2,4,0,0 (see the +USPM AT command).
  - The command returns an error result code if I^2S pins are already allocated by another resource
- The factory-programmed values are as follows:
  - <I2S_mode>=1, <I2S_port>=1, <I2S_clk_wa>=0

LEON-G1

- <I2S_mode>=20, 21, 22 and 23 are not supported.
- <I2S_port>=3 and 4 are not supported.
- Table 69 describes the allowed combinations of <I2S_mode> and <I2S_port>

	PCM modes	Normal I^2S modes
I2Sx connection of I2S	(0-1)	Not supported
I2Sy connection of I2S	Not supported	(2-13)
I2Sx connection of I2S1	Not supported	Not supported
I2Sy connection of I2S1	Not supported	Not supported

Table 69: I^2S modes

- The <I2S_sample_rate> and <I2S_Master_Slave> parameters are not supported.
- <I2S_Master_Slave>=1 (slave mode) is not supported.
- If an incorrect number of parameters is provided or the parameter value is out of range, the error result code "+CME ERROR: operation not supported" will be provided if +CMEE is set to 2:
  - The command returns an error result code when the audio path is in digital mode (+USPM: 2,4,0,0). This is because the I^2S settings cannot be changed when the audio path is configured to use this interface. It is necessary to disable the digital audio path switching to analog path (e.g.: by command AT+USPM=0,0,0,0; see the +USPM AT command), configure the I^2S interface, and then re-select the digital path by command AT+USPM=2,4,0,0 (see the +USPM AT command)
  - The command returns an error result code if I^2S pins are already allocated by another resource
- The factory-programmed values are as follows:
  - <I2S_mode>=4, <I2S_port>=2, <I2S_clk_wa>=1

22.2.5 PCM modes (short synchronization signal)

Mode	CLK EDGE for TX	CLK EDGE for RX	WA pulse length	CLK frequency	WA frequency
0	RISING	FALLING	2 clks	18*<I2S_sample_rate>	<I2S_sample_rate>
1	RISING	FALLING	1 clk	17*<I2S_sample_rate>	<I2S_sample_rate>
20	RISING	FALLING	2 clks	32*<I2S_sample_rate>	<I2S_sample_rate>
21	RISING	FALLING	1 clk	32*<I2S_sample_rate>	<I2S_sample_rate>

Mode	CLK EDGE for TX	CLK EDGE for RX	WA pulse length	CLK frequency	WA frequency
22	FALLING	RISING	2 clks	32*<I2S_sample_rate>	<I2S_sample_rate>
23	FALLING	RISING	1 clk	32*<I2S_sample_rate>	<I2S_sample_rate>

22.2.6 PCM modes timing diagrams

WA (PCM mode 0): pulse is 2 bits wide; 18 clocks / WA cycle

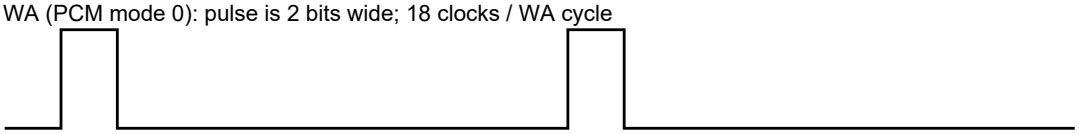

TXD (PCM mode 0): After synchronization bit (0), MSB is transmitted twice and Word is aligned on WA falling edge

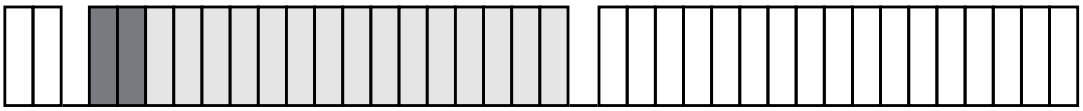

WA (PCM mode 1): pulse is 1 bits wide; 17 clocks / WA cycle

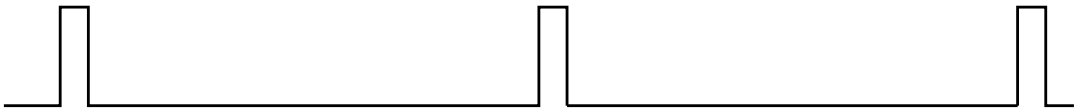

TXD (PCM mode 1): After synchronization bit (0), word is aligned on WA falling edge

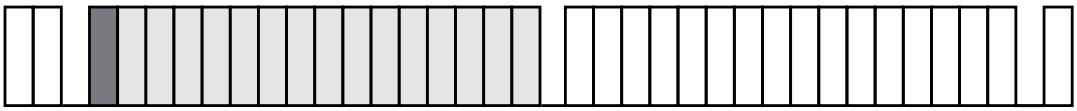

WA (PCM mode 20): pulse is 2 bits wide; 32 clocks / WA cycle

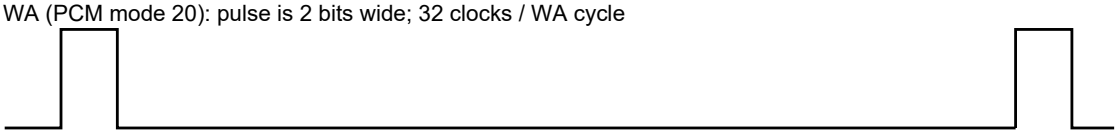

TXD (PCM mode 20): After synchronization bit (0), word is aligned on WA falling edge

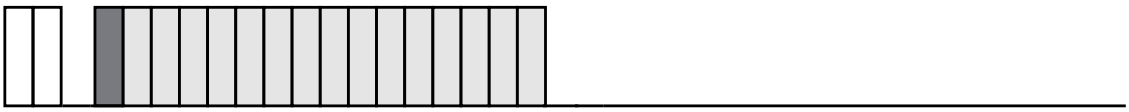

WA (PCM mode 21): pulse is 1 bits wide; 32 clocks / WA cycle

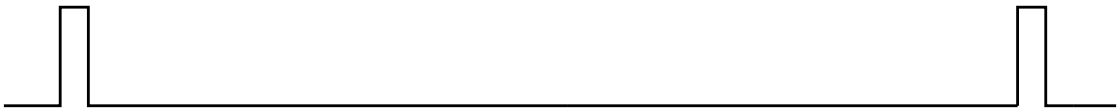

TXD (PCM mode 21): After synchronization bit (0), word is aligned on WA falling edge

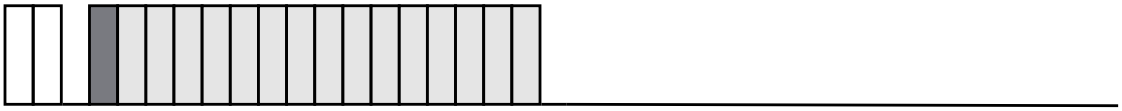

A single transmitted word is marked in grey. MSB is marked darker.

Since RXD bits are read on the falling edge of CLK signal, the RXD word slot starts half bit delayed respect TXD word slot.

Relation between WA and CLK edge for PCM mode is:

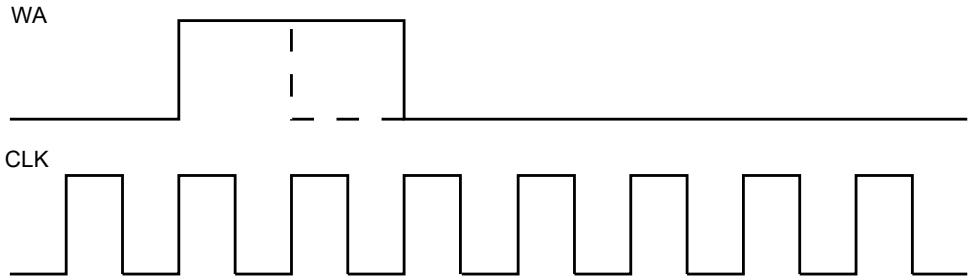

22.2.7 Normal I²S modes (long synchronization signal)

22.2.7.1 TOBY-L4 / LARA-R2 / TOBY-R2 / SARA-U2 / LISA-U2 / LISA-U1 / SARA-G3 / LEON-G1

Mode	CLK edge for TX	CLK edge for RX	MSB delay	TX channel	RX channel	CLK frequency	WA frequency
2	FALLING	RISING	1 bit	WA LOW	WA LOW	32*<I2S_sample_rate>	<I2S_sample_rate>
3	RISING	FALLING	1 bit	WA LOW	WA LOW	32*<I2S_sample_rate>	<I2S_sample_rate>
4	FALLING	RISING	0 bit	WA LOW	WA LOW	32*<I2S_sample_rate>	<I2S_sample_rate>
5	RISING	FALLING	0 bit	WA LOW	WA LOW	32*<I2S_sample_rate>	<I2S_sample_rate>
6	FALLING	RISING	1 bit	WA HIGH	WA HIGH	32*<I2S_sample_rate>	<I2S_sample_rate>
7	RISING	FALLING	1 bit	WA HIGH	WA HIGH	32*<I2S_sample_rate>	<I2S_sample_rate>
8	FALLING	RISING	0 bit	WA HIGH	WA HIGH	32*<I2S_sample_rate>	<I2S_sample_rate>
9	RISING	FALLING	0 bit	WA HIGH	WA HIGH	32*<I2S_sample_rate>	<I2S_sample_rate>
10	FALLING	RISING	1 bit	WA HIGH & LOW	WA HIGH	32*<I2S_sample_rate>	<I2S_sample_rate>
11	RISING	FALLING	1 bit	WA HIGH & LOW	WA HIGH	32*<I2S_sample_rate>	<I2S_sample_rate>
12	FALLING	RISING	0 bit	WA HIGH & LOW	WA HIGH	32*<I2S_sample_rate>	<I2S_sample_rate>
13	RISING	FALLING	0 bit	WA HIGH & LOW	WA HIGH	32*<I2S_sample_rate>	<I2S_sample_rate>

22.2.7.2 TOBY-L2

Mode	CLK edge for TX	CLK edge for RX	MSB delay	TX channel	RX channel	CLK frequency	WA frequency
2	RISING	FALLING	2 bit	WA HIGH	WA HIGH	32*<I2S_sample_rate>	<I2S_sample_rate>
3	RISING	FALLING	2 bit	WA HIGH	WA HIGH	32*<I2S_sample_rate>	<I2S_sample_rate>
4	FALLING	RISING	1 bit	WA HIGH	WA HIGH	32*<I2S_sample_rate>	<I2S_sample_rate>
5	RISING	FALLING	1 bit	WA HIGH	WA HIGH	32*<I2S_sample_rate>	<I2S_sample_rate>
6	RISING	FALLING	2 bit	WA LOW	WA LOW	32*<I2S_sample_rate>	<I2S_sample_rate>
7	RISING	FALLING	2 bit	WA LOW	WA LOW	32*<I2S_sample_rate>	<I2S_sample_rate>
8	FALLING	RISING	1 bit	WA LOW	WA LOW	32*<I2S_sample_rate>	<I2S_sample_rate>
9	RISING	FALLING	1 bit	WA LOW	WA LOW	32*<I2S_sample_rate>	<I2S_sample_rate>

22.2.8 Normal I²S modes timing diagrams

22.2.8.1 TOBY-L4 / LARA-R2 / TOBY-R2 / SARA-U2 / LISA-U2 / LISA-U1 / SARA-G3 / LEON-G1

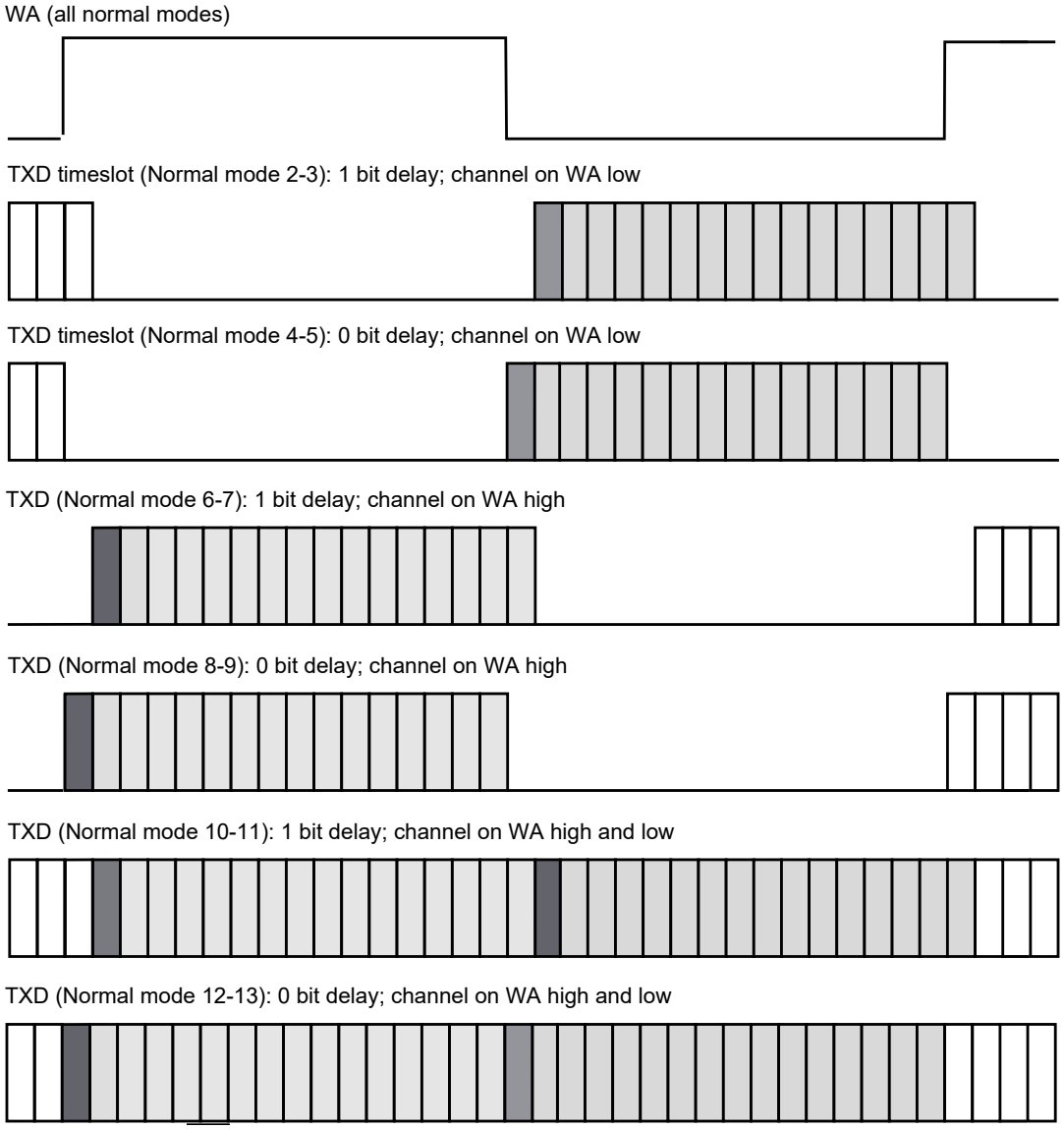

A single transmitted word is marked in grey. MSB is marked darker.

Since RXD bits are read on the opposite edge of CLK signal respect TXD bits, the RXD word slot starts half bit delayed respect TXD word slot.

Relation between WA and CLK edge for Normal I²S depends on mode:

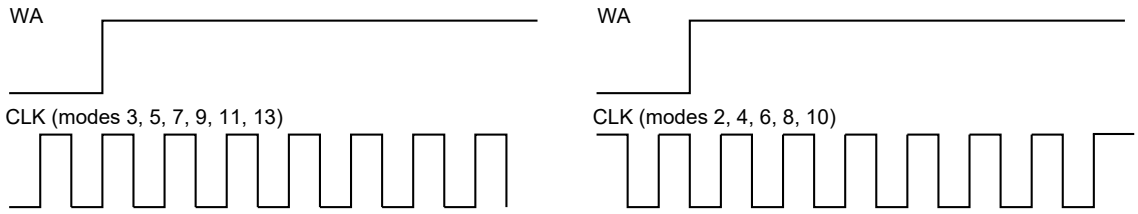

22.2.8.2 TOBY-L2

A single transmitted word is marked in grey. MSB is marked darker.

WA (all normal modes)

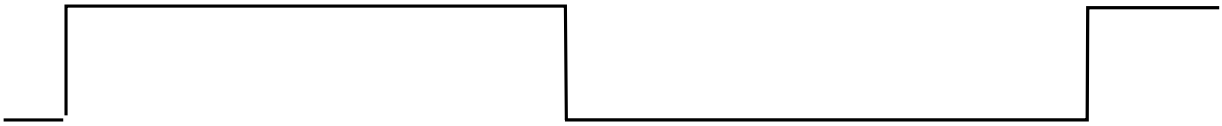

TXD (Normal mode 2-3): 2 bit delay; channel on WA high

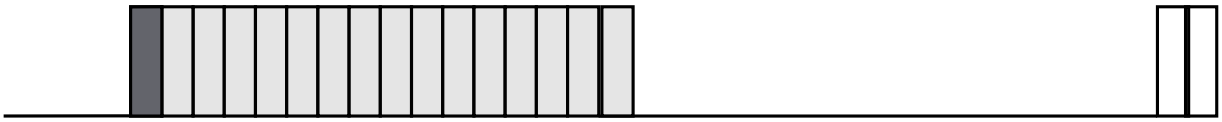

TXD (Normal mode 4-5): 1 bit delay; channel on WA high

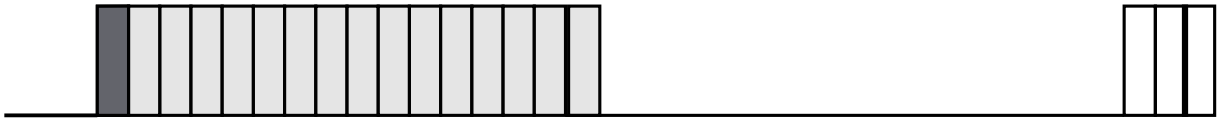

TXD timeslot (Normal mode 6-7): 2bit delay; channel on WA low

TXD timeslot (Normal mode 8-9): 1bit delay; channel on WA low

22.3 Play audio resource +UPAR

+UPAR						
Modules	TOBY-L200-02S TOBY-L200-03A TOBY-L200-03S TOBY-L210-02S TOBY-L210-03A TOBY-L210-03S TOBY-L210-62S TOBY-L220-02S TOBY-L280					
	LARA-R202 LARA-R203 LARA-R211 LARA-R280 TOBY-R2					
	SARA-U2 LISA-U200-01S LISA-U200-02S LISA-U200-03S LISA-U200-52S LISA-U200-62S LISA-U200-83S LISA-U201 LISA-U230 LISA-U260 LISA-U270 LISA-U120 LISA-U130					
	SARA-G340 SARA-G350 SARA-G350-53S LEON-G1					
Attributes	**Syntax**	**PIN required**	**Settings saved**	**Can be aborted**	**Response time**	**Error reference**
	partial	No	No	No	-	+CME Error

22.3.1 Description

Starts the playback of the pre-defined tone of the selected audio resource.

22.3.2 Syntax

Type	Syntax	Response	Example
Set	AT+UPAR=<audio_resource>,<tone_id>,<nof_repeats>	OK	AT+UPAR=0,1,0 OK
Test	AT+UPAR=?	+UPAR: (list of supported <audio_resource>s),(list of supported <tone_id>s),(list of supported <nof_repeats>s) OK	+UPAR: (0-2),(0-66),(0-255) OK

22.3.3 Defined values

Parameter	Type	Description
<audio_resource>	Number	Specifies the audio resource • 0: tone generator • 1: MIDI player • 2: audio loop for test purposes. Use this command to generate an audio loop between the uplink and downlink current path (+USPM) when not in a call. Use the sidetone command (+USTN) for the loop amount configuration. For the uplink to downlink loop on call use sidetone (+USTN) command only
<tone_id>	Number	Specifies the pre-defined tone id to be played; the supported values depend by <audio_resource> values according to the Notes
<nof_repeats>	Number	Specifies the number of repeats • 0: infinite loop • n: n repeats
<error>	Number	The "+CME ERROR: operation not supported" error result code will be provided in these cases (if +CMEE is set to 2): • An incorrect number of parameters is provided • The parameter values are out of range

22.3.4 Notes

- Allowed values for tone generator are:

Id	Tone	Id	Tone	Id	Tone
0	DTMF 0	25	service tone 8	50	melody 4
1	DTMF 1	26	service tone 9	51	melody 5
2	DTMF 2	27	service tone 10	52	melody 6
3	DTMF 3	28	service tone 11	53	melody 7
4	DTMF 4	29	service tone 12	54	melody 8
5	DTMF 5	30	service tone 13	55	melody 9
6	DTMF 6	31	service tone 14	56	melody 10
7	DTMF 7	32	service tone 15	57	melody 11
8	DTMF 8	33	service tone 16	58	melody 12
9	DTMF 9	34	service tone 17	59	melody 13
10	DTMF hash	35	service tone 18	60	melody 14
11	DTMF asterix	36	service tone 19	61	melody 15
12	key tone 1	37	service tone 20	62	melody 16
13	key tone 2	38	service tone 21	63	melody 17
14	key tone 3	39	service tone 22	64	melody 18
15	key tone 4	40	service tone 23	65	service tone 29
16	key tone 5	41	service tone 24	66	service tone 30
17	service tone 0	42	service tone 25	67	Audio tone 300 Hz
18	service tone 1	43	service tone 26	68	Audio tone 500 Hz
19	service tone 2	44	service tone 27	69	Audio tone 1000 Hz
20	service tone 3	45	service tone 28	70	Audio tone 2000 Hz
21	service tone 4	46	melody 0	71	Audio tone 3000 Hz
22	service tone 5	47	melody 1	72	Audio tone 3400 Hz
23	service tone 6	48	melody 2		
24	service tone 7	49	melody 3		

Table 70: Allowed pre-defined tones

- Allowed values for <audio_resource>=1 (MIDI player) are:

Id	Ringing tone	Id	Ringing tone
0	ring	5	ramp spmidi
1	baroque	6	mozart imel
2	caribic	7	whenever
3	jamesbond	8	imperialmarch

Id	Ringing tone	Id	Ringing tone
4	moonstar		

Table 71: Allowed ringing tones

- MIDI Melodies are the same selectable as ringer by +URNG command.
- <tone_id> and <nof_repeats> are unused when <audio_resource>= 2 (audio loop).
- The ringer on an incoming call, the alarm tones (+CALA) and service tones (e.g.: Call Waiting tone) have the priority on the audio player (+UPAR). If they are not muted and must be played, the audio player (+UPAR) is stopped. Incoming call ringer and service tones can be muted by +CALM command (see notes), alarm tones can be muted by <silent> parameter in +CALA command.
- During fast start / stop test sequence a queue overflow might occur, in this case an error result code (+CME ERROR: memory full) is returned.

TOBY-L2

- <audio_resource>=0 (TONE generator) only the DTMF tones are supported.
- <audio_resource>=1 (MIDI player) is not supported.
- <tone_id>=67 .. 72 are not supported.
- Dual streaming (simultaneous playing of tones and audio files) is not supported: the tone generator should not be executed if the audio player is already active (+UPLAYFILE)
- During a speech call the pre-defined tone is not mixed with speech; the speech is muted while the tone is playing.

LARA-R2 / TOBY-R2 / SARA-U2 / LISA-U2 / LISA-U1

- <audio_resource>=1 (MIDI player) is not supported.
- The SMS tones have the priority on audio player (+UPAR). If they must be played, the audio player (+UPAR) is stopped. SMS tones can be muted by +CALM, +UMSM commands.

SARA-U260-00S / SARA-U270-00S / SARA-U270-00X / SARA-U280-00S / LISA-U200-01S / LISA-U200-02S / LISA-U200-52S / LISA-U200-62S / LISA-U230 / LISA-U260 / LISA-U270

- <tone_id>=67 .. 72 are not supported.

LISA-U1

- <audio_resource>=2 (audio loop for test purposes) is not supported.
- <tone_id>=67 .. 72 are not supported.

SARA-G3 / LEON-G1

- The audio player (+UPAR) has the priority on SMS tones. If a player is active, SMS tones are not played.

SARA-G340-00S / SARA-G340-01S / SARA-G350-00S / SARA-G350-00X / SARA-G350-01B / SARA-G350-01S

- <tone_id>=67 .. 72 are not supported.

LEON-G1

- <audio_resource>=2 (audio loop for test purposes) is not supported.
- <tone_id>=67 .. 72 are not supported.

22.4 Stop audio resource +USAR

+USAR						
Modules	TOBY-L200-02S TOBY-L200-03A TOBY-L200-03S TOBY-L210-02S TOBY-L210-03A TOBY-L210-03S TOBY-L210-62S TOBY-L220-02S TOBY-L280					
	LARA-R202 LARA-R203 LARA-R211 LARA-R280 TOBY-R2					
	SARA-U2 LISA-U200-01S LISA-U200-02S LISA-U200-03S LISA-U200-52S LISA-U200-62S LISA-U200-83S LISA-U201 LISA-U230 LISA-U260 LISA-U270 LISA-U120 LISA-U130					
	SARA-G340 SARA-G350 SARA-G350-53S LEON-G1					
Attributes	**Syntax**	**PIN required**	**Settings saved**	**Can be aborted**	**Response time**	**Error reference**
	partial	No	No	No	-	+CME Error

22.4.1 Description

Stops the playback of the selected audio resource.

22.4.2 Syntax

Type	Syntax	Response	Example
Set	AT+USAR=<audio_resource>	OK	AT+USAR=0 OK
Test	AT+USAR=?	+USAR: (list of supported <audio_resource>s) OK	+USAR: (0-2) OK

22.4.3 Defined values

Parameter	Type	Description
<audio_resource>	Number	Specifies the audio resource • 0: DSP tone generator • 1: MIDI player • 2: audio loop for test purposes. Use this command to stop an audio loop between uplink and downlink current path (+USPM).
<error>	Number	The "+CME ERROR: operation not supported" error result code will be provided in these cases (if +CMEE is set to 2): • An incorrect number of parameters is provided • The parameter values are out of range

22.4.4 Notes

- During fast start / stop test sequence a queue overflow might occur, in this case an error result code (+CME ERROR: memory full) is returned.

TOBY-L2

- <audio_resource>=1 (MIDI player) is not supported.
- The command AT+USAR=0 stops the tone generated by the +UPAR or +UTGN AT commands.

LARA-R2 / TOBY-R2 / SARA-U2 / LISA-U2 / LISA-U1

- <audio_resource>=1 (MIDI player) is not supported.

LISA-U1

- <audio_resource>=2 (audio loop for test purposes) is not supported.

SARA-G3

- The command AT+USAR=0 stops the tone generated by the +UPAR or +UTGN AT commands.

LEON-G1

- <audio_resource>=2 (audio loop for test purposes) is not supported.
- The command AT+USAR=0 stops the tone generated by the +UPAR or +UTGN AT commands.

22.5 Play audio file +UPLAYFILE

+UPLAYFILE						
Modules	TOBY-L200-02S TOBY-L200-03A TOBY-L200-03S TOBY-L210-02S TOBY-L210-03A TOBY-L210-03S TOBY-L210-62S TOBY-L220-02S TOBY-L280					
	LARA-R202 LARA-R203 LARA-R211 LARA-R280 TOBY-R2					
	SARA-U2 LISA-U200-01S LISA-U200-02S LISA-U200-03S LISA-U200-52S LISA-U200-62S LISA-U200-83S LISA-U201 LISA-U230 LISA-U260 LISA-U270 LISA-U120 LISA-U130					
	SARA-G340 SARA-G350 SARA-G350-53S LEON-G1					
Attributes	**Syntax**	**PIN required**	**Settings saved**	**Can be aborted**	**Response time**	**Error reference**
	partial	No	No	No	-	+CME Error

22.5.1 Description

Play the specified audio file stored in the file system. The audio signal from the player can be routed to uplink and downlink path. For more details about file system description see the File System Introduction.

Player supports playing of 8 or 16kHz files. See <filename> parameter.

Player supports configuration as ringer and answering machine. See <user_conf> parameter.

After having issued the command and played the requested file, one of these URCs is provided:

- +UPLAYFILE: the player reaches the end of the file and the player is stopped.
- +UPLAYFILE STOPPED: the player is stopped before reaching the end of the file.

Player can be stopped before the end of file by AT+USTOPFILE command.

22.5.2 Syntax

Type	Syntax	Response	Example
Generic syntax			
Set	AT+UPLAYFILE=<filename>[,<path>[,user_conf]]	OK	AT+UPLAYFILE="pcmfile.16khz",1 OK
Start playing in a loop			
Set	AT+UPLAYFILE=<filename>,<path>,0	OK	AT+UPLAYFILE="pcmfile.16khz",1,0 OK
Start playing a file			
Set	AT+UPLAYFILE=<filename>[,<path>[,1]]	OK	AT+UPLAYFILE="pcmfile.16khz" OK
Configure ringer			
Set	AT+UPLAYFILE=<filename>,<path>,2	OK	AT+UPLAYFILE="pcmfile.16khz",0,2 OK
Disable ringer			
Set	AT+UPLAYFILE="",,2	OK	AT+UPLAYFILE="",,2 OK
Display ringer configuration			
Set	AT+UPLAYFILE=<filename>,<path>,102	+UPLAYFILE: <filename>,<path> OK	AT+UPLAYFILE="",,102 +UPLAYFILE: "pcmfile.16khz",1 OK
Configure answering machine			
Set	AT+UPLAYFILE=<filename>,<path>,3	OK	AT+UPLAYFILE="pcmfile.16khz",1,3 OK
Disable answering machine			
Set	AT+UPLAYFILE="",,3	OK	AT+UPLAYFILE="",,3 OK
Display answering machine configuration			
Set	AT+UPLAYFILE=<filename>,<path>,103	+UPLAYFILE: <filename>,<path> OK	AT+UPLAYFILE="",,103 +UPLAYFILE: "pcmfile.16khz",1 OK
Read	AT+UPLAYFILE?	+UPLAYFILE: <playstatus> OK	+UPLAYFILE: 0 OK
URC		+UPLAYFILE	
URC		+UPLAYFILE STOPPED	

22.5.3 Defined values

Parameter	Type	Description
<filename>	String	Specifies the audio resource file name to be played. For the PCM raw file format, the sampling rate is specified with file extension: • *.16khz: file with 16 kHz sampling rate • any other extension or no extension: file with 8 kHz sampling rate
<path>	Number	Specifies the audio path on which to play the file: • 0 (default value): play on downlink path • 1: play on uplink path
<user_conf>	Number	Specifies play and configuration options:

Parameter	Type	Description
		• 0: Play in a loop • 1 (default value): Play once • 2: Configure ringer. To disable the ringer, parameter <filename> has to be set to "", while parameter <path> is ignored and can be set to any of the allowed values. • 3: Configure answering machine. To disable the answering machine, parameter <filename> has to be set to "", while parameter <path> is ignored and can be set to any of the allowed values. • 102: Display ringer configuration. Parameters <filename> and <path> are ignored and can be set to any of the allowed values . • 103: Display answering machine configuration. Parameters <filename> and <path> are ignored and can be set to any of the allowed values.
<playstatus>	Number	Play status: • 0: no file is playing • 1: the file is playing
<error>	Number	These error result codes will be provided if +CMEE is set to 2: • "+CME ERROR: operation not supported": an incorrect number of parameters is provided or the parameter values are out of range • "+CME ERROR: FILE NOT FOUND": the <filename> file is not present in the file system

22.5.4 Notes

- If the <path> parameter is not supported the audio signal is only routed from the player to the downlink path.

TOBY-L2

- Parameters <path> and <user_conf> are not supported.
- ".16khz" extension in <filename> is ignored.
- The +CRSL command selects the player volume; if +CRSL is set to 0 or +CALM is set to 1, the +UPLAYFILE command returns an error result code (+CME ERROR: operation not supported).
- Modules support the WAV audio format. The storage format of PCM audio files must be: 8/16 kHz sample rate, signed 16 bits, little endian, mono.
- Dual streaming (simultaneous playing of tones and audio files) is not supported: the tone generator should not be executed if the audio player is already active (+UTGN, +UPAR).
- The command provides an error result code ("+CME ERROR: operation not allowed" if +CMEE=2) if the <mode> parameter of +UDTMFD AT command differs from 0.

LARA-R2 / TOBY-R2 / SARA-U201-03A / SARA-U201-03B / SARA-U201-03X / SARA-U201-63B / SARA-U260 / SARA-U270-00S / SARA-U270-00X / SARA-U270-03A / SARA-U270-03S / SARA-U270-53S / SARA-U270-73S / SARA-U280 / LISA-U2

- Parameters <path> and <user_conf> are not supported.
- ".16khz" extension in <filename> is ignored.
- The +CRSL command does not impact the volume of the audio file player. The player volume is affected by <Mix_afe> parameter and <Scal_Rec> (see the +USGC command).
- Modules support the PCM audio file. The storage format of PCM audio files must be: 8 kHz sample rate, signed 16 bits, little endian, mono.

SARA-U201-04A / SARA-U201-04B / SARA-U201-04X / SARA-U270-04B

- Modules support the PCM audio file. The storage format of PCM audio files must be: 8/16 kHz sample rate, signed 16 bits, little endian, mono.

LISA-U1

- Parameters <path> and <user_conf> are not supported.
- ".16khz" extension in <filename> is ignored.
- If +CRSL is set to 0, the audio file player is muted, otherwise +CRSL does not change the volume of the audio file player. The player volume is changed by <Mix_afe> parameter, <Scal_Rec> and <Analog_gain> parameters (see the +USGC command).
- Modules support the PCM audio file. The storage format of PCM audio files must be: 8 kHz sample rate, signed 16 bits, little endian, mono.

SARA-G3

- Parameters <path> and <user_conf> are not supported.
- ".16khz" extension in <filename> is ignored.
- The +CRSL command selects the player volume; if +CRSL is set to 0 or +CALM is set to 1, the +UPLAYFILE command returns an error result code (+CME ERROR: operation not supported). The player volume is also changed by <Scal_Rec> and <Analog_gain> parameters (see the +USGC command).
- Modules support the AMR audio file. The storage format of AMR encoded audio content must be compliant to RFC3267 [54].
- The URC (+UPLAYFILE STOPPED) is not supported.
- The command cannot be used during an eCall activity; in that case an error result code is provided ("+CME ERROR: operation not supported" if +CMEE=2).

LEON-G1

- Parameters <path> and <user_conf> are not supported.
- ".16khz" extension in <filename> is ignored.
- The +CRSL command selects the player volume; if +CRSL is set to 0 or +CALM is set to 1, the +UPLAYFILE command returns an error result code (+CME ERROR: operation not supported). The player volume is also changed by <Scal_Rec> and <Analog_gain> parameters (see the +USGC command).
- Modules support the AMR audio file. The storage format of AMR encoded audio content must be compliant to RFC3267 [54].
- The URC (+UPLAYFILE STOPPED) is not supported.

22.6 Record audio file +URECFILE

+URECFILE						
Modules	SARA-U201-04A SARA-U201-04B SARA-U201-04X SARA-U270-04B					
Attributes	**Syntax**	**PIN required**	**Settings saved**	**Can be aborted**	**Response time**	**Error reference**
	full	No	No	No	Up to 10 s	+CME Error

22.6.1 Description

Records an audio file to the file system. For more details about file system description see the File System Introduction. The audio signal can be recorded on both uplink and downlink path in 8 or 16 kHz.

- On the uplink path, the file is recorded from the microphone.
- On the downlink path, the file is recorded from received speech.

After issuing the command following URCs are provided:

- +URECFILE: <path>,<event>: event occurred on specific path (started, stopped, timer expired).
- +UURECFILEE: <path>,<error_code>: error occurred when recording a file.

The recorder can be stopped during recording using the +USTOPFILE command, specifying parameter <resource> as recorder.

The recorder supports 8 kHz and 16 kHz raw PCM files. See <filename> parameter.

☞ The recorder will overwrite the file if it already exists.

22.6.2 Syntax

Type	Syntax	Response	Example
Set	AT+URECFILE=<filename>,<path>,<duration>	OK	AT+URECFILE="pcmfile.16khz",0,10 OK
Read	AT+URECFILE?	+URECFILE: <state> OK	+URECFILE: 0 OK
URCs			
URC		+UURECFILE: <path>,<event_code>	+UURECFILE: 1,0
URC		+UURECFILEE: <path>,<error_code>	+UURECFILEE: 1,5

22.6.3 Defined values

Parameter	Type	Description
<filename>	String	File name for recording PCM raw 16 bit file on file system. The sampling rate is specified with file extension: • *.16khz: file with 16 kHz sampling rate • Any other extension or no extension: file with 8 kHz sampling rate
<path>	Number	Specifies the audio path on which to record the file: • 0: record on the downlink path • 1: record on the uplink path • 2: record uplink and downlink path
<duration>	Number	Duration of recording in seconds: • 0: infinite recording (has to be stopped manually with +USTOPFILE command) • 1-65536: allowed number of seconds
<state>	Number	Recorder state returned on read request: • 0: recorder idle • 1: recorder active
<event_code>	Number	Unsolicited event codes returned by +UURECFILE when specific events happen: • 0: recording started • 1: recording stopped • 2: recording paused (Not applicable to this command) • 3: recording timer expired
<error>	Number	This error result code will be provided if +CMEE is set to 2: • "+CME ERROR: Operation not allowed": <op_code> was not valid for the current state of the recorder
<error_code>	Number	An error has occurred during recording: • 0: resource is not available (file <filename> could not be opened for writing) • 1: device is not available (device driver is busy) • 2: unexpected internal message received by recorder state machine • 3: internal error has occurred, recovery will be attempted • 4: audio frames were missed in the last second of recording (cause could be lack of empty space). Error will appear after each second of recording where missing frames were detected. • 5: file system out of space • 6: file system error

22.6.4 Notes

SARA-U2

- The module supports raw PCM audio format. The storage format of PCM audio files is: 8/16 kHz sample rate, signed 16 bits, little endian, mono.
- Recording and playing in parallel is supported.
- Recording can consume a lot of space on file system. If the recorder runs out of space it will generate an error and stop.

SARA-U270

- The recorded file is created up-front. If there is not enough space in the file system the operation will return the +UURECFILEE URC (0 - resource is not available).
- If the recording is manually stopped, the recording will be silent from that point forward (the file will keep full size).
- Trying to record over existing file will return the +UURECFILEE URC (0 - resource is not available).

22.7 Stop audio file +USTOPFILE

+USTOPFILE						
Modules	TOBY-L200-02S TOBY-L200-03A TOBY-L200-03S TOBY-L210-02S TOBY-L210-03A TOBY-L210-03S TOBY-L210-62S TOBY-L220-02S TOBY-L280					
	LARA-R202 LARA-R203 LARA-R211 LARA-R280 TOBY-R2					
	SARA-U2 LISA-U200-01S LISA-U200-02S LISA-U200-03S LISA-U200-52S LISA-U200-62S LISA-U200-83S LISA-U201 LISA-U230 LISA-U260 LISA-U270 LISA-U120 LISA-U130					
	SARA-G340 SARA-G350 SARA-G350-53S LEON-G1					
Attributes	**Syntax**	**PIN required**	**Settings saved**	**Can be aborted**	**Response time**	**Error reference**
	full	No	No	No	-	+CME Error

22.7.1 Description

Stop the audio file reproduction.

A URC is provided after the AT+USTOPFILE command correctly stopped the file.

22.7.2 Syntax

Type	Syntax	Response	Example
Action	AT+USTOPFILE[=<resource>]	OK	AT+USTOPFILE OK
URC		+UPLAYFILE STOPPED	
URC		+UURECFILE: <path>,1	

22.7.3 Defined values

Parameter	Type	Description
<resource>	Number	Specifies the audio resource to stop: • 0 (default value): audio player (see +UPLAYFILE) • 1: audio recorder (see +URECFILE)
<path>	Number	Specifies the audio path on which the recording was stopped: • 0: stopped recording on the downlink path • 1: stopped recording on the uplink path

22.7.4 Notes

TOBY-L2 / LARA-R2 / TOBY-R2 / SARA-U201-03A / SARA-U201-03B / SARA-U201-03X / SARA-U201-63B / SARA-U260 / SARA-U270 / SARA-U280 / LISA-U2 / LISA-U1 / SARA-G3 / LEON-G1

- Parameter <resource> is not supported.

SARA-G340 / SARA-G350 / LEON-G1

- The URC is not available.

22.8 Play audio file +UAPLAY

+UAPLAY						
Modules	SARA-U201-04A SARA-U201-04B SARA-U201-04X SARA-U270-04B					
Attributes	**Syntax**	**PIN required**	**Settings saved**	**Can be aborted**	**Response time**	**Error reference**
	full	No	No	No	-	+CME Error

22.8.1 Description

Plays an audio file from the file system. For more details about file system description see the File System Introduction. The audio signal from the player can be played on both uplink and downlink paths with possibility to mix with speech and other sources using <mix> parameter.

On the uplink path, the played file is not affected by speech enhancement and is injected just before Radio transmission. Played file does not feedback through side tone.

On the downlink path, the played file is injected just after Radio receive.

After issuing the command, the following URCs are provided:

- +UUAPLAY: <path>,<event>: an event (started, stopped, paused) occurred on specific path
- +UUAPLAYE: <path>,<error_code>: an error occurred while playing a file.

The player can be stopped and paused during play using the <op_code> parameter.

Player supports 8 kHz and 16 kHz raw PCM files. See <filename> parameter.

22.8.2 Syntax

Type	Syntax	Response	Example
Generic syntax			
Set	AT+UAPLAY=<path>,<op_code>[,<filename>[,<mix>]]	OK	AT+UAPLAY=0,0 OK
Start playing			
Set	AT+UAPLAY=<path>,0,<filename>[,<mix>]	OK	AT+UAPLAY=0,0,"pcmfile.16khz" OK +UUAPLAY: 0,0 (playing) +UUAPLAY: 0,1
Stop playing			
Set	AT+UAPLAY=<path>,1	OK	AT+UAPLAY=1,1 OK +UUAPLAY: 1,1
Pause playing			
Set	AT+UAPLAY=<path>,2	OK	AT+UAPLAY=0,2 OK +UUAPLAY: 0,2
Read			
Read	AT+UAPLAY=<path>	+UAPLAY: <path>,<state> OK	AT+UAPLAY=1 +UAPLAY: 1,0 OK
URCs			
URC		+UUAPLAY: <path>,<event_code>	+UUAPLAY: 1,0
URC		+UUAPLAYE: <path>,<error_code>	+UUAPLAYE: 1,2

22.8.3 Defined values

Parameter	Type	Description
<path>	Number	Specifies the audio path on which to play the file: • 0: play on the downlink path • 1: play on the uplink path
<op_code>	Number	Play operation: • 0: start/resume playing • 1: stop playing • 2: pause playing
<filename>	String	File name of PCM raw 16 bit file on file system. The sampling rate is specified with file extension: • *.16khz: file with 16 kHz sampling rate • any other extension or no extension: file with 8 kHz sampling rate
<mix>	Number	Mixing of audio: • 0 (default value): all other sources muted • 1: played file mixed with other sources
<state>	Number	Player state returned on read request: • 0: player idle • 1: player active

Parameter	Type	Description
		• 2: player paused
<event_code>	Number	Unsolicited event codes returned by +UUAPLAY when specific events happen: • 0: playing started • 1: playing stopped • 2: playing paused
<error>	Number	These error result codes will be provided if +CMEE is set to 2: • "+CME ERROR: FFS file not found": the <filename> file is not present in the file system • "+CME ERROR: Operation not allowed": <op_code> was not valid for the current state of the player
<error_code>	Number	An error has occurred during playing: • 0: resource is not available (file <filename> could not be opened for reading) • 1: device is not available (device driver is busy) • 2: unexpected internal message received by player state machine • 3: internal error has occurred, recovery will be attempted • 4: audio frames were missed in the last second of playing (cause could be lack of empty space). Error will appear after each second of playing where missing frames were detected.

22.8.4 Notes

SARA-U2

- Module supports raw PCM audio format. The storage format of PCM audio files must be: 8/16 kHz sample rate, signed 16 bits, little endian, mono.
- Dual streaming (simultaneous playing of tones and audio files) is supported (+UTGN, +UPAR). Playing in parallel with +UPLAYFILE is supported.
- Playing of 16 kHz PCM audio file on Narrow-band call or 8 kHz PCM audio file on Wide-band call will result in distorted audio.
- Using player in eCall is not possible.

22.9 Record audio file +UAREC

+UAREC						
Modules	SARA-U201-04A SARA-U201-04B SARA-U201-04X SARA-U270-04B					
Attributes	**Syntax**	**PIN required**	**Settings saved**	**Can be aborted**	**Response time**	**Error reference**
	partial	No	No	No	-	+CME Error

22.9.1 Description

Records an audio file to the file system. For more details about file system description see the File System Introduction. The audio signal can be recorded on both uplink and downlink paths.

- On the uplink path, the file is recorded just before Radio transmission.
- On the downlink path, the file is recorded just after Radio receive.

After issuing the command following URCs are provided:

- +UUAREC: <path>,<event>: event occurred on specific path (started, stopped, paused, timer expired).
- +UUARECE: <path>,<error_code>: error occurred when recording a file.

The recorder can be stopped and paused during recording using the <op_code> parameter.

The recorder supports 8 kHz and 16 kHz raw PCM files. See <filename> parameter.

The user has an option of timed recording by means of the <duration> parameter.

There is an option of call triggered recording. See <trigger> parameter.

☞ The recorder will overwrite the file if it already exists.

22.9.2 Syntax

Type	Syntax	Response	Example
Generic syntax			
Set	AT+UAREC=<path>,<op_code>[,<filename>,<duration>[,<trigger>]]	OK	AT+UAREC=0,1 OK
Start recording			
Set	AT+UAREC=<path>,0,<filename>,<duration>[,<trigger>]	OK	AT+UAREC=0,0,"pcmfile.16khz",10 OK +UUAREC: 0,0 (10 seconds elapsed) +UUAREC: 0,3
			AT+UAREC=0,0,"pcmfile.16khz",0,1 OK RING ATA +UUAREC: 0,0 (record untill manual stop, call disconnect or file system full) +UUARECE: 0,4 +UUAREC: 0,2
Stop recording			
Set	AT+UAREC=<path>,1	OK	AT+UAREC=0,1 OK +UUAREC: 0,1
Pause recording			
Set	AT+UAREC=<path>,2	OK	AT+UAREC=0,2 OK +UUAREC: 0,2
Read	AT+UAREC=<path>	+UAREC: <path>,<state> OK	AT+UAREC=1 +UAREC: 1,3 OK
URCs			
URC		+UUAREC: <path>,<event_code>	+UUAREC: 1,0
URC		+UUARECE: <path>,<error_code>	+UUARECE: 1,2

22.9.3 Defined values

Parameter	Type	Description
<path>	Number	Specifies the audio path on which to record the file: • 0: record on the downlink path • 1: record on the uplink path
<op_code>	Number	Record operation: • 0: start/resume recording • 1: stop recording • 2: pause recording
<filename>	String	File name for recording PCM raw 16 bit file on file system. The sampling rate is specified with file extension: • *.16khz: file with 16 kHz sampling rate • any other extension or no extension: file with 8kHz sampling rate
<duration>	Number	Timed recording: • 0: recording is not time limited • 1-65536: recorder will record for the number of seconds specified or until a stop is received

Parameter	Type	Description
<trigger>	Number	Trigger for starting/stopping recording on a audio call connect or disconnect: • 0 (default value): call trigger is disabled. Recording will start immediately • 1: call trigger is enabled. Recording will start when audio call is connected and stop when audio call is disconnected (or stop command received)
<state>	Number	Recorder state returned on read request: • 0: recorder idle • 1: recorder active • 2: recorder paused • 3: recorder waiting for call connected trigger • 4: recorder waiting for call disconnected trigger
<event_code>	Number	Unsolicited event codes returned by +UUAREC when specific events happen: • 0: recording started • 1: recording stopped • 2: recording paused • 3: recording timer expired
<error>	Number	This error result code will be provided if +CMEE is set to 2: • "+CME ERROR: Operation not allowed": <op_code> was not valid for the current state of the recorder
<error_code>	Number	An error has occurred during recording: • 0: resource is not available (file <filename> could not be opened for writing) • 1: device is not available (device driver is busy) • 2: unexpected internal message received by recorder state machine • 3: internal error has occurred, recovery will be attempted • 4: audio frames were missed in the last second of recording (cause could be lack of empty space). Error will appear after each second of recording where missing frames were detected. • 5: file system out of space • 6: file system error

22.9.4 Notes

SARA-U2

- The module supports raw PCM audio format. The storage format of PCM audio files must be: 8/16 kHz sample rate, signed 16 bits, little endian, mono.
- Recording and playing in parallel is supported.
- Recording of 16 kHz PCM audio file on a Narrow-band call or 8 kHz PCM audio file on a Wide-band call will result in distorted audio recording.
- Recording can consume a lot of space on file system. If the recorder runs out of space it will generate an error and stop.
- Using trigged recording in combination with the duration will result in timed recording where timer starts on trigger (call connect). Recording will stop after <duration> seconds. If the recording is paused in between, the timer will continue for remained amount of time after resume.
- Using DTMF detection and recorder at the same time is not possible.
- Using recorder in eCall is not possible.

SARA-U270

- <op_code>=2 is not supported.
- <duration>=0 is not supported.
- The recorded file is created up-front. If there is not enough space in the file system the operation will return the +UUARECE URC (0 - resource is not available).
- If recording is manually stopped, the recording will be silent from that point forward (the file will keep full size).
- Trying to record over existing file will return the +UUARECE URC (0 - resource is not available).

22.10 Tone generator +UTGN

+UTGN						
Modules	TOBY-L200-02S TOBY-L200-03A TOBY-L200-03S TOBY-L210-02S TOBY-L210-03A TOBY-L210-03S TOBY-L210-62S TOBY-L220-02S TOBY-L280					
	LARA-R202 LARA-R203 LARA-R211 LARA-R280 TOBY-R2					
	SARA-U2 LISA-U200-01S LISA-U200-02S LISA-U200-03S LISA-U200-52S LISA-U200-62S LISA-U200-83S LISA-U201 LISA-U230 LISA-U260 LISA-U270 LISA-U120 LISA-U130					
	SARA-G340 SARA-G350 SARA-G350-53S LEON-G1					
Attributes	**Syntax**	**PIN required**	**Settings saved**	**Can be aborted**	**Response time**	**Error reference**
	full	No	No	No	-	+CME Error

22.10.1 Description

Starts a tone on the module tone generator. The frequency, duration and volume of the tone must be set.

22.10.2 Syntax

Type	Syntax	Response	Example
Set	AT+UTGN=<freq>,<duration>,<volume>[,<UplinkSending>]	OK	AT+UTGN=1000,1000,100,1 OK
Test	AT+UTGN=?	+UTGN: (list of supported <freq>s),(list of supported <duration>s),(list of supported <volume>s)[,(list of supported <UplinkSending>s)] OK	+UTGN: (300-3400),(50-1360),(1-100),(0-2) OK

22.10.3 Defined values

Parameter	Type	Description
<freq>	Number	Frequency of the sinus waveform in Hz for the tone generator: • TOBY-L2 - The range goes from 50 to 7000 • LARA-R2 / TOBY-R2 / SARA-U2 / LISA-U2 / LISA-U1 / SARA-G3 / LEON-G1 - The range goes from 300 to 3400
<duration>	Number	Duration of the tone in milliseconds: • TOBY-L2 - The range of permitted values is from 20 to 8000 in steps of multiples of 20. If the parameter is set to a value that is not a multiple of 20, it will be rounded down to the nearest multiple-of-20 value. E.g., if the user sets the parameter to 115, the generated tone duration will be 100 ms. • LARA-R2 / TOBY-R2 / SARA-U2 / LISA-U2 - The range goes from 50 to 1360 • LISA-U1 - The range goes from 10 to 1360 • SARA-G3 / LEON-G1 - The range goes from 10 to 8000
<volume>	Number	Volume for the tone generator: • TOBY-L2 - The range goes from 1 to 37, where 1 means -36 dB, 37 means 0 dB. Increasing step is 1 dB (e.g.: 30 means -7 dB) • LARA-R2 / TOBY-R2 / SARA-U2 / LISA-U2 / LISA-U1 / SARA-G3 / LEON-G1 - The range goes from 1 to 100; volume 1 means muted. Increasing step is 0.25 dB
<UplinkSending>	Number	Enables/disables the connection of the tone generator to uplink and/or downlink path: • 0 (default value): the tone is sent only on downlink path • 1: the tone is sent only on uplink path • 2: the tone is sent both on downlink and uplink path
<error>	Number	The "+CME ERROR: operation not supported" error result code will be provided in these cases (if +CMEE is set to 2): • An incorrect number of parameters is provided • The parameter values are out of range

22.10.4 Notes

- The tone playing can be stopped by means of the set command: AT+UTGN=0,0,0. If no tone is playing an error result code (+CME ERROR: operation not supported) is returned.

- If the "silent mode" is enabled (+CALM=1) the +UTGN command returns an error result code (+CME ERROR: operation not supported).
- The ringer on an incoming call, the alarm tones (+CALA) and service tones (e.g.: Call Waiting tone) have the priority on the tone generator (+UTGN). If they are not muted and must be played, the tone generator (+UTGN) is stopped. An incoming call ringer and service tones can be muted by +CALM command (see notes), alarm tones can be muted by <silent> parameter in +CALA command.
- During fast start / stop test sequence a queue overflow might occur, in this case an error result code (+CME ERROR: memory full) is returned.

TOBY-L2

- The command AT+UTGN=0,0,0 stops the tone generated by the +UPAR or +UTGN AT commands.
- Dual streaming (simultaneous playing of tones and audio files) is not supported: the tone generator should not be executed if the audio player is already active (+UPLAYFILE)
- During a speech call the pre-defined tone is not mixed with speech; the speech is muted while the tone is playing.

LARA-R2 / TOBY-R2 / SARA-U2 / LISA-U2 / LISA-U1

- The SMS tones have the priority on the tone generator (+UTGN). If they must be played, the tone generator (+UTGN) is stopped. SMS tones can be muted by +CALM, +UMSM commands.

SARA-G3 / LEON-G1

- The tone generator (+UTGN) has the priority on SMS tones. If tone generator is active, SMS tones are not played.
- The command AT+UTGN=0,0,0 stops the tone generated by the +UPAR or +UTGN AT commands.

22.11 Ringing tone selection +URNG

+URNG						
Modules	LARA-R202 LARA-R203 LARA-R211 LARA-R280 TOBY-R2					
	SARA-U2 LISA-U200-01S LISA-U200-02S LISA-U200-03S LISA-U200-52S LISA-U200-62S LISA-U200-83S LISA-U201 LISA-U230 LISA-U260 LISA-U270 LISA-U120 LISA-U130					
	SARA-G340 SARA-G350 SARA-G350-53S LEON-G1					
Attributes	**Syntax**	**PIN required**	**Settings saved**	**Can be aborted**	**Response time**	**Error reference**
	full	No	NVM	No	-	+CME Error

22.11.1 Description

Allows the user to select one out of a set of predefined ringers.

22.11.2 Syntax

Type	Syntax	Response	Example
Set	AT+URNG=<rng_id>	OK	AT+URNG=5 OK
Read	AT+URNG?	+URNG: <rng_id> OK	+URNG: 0 OK
Test	AT+URNG=?	+URNG: (list of supported <rng_id>s) OK	+URNG: (0-18) OK

22.11.3 Defined values

Parameter	Type	Description
<rng_id>	Number	Ringer identifier currently selected; the factory-programmed value is 0
<rng_name_x>	Number	Name of the ringer saved in the module
<error>	Number	If an incorrect number of parameters is provided or the parameter value is out of range the error result code "+CME ERROR: operation not supported" will be provided

22.11.4 Notes

SARA-G340 / SARA-G350 / LEON-G1

- The test command is:
  +URNG:

  0 - <rng_name_1>

  1 - <rng_name_2>

  ...

  rng_max_num - <rng_name_n>

  OK
- If <rng_id> value is not allowed the error result code "+CME ERROR: Wrong ringer identifier" will be provided.

22.12 SMS alert sound mode (Message Sound Muting) +UMSM

+UMSM						
Modules	TOBY-L200-02S TOBY-L200-03A TOBY-L200-03S TOBY-L210-02S TOBY-L210-03A TOBY-L210-03S TOBY-L210-62S TOBY-L220-02S TOBY-L280					
	LARA-R202 LARA-R203 LARA-R211 LARA-R280 TOBY-R2					
	SARA-U2 LISA-U200-01S LISA-U200-02S LISA-U200-03S LISA-U200-52S LISA-U200-62S LISA-U200-83S LISA-U201 LISA-U230 LISA-U260 LISA-U270 LISA-U120 LISA-U130					
	SARA-G340 SARA-G350 SARA-G350-53S LEON-G1					
Attributes	**Syntax**	**PIN required**	**Settings saved**	**Can be aborted**	**Response time**	**Error reference**
	full	No	No	No	-	+CME Error

22.12.1 Description

Mutes the signalling sound of SMS on the MT.

22.12.2 Syntax

Type	Syntax	Response	Example
Set	AT+UMSM=<mode>	OK	AT+UMSM=0 OK
Read	AT+UMSM?	+UMSM: <mode> OK	+UMSM: 0 OK
Test	AT+UMSM=?	+UMSM: (list of supported <mode>s) OK	+UMSM: (0-1) OK

22.12.3 Defined values

Parameter	Type	Description
<mode>	Number	• 0 (default value): normal mode (the signalling sound of SMS on the MT is not muted) • 1: silent mode (the signalling sound of SMS on the MT is muted)
<error>	Number	If an incorrect number of parameters is provided or the parameter value is out of range the error result code "+CME ERROR: operation not supported" will be provided if +CMEE is set to 2.

22.13 Master clock control +UMCLK

+UMCLK						
Modules	TOBY-L200-02S TOBY-L200-03A TOBY-L200-03S TOBY-L210-02S TOBY-L210-03A TOBY-L210-03S TOBY-L210-62S TOBY-L220-02S TOBY-L280					
	LARA-R2 TOBY-R2					
	SARA-U2 LISA-U2					
Attributes	**Syntax**	**PIN required**	**Settings saved**	**Can be aborted**	**Response time**	**Error reference**
	full	No	NVM	No	-	+CME Error

22.13.1 Description

Enables or disables the master clock output signal. This is mainly designed to feed the master clock input of an external audio codec. For more details see the corresponding module system integration manual.

The available output pin configurations are:

- Disabled, set as tristate
- Pin output low
- Generate 13 MHz clock
- Generate 26 MHz clock

Depending on the <enabling_mode> parameter value, the configuration can be applied as soon as the command is issued, or as soon as there is an audio activity (i.e. a digital audio interface is enabled).

22.13.2 Syntax

Type	Syntax	Response	Example
Set	AT+UMCLK=[<mclk_mode>[,<enabling_mode>]]	OK	AT+UMCLK=1,1 OK
Read	AT+UMCLK?	+UMCLK: <mclk_mode>,<enabling_mode> OK	+UMCLK: 1,1 OK
Test	AT+UMCLK=?	+UMCLK: (list of supported <mclk_mode>s),(list of supported <enabling_mode>s) OK	+UMCLK: (0-3),(0-1) OK

22.13.3 Defined values

Parameter	Type	Description
<mclk_mode>	Number	CODEC_CLK pin setting: • 0 (default and factory-programmed value): disabled pin; 3-state with pull down resistor • 1: pin output steady low • 2: codec master clock at 13 MHz • 3: codec master clock at 26 MHz
<enabling_mode>	Number	Specifies when the <mclk_mode> is enabled on CODEC_CLK pin • 0 (default and factory-programmed value): "Audio dependent" mode <mclk_mode> is applied to the CODEC_CLK pin only when the audio path is active (audio samples are read on the I2S_RX line and written on the I2S_TX line). When the audio path is disabled (i.e. at call end), then the CODEC_CLK pin is disabled too (3-state with pull-down resistor) • 1: "Continuous" mode <mclk_mode> is applied to the CODEC_CLK pin as soon as the AT command is issued, even when the module is in idle and the audio path is disabled (no audio data written on I2S_TX line, no audio data read on I2S_RX line) When <mclk_mode>=0 (pin disabled) and <enabling_mode>=0 ("Audio dependent" mode), the CODEC_CLK pin is disabled both when audio path is enabled or disabled. In this case "Audio dependent" mode matches with "Continuous" mode (the command AT+UMCLK=0,0 and AT+UMCLK=0,1 are equivalent).

22.13.4 Notes

- If <mclk_mode>= 1 ("Continuous" mode) the actual clock generation occurs within 10 ms of the command issuing.
- When the power saving is enabled (i.e. AT+UPSV=1) and the module is in the power saving state, the master clock is disabled even if it is set to "Continuous" mode (+UMCLK=<mclk_mode>,1).
- The command setting is stored in the NVM, but it can be recovered by means of AT+UMCLK= (with no parameters).
- If the external audio codec (Maxim MAX9860) is enabled by +UEXTDCONF: 0,1 (i.e.: <device_id>=0 and <configuration_enable>=1) this forces the setting codec master clock at 13 MHz, in "Audio dependent" mode (i.e. +UMCLK=2,0) at boot time. Thus current setting of +UMCLK in NVM will be overwritten at the module boot time. In this case, disable the master clock at 13 MHz, the AT+UMCLK=0 command must be explicitly issued after every startup.

TOBY-L2

- The GPIO6 pin provides the master clock output signal if configured as "Master clock output" by AT +UGPIOC command.

LARA-R2 / TOBY-R2 / SARA-U2 / LISA-U2

- The CODEC_CLK pin provides the master clock output signal.

22.14 External device configuration +UEXTDCONF

+UEXTDCONF						
Modules	TOBY-L200-02S TOBY-L200-03A TOBY-L200-03S TOBY-L210-02S TOBY-L210-03A TOBY-L210-03S TOBY-L210-62S TOBY-L220-02S TOBY-L280					
	LARA-R202 LARA-R203 LARA-R211 LARA-R280 TOBY-R2					
	SARA-U2 LISA-U200-01S LISA-U200-02S LISA-U200-03S LISA-U200-52S LISA-U200-62S LISA-U200-83S LISA-U201 LISA-U230 LISA-U260 LISA-U270					
Attributes	**Syntax**	**PIN required**	**Settings saved**	**Can be aborted**	**Response time**	**Error reference**
	full	No	NVM	No	-	+CME Error

22.14.1 Description

☞ LISA-U200-01S / LISA-U200-02S / LISA-U200-52S / LISA-U200-62S / LISA-U230 / LISA-U260 / LISA-U270
To be used if and only if the I^2C lines are biased high by external pull-ups providing proper circuit connection to an external audio codec.

Configures an external device, e.g. an audio codec, at the boot time. The setting (on / off) and the configuration string for each supported device is stored in NVM and applied at each module power-on.

The information text response to the read command lists all the configured devices in separated lines.

The only supported external device is the Maxim MAX9860 audio codec. See Maxim datasheet [69].

22.14.2 Syntax

Type	Syntax	Response	Example
Set	AT+UEXTDCONF=<device_id>[,<configuration_enable>[,<hex_data>]]	OK	AT+UEXTDCONF=0,1,"00000000101E3F04000006330025000000 8A" OK
Read	AT+UEXTDCONF?	+UEXTDCONF: <device_0>,<configuration_enable0>,<hex_data0> [[...] +UEXTDCONF: <device_N>,<configuration_enableN>,hex_dataN>] OK	+UEXTDCONF: 0,0,"0000000010 1E3F0400000633005000000008A" +UEXTDCONF: 1,0,"0000000010 1E3F0400000644002500000008A" +UEXTDCONF: 2,1,"0000000010 1E3F0400000655006A0000008A" OK
Test	AT+UEXTDCONF=?	+UEXTDCONF: (list of supported <device_id>s),(list of supported <configuration_enable>s),"hex data"	+UEXTDCONF: (0),(0,1),"hex data" OK

Type	Syntax	Response	Example
		OK	

22.14.3 Defined values

Parameter	Type	Description
<device_id>	Number	Device identifier. Allowed value: • 0 (factory-programmed value): Maxim MAX9860 audio codec, connected via I^2C. When enabled, at every start-up the module sets the external codec master clock at audio dependent 13 MHz (corresponding to the command AT+UMCLK=2,0) and configures the external codec via I^2C, see Notes below. Codec Maxim MAX9860 is available on u-blox evaluation boards. ☞ Setting AT+UEXTDCONF=0,1 forces at every start-up +UMCLK: 2,0 in NVM. To undo / remove this setting, explicitly issue the AT+UMCLK=0 command after every start-up with +UEXTDCONF: 0,1. Setting back by means of the command AT+UEXTDCONF=0,0 the clock (+UMCLK) is not automatically forced back to 0. To fully disable the codec use this AT command sequence: • AT+UMCLK=0,0 • AT+UEXTDCONF=0,0 • AT+CFUN=16
<configuration_enable>	Number	Enables/disables the autoconfiguration of the specified external device: • 0 (default and factory-programmed value): disabled • 1: enabled
<hex_data>	String	External device configuration expressed in bytes in hexadecimal format. For **<device_id>=0** (Maxim MAX9860 audio codec): the string must be composed of 18 bytes in hexadecimal format, the first being 0x00, otherwise an error result code ("+CME ERROR: operation not supported" if +CMEE is set to 2) will be provided. At every module's start-up the specified bytes sequence is sent, via I^2C, for the external codec configuration. • The first byte (0x00) is the address of the first register of the codec to be written (address 0x00). • The following 17 bytes are the values to be written in the codec's register 0x00 to 0x10 (for the meaning of bytes and the writing in the codec's registers, see Maxim MAX9860 datasheet [69]. The default and factory-programmed value of <device_id>=0 is "00000000101E3F0 40000063300500000008A".
<error>	String	If an incorrect number of parameters is provided or the parameter values are out of range the error result code "+CME ERROR: operation not supported" will be provided if +CMEE is set to 2.

22.14.4 Notes

- Examples:

Command / Action	Meaning
AT+UEXTDCONF=0,1,"00000000101E3F040000063300 250000008A AT+CFUN=16	The <hex_data> parameter is stored in the NVM. Program and enable the external audio codec after the module reset.
AT+UEXTDCONF=0,1 AT+CFUN=16	The <hex_data> parameter value stored in the NVM remains unchanged. Program and enable the external audio codec after the module reset.
AT+UEXTDCONF=0,1,"" AT+CFUN=16	The <hex_data> parameter is restored in the NVM to the factory-programmed value ("00000000101E3F0400000 63300500000008A"). Program and enable the external audio codec after the module reset.
AT+UEXTDCONF=0,1;+CPWROFF	Program and enable the external audio codec at the next module reboot.
AT+UMCLK=0,0 AT+UEXTDCONF=0,0	Disable the master clock. Disable the external audio codec at next module boot.

Command / Action	Meaning
AT+CFUN=16	Reset the module.
AT+UMCLK=0,0	Disable the master clock.
AT+UEXTDCONF=0,0	Disable the external audio codec at next module boot.
AT+CPWROFF	Power off the module.
Switch off/on the general power supply of evaluation board.	Power on. If the module and the external audio codec device are powered separately (e.g.: on EVK), and therefore codec setup is not reset, this procedure has be used for disabling the external audio codec.
AT+UEXTDCONF=0,1,"00000000000000000000000000000000000000";+CFUN=16	Reprogram the external audio codec to init state at the next module start-up.
AT+UMCLK=0,0	Stop the codec clock after the module reboot. If the module and the external audio codec device are powered separately (e.g.: EVK), and therefore codec setup is not reset,this is an alternative procedure for disabling the external audio codec without powering off.

TOBY-L2

- The <hex_data> parameter is not supported.
- Behavior for +UEXTDCONF: 0,1: Maxim MAX9860 audio codec is programmed dynamically via I^2C commands every time the audio path is enabled, according to gains stored in file audio_gain_calibration.xml. The +UVGC AT command can configure the settings. For more details, see TOBY-L2 series Audio Application Note [118].

SARA-U2 / LISA-U2

- The <hex_data> parameter is not supported. The configuration for each supported device is hard-coded in the firmware.
- Behavior for +UEXTDCONF: 0,1: when module is powered on, it configures the external codec in equivalent mode to the following AT command sequence:

Command	Meaning
AT+UI2CO=1,0,0,0x10,0	Open the I^2C logical channel (connected to the external codec).
AT+UI2CW="00000000101E3F2400000633004A0000008A",18	Send, via I^2C, the specified byte sequence. Data are written in the external codec registers for codec configuration (for the meaning of bytes and the writing in the codec's registers, see Maxim MAX9860 datasheet [69]). o LISA-U200-01S / LISA-U200-02S / LISA-U200-52S / LISA-U200-62S / LISA-U230 / LISA-U260 / LISA-U270 - This command is issued: AT+UI2CW="00000000108F2024000010330025000000008A",18. o SARA-U201-04A / SARA-U201-04B / SARA-U201-04X / SARA-U270-04B - This command is issued: AT+UI2CW="00000000101E3F0400000633005000000008A",18.
AT+UI2CW="049E",2	Send, via I^2C, the specified byte sequence (for external codec configuration).
AT+UI2CC	Close the I^2C logical channel.

SARA-U201-04A / SARA-U201-04B / SARA-U201-04X / SARA-U270-04B

- In case the AUX UART is enabled (that is the active +USIO variant is 4,5 or 6), since the I^2C lines are not available, the command immediately provides an error result code ("+CME ERROR: 3" if +CMEE=1 or "+CME ERROR: operation not allowed" if +CMEE=2).

LARA-R2 / TOBY-R2

- Behavior for +UEXTDCONF: 0,1: when module is powered on, it configures the external codec in equivalent mode to the following AT command sequence:

Command	Meaning
AT+UI2CO=1,0,0,0x10,0	Open the I²C logical channel (connected to the external codec).
AT+UI2CW=<hex_data>,18	Read the <hex_data> configuration bytes from NVM and send, via I²C, the byte sequence (for external codec configuration). Data are written in the external codec registers for codec configuration (for the meaning of bytes and the writing in the codec's registers, see Maxim MAX9860 datasheet [69]).
AT+UI2CW=<hex_data_reg4>,2	Set high, via I²C, bit7 in register 0x04 of codec (<hex_data_reg4> is "04xx", with xx byte is obtained setting high bit 7 in value reserved for codec's register 0x04 in <hex_data>; for the meaning of bytes, see Maxim MAX9860 datasheet [69]).
AT+UI2CC	Close the I²C logical channel.

22.15 Speech codec information +USPEECHINFO

+USPEECHINFO						
Modules	TOBY-L4006 TOBY-L4106 TOBY-L4206 TOBY-L4906-01A TOBY-L4906-51A					
	LARA-R202 LARA-R203 LARA-R211 LARA-R280 TOBY-R2					
	SARA-U270-04B					
Attributes	**Syntax**	**PIN required**	**Settings saved**	**Can be aborted**	**Response time**	**Error reference**
	full	No	No	No	-	+CME Error

22.15.1 Description

Provides the speech codec related information and enables the corresponding +UUSPEECHINFO URC. The URC is issued each time the speech codec changes.

22.15.2 Syntax

Type	Syntax	Response	Example
Set	AT+USPEECHINFO=<mode>	OK	AT+USPEECHINFO=1 OK
Read	AT+USPEECHINFO?	+USPEECHINFO: <mode>	+USPEECHINFO: 1 OK
Test	AT+USPEECHINFO=?	+USPEECHINFO: (list of supported <mode>s) OK	+USPEECHINFO: (0,1) OK
URC		+UUSPEECHINFO: <type>	+UUSPEECHINFO: 0

22.15.3 Defined values

Parameter	Type	Description
<mode>	Number	Allowed values: • 0 (default value): disables the reporting of speech codec when it changes • 1: enables the speech codec reporting through the +UUSPECHINFO URC
<type>	String	Speech codec. Allowed values: • 0: codec GSM Full Rate (13.0 kb/s) • 1: codec GSM Half Rate (5.6 kb/s) • 2: codec GSM Enhanced Full Rate (12.2 kb/s) • 3: codec Full Rate Adaptive Multi-Rate • 4: codec Half Rate Adaptive Multi-Rate • 5: codec UMTS Adaptive Multi-Rate • 6: codec UMTS Adaptive Multi-Rate 2 • 7: codec TDMA Enhanced Full Rate • 8: codec PDC Enhanced Full Rate

Parameter	Type	Description
		• 9: codec Full Rate Adaptive Multi-Rate Wideband • 10: codec UMTS Adaptive Multi-Rate Wideband • 11: codec OHR Adaptive Multi-Rate • 12: codec OFR Adaptive Multi-Rate Wideband • 13: codec OHR Adaptive Multi-Rate Wideband

22.16 Speech codec configuration +UDCONF=30

+UDCONF=30						
Modules	TOBY-L4006 TOBY-L4106 TOBY-L4206 TOBY-L200-02S TOBY-L200-03A TOBY-L200-03S TOBY-L210-02S TOBY-L210-03A TOBY-L210-03S TOBY-L210-62S TOBY-L220-02S TOBY-L280					
	LARA-R202 LARA-R203 LARA-R211 LARA-R280 TOBY-R2					
	SARA-U2 LISA-U200-01S LISA-U200-02S LISA-U200-03S LISA-U200-52S LISA-U200-62S LISA-U200-83S LISA-U201 LISA-U230 LISA-U260 LISA-U270					
	SARA-G340 SARA-G350 SARA-G350-53S LEON-G100-07S LEON-G100-08S					
Attributes	**Syntax**	**PIN required**	**Settings saved**	**Can be aborted**	**Response time**	**Error reference**
	partial	No	NVM	No	-	+CME Error

22.16.1 Description

Configures the allowed speech codec to be presented to the network during a voice call setup.

The supported codec list may vary for each product. The <supported_codec_bitmap> must be checked before making any change.

☞ The command does not affect VoLTE calls.

☞ The new setting is saved in NVM and is immediately used.

☞ u-blox cellular modules are certified according to all the capabilities and options stated in the Protocol Implementation Conformance Statement document (PICS) of the module. The PICS, according to 3GPP TS 51.010-2 [84], 3GPP TS 34.121-2 [85], 3GPP TS 36.521-2 [115] and 3GPP TS 36.523-2 [116], is a statement of the implemented and supported capabilities and options of a device. If the user changes the command settings during the certification process, the PICS of the application device integrating a u-blox cellular module must be changed accordingly.

22.16.2 Syntax

Type	Syntax	Response	Example
Set	AT+UDCONF=30,<codec_bitmap>	OK	AT+UDCONF=30,31 OK
Read	AT+UDCONF=30	+UDCONF: 30,<active_codec_bitmap>,<supported_codec_bitmap> OK	AT+UDCONF=30 +UDCONF: 30,31,255 OK

22.16.3 Defined values

Parameter	Type	Description
<codec_bitmap>	Number	Bitmask representing the list of available speech codecs to be presented to the network during voice call setup. The supported speech codecs and the corresponding bit in the bitmask are listed as follows: • 0: Full Rate Adaptive Multi-Rate (FR AMR) • 1: GSM Enhanced Full Rate (12.2 kb/s) (GSM EFR) • 2: GSM Full Rate (13.0 kb/s) (GSM FR) • 3: Half Rate Adaptive Multi-Rate (HR AMR) • 4: GSM Half Rate (5.6 kb/s) (GSM HR) • 5: Full Rate Adaptive Multi-Rate WideBand (FR AMR WB) • 6: 8-PSK Half Rate Adaptive Multi-Rate (8-PSK HR AMR) • 7: 8-PSK Full Rate Adaptive Multi-Rate WideBand (8-PSK FR AMR WB)

Parameter	Type	Description
		• 8: 8-PSK Half Rate Adaptive Multi-Rate WideBand (8-PSK HR AMR WB) • 9: UMTS Adaptive Multi-Rate (UMTS AMR) • 10: UMTS Adaptive Multi-Rate 2 (UMTS AMR 2) • 11: UMTS Adaptive Multi-Rate WideBand (UMTS AMR WB) GSM Full Rate must be always presented to the network, thus is always implicitly set. See Table 72 for the meaning of each bit and codec availability.
<active_codec_bitmap>	Number	The currently active codecs, in the format described for <codec_bitmap>
<supported_codec_bitmap>	Number	The list of currently supported codecs, in the format described for <codec_bitmap>

22.16.4 Notes

Bit	0	1	2	3	4	5	6	7	8	9	10	11
TOBY-L4	•	•	•	•	•	•					•	•
TOBY-L2	•	•	•	•	•	•				•	•	•
LARA-R202										•	•	•
LARA-R203										•	•	•
LARA-R211	•	•	•	•	•	•						
LARA-R280										•	•	•
TOBY-R200	•	•	•	•	•	•				•	•	•
TOBY-R202										•	•	•
SARA-U2	•	•	•	•	•	•					•	•
SARA-U270-53S	•	•	•	•	•	•				•	•	•
LISA-U2	•	•	•	•	•	•					•	•
SARA-G3	•	•	•	•	•							
LEON-G1	•	•	•	•	•							

Table 72: Speech codec bit availability on modules

TOBY-L4

- The allowed range of <codec_bitmap> is 1-3135 (equivalent to bits 000000000001-110000111111).
- The factory-programmed value of <active_codec_bitmap> is 3135 (110000111111).

TOBY-L2

- The allowed range of <codec_bitmap> is 1-3647 (equivalent to bits 000000000001-111000111111).
- The factory-programmed value of <active_codec_bitmap> is 3647.

LARA-R211

- The allowed range of <codec_bitmap> is 1-63 (equivalent to bits 000000000001-000000111111); bit 2 (GSM Full Rate) is always implicitly set to 1.
- The factory-programmed value of <active_codec_bitmap> is 63.

TOBY-R200

- The allowed range of <codec_bitmap> is 1-3647 (equivalent to bits 000000000001-111000111111); bit 2 (GSM Full Rate) is always implicitly set to 1.
- The factory-programmed value of <active_codec_bitmap> is 3647.

LARA-R202 / LARA-R203 / TOBY-R202

- The allowed range of <codec_bitmap> is 512-3584 (equivalent to bits 001000000000-111000000000).
- The factory-programmed value of <active_codec_bitmap> is 3584.

SARA-U2 / LISA-U2

- The allowed range of <codec_bitmap> is 1-3135 (equivalent to bits 000000000001-110000111111); bit 2 (GSM Full Rate) is always implicitly set to 1.
- The factory-programmed value of <active_codec_bitmap> is 3135.

SARA-U270-53S

- The allowed range of <codec_bitmap> is 1-3647 (equivalent to bits 000000000001-111000111111); bit 2 (GSM Full Rate) is always implicitly set to 1.
- The factory-programmed value of <active_codec_bitmap> is 1567, i.e. UMTS Adaptive Multi-Rate 2 is not active.

LISA-U200-00S / LISA-U200-01S / LISA-U230 / LISA-U260-01S / LISA-U270-01S

- The bit 2 (GSM Full Rate) in <codec_bitmap> can be set to 0.

SARA-G340 / SARA-G350

- The allowed range of <codec_bitmap> is 1-31 (equivalent to bits 00001-11111).
- The factory-programmed value of <active_codec_bitmap> is 31.

LEON-G1

- The allowed range of <codec_bitmap> is 0-31 (equivalent to bits 00000-11111).
- The factory-programmed value of <active_codec_bitmap> is 31.

22.17 Waiting call tone configuration +UDCONF=33

+UDCONF=33						
Modules	TOBY-L200-03A TOBY-L200-03S TOBY-L210-03A TOBY-L210-03S TOBY-L280-03A TOBY-L280-03S MPCI-L200-03S MPCI-L210-03S MPCI-L280-03S					
Attributes	**Syntax**	**PIN required**	**Settings saved**	**Can be aborted**	**Response time**	**Error reference**
	full	No	NVM	No	-	+CME Error

22.17.1 Description

Configures the volume or disables the waiting call tone locally generated.

The tone is generated during a voice call, when a second incoming call is in progress.

☞ The new setting is saved in NVM and is immediately used at the next incoming call.

22.17.2 Syntax

Type	Syntax	Response	Example
Set	AT+UDCONF=33,<tone_volume>	OK	AT+UDCONF=33,2 OK
Read	AT+UDCONF=33	+UDCONF: 33,<tone_volume> OK	AT+UDCONF=33 +UDCONF: 33,2 OK

22.17.3 Defined values

Parameter	Type	Description
<tone_volume>	Number	Volume of the waiting call tone (the factory-programmed value is 4): • 0: waiting call supervisory tone disabled • 1-5: waiting call supervisory tone volume

22.18 Hardware audio path test +UMAAT

+UMAAT						
Modules	TOBY-L4					
Attributes	**Syntax**	**PIN required**	**Settings saved**	**Can be aborted**	**Response time**	**Error reference**
	full	No	No	No	< 2 s	+CME Error

22.18.1 Description

Generates a tone with specified frequency and amplitude while recording from microphone with a specified bitrate and duration. Audio samples will be then automatically uploaded to the host once recording is done. This command is used for hardware audio path test where the output from codec is redirected to the

microphone input which records the tone, usually the quality of this audio loop is then analyzed by an external post-processing of the recorded samples.

The recording samples are returned in a WAV file ("WAV recording data") as a stream of bytes in a response syntax similar to +URDFILE. Approximate size of the response can be calculated in bytes as:

```
2 * duration * sample_rate / 1000
```

☞ The external codec must be already configured before using this command, for example by issuing +UEXTDCONF command (which enables automatically +UMCLK too).

22.18.2 Syntax

Type	Syntax	Response	Example
Set	AT+UMAAT=<frequency>,<sample_rate>,<duration>,<amplitude>[,<mic_id>]	+UMAAT: <size>,<data> OK	AT+UMAAT=440,8000,600,5000 +UMAAT: 12332,"WAV recording data" OK
Test	AT+UMAAT=?	+UMAAT: (list of supported <frequency>s),(list of supported <sample_rate>s),(list of supported <duration>s),(list of supported <amplitude>s),(list of supported <mic_id>s) OK	+UMAAT: (100-3900),(8000,16000),(20-3000),(0-32767),(1,2) OK

22.18.3 Defined values

Parameter	Type	Description
<frequency>	Number	Frequency of the tone generated, in Hz: • TOBY-L4 - The allowed range is 100-3900 Hz.
<sample_rate>	Number	Sample rate used for recording, in Hz: • TOBY-L4 - The allowed values are 8000 Hz and 16000 Hz.
<duration>	Number	Duration of the recording, in milliseconds: • TOBY-L4 - The allowed range is 20-3000 ms.
<amplitude>	Number	Amplitude of the tone generated: • TOBY-L4 - The allowed range is 0-32767.
<mic_id>	Number	Microphone ID used to select the microphone to do the recording: • 1 (default value): AMIC1 is used • 2 : AMIC2 is used
<size>	Number	Recorded sample size, in bytes
<data>	String	Recording content

22.18.4 Notes

TOBY-L4

- The syntax of the information text response to the set command is +UMAAT: <size>. Then the user should start receiving <size> bytes of file data on a dedicated channel of the USB CDC-ACM interface. At the completion the "OK" final result code is displayed. The AT terminal is blocked until all data is sent.

23 Audio parameters tuning

23.1 Introduction

All audio-featured u-blox modules integrate a speech processing system, which is a set of voiceband filters required for transducer equalisation (external microphone and speaker), and a Speech Enhancement System (SES) dedicated to echo cancellation and noise reduction. The speech processing system has to be tuned by OEMs with respect to their audio set-up and use case (e.g. in-vehicle hands-free system) and tuned parameters stored in the selected audio path (for more details, see the +USPM AT command).

Each path includes a set of parameters that are loaded by the audio driver in the speech processing system; for example, the uplink path can include the microphone gain that can be different for handset or headset microphone path.

For each audio path, the configuration of the uplink and downlink audio paths parameters is possible by means of the following AT commands (where supported):

Gain control:

- AT+UMGC: Microphone Gain Control
- AT+USGC: Speaker Gain Control
- AT+USTN: SideTone
- AT+UMAFE: Microphone Gains on Analog Front End (when an internal audio codec is supported)
- AT+USAFE: Speaker Gains on Analog Front End (when an internal audio codec is supported)

Transducers equalisation (microphone, speaker):

- AT+UUBF: Uplink Biquad Filters
- AT+UDBF: Downlink Biquad Filters

Speech enhancement algorithms control and tuning for hands-free systems:

- AT+UHFP: Basic tuning (basic parameters of Speech Enhancement System (SES) in uplink)
- AT+UTI: Extended tuning (full control of Speech Enhancement System (SES) in uplink and downlink)

Some products present a different interface for gain control, transducers equalisation and algorithms tuning (where supported):

- AT+UAPT: Audio Parameter Tuning
- AT+UVGC: Volume Gain Control of external Maxim MAX9860 audio codec (connected via I^2C)

The audio parameters configuration for all the audio paths can be stored in one of the two available user profiles in NVM by AT&W command (where supported) or alternatively stored immediately by the AT command in the non volatile memory (check the "Settings Saved" attribute of each command to know the storing modality it uses).

The audio parameters in the user profiles in NVM are managed by commands AT&W (it saves in profile 0 or profile 1), AT&F (it resets to the factory profile), AT&Y (it selects user profile to be used after hardware reset), and ATZ (it reloads the user profile).

Setting of +UAPT and +UVGC, where supported, can also be stored in one of the two available user profiles in NVM and recovered.

The AT&V command does not display the audio parameters settings. The audio parameters can be displayed by the corresponding read command, for example AT+UMGC?.

See the following subsections for an explanation of the audio path relations and position in the audio paths of parts affected by audio parameters.

23.1.1 TOBY-L2

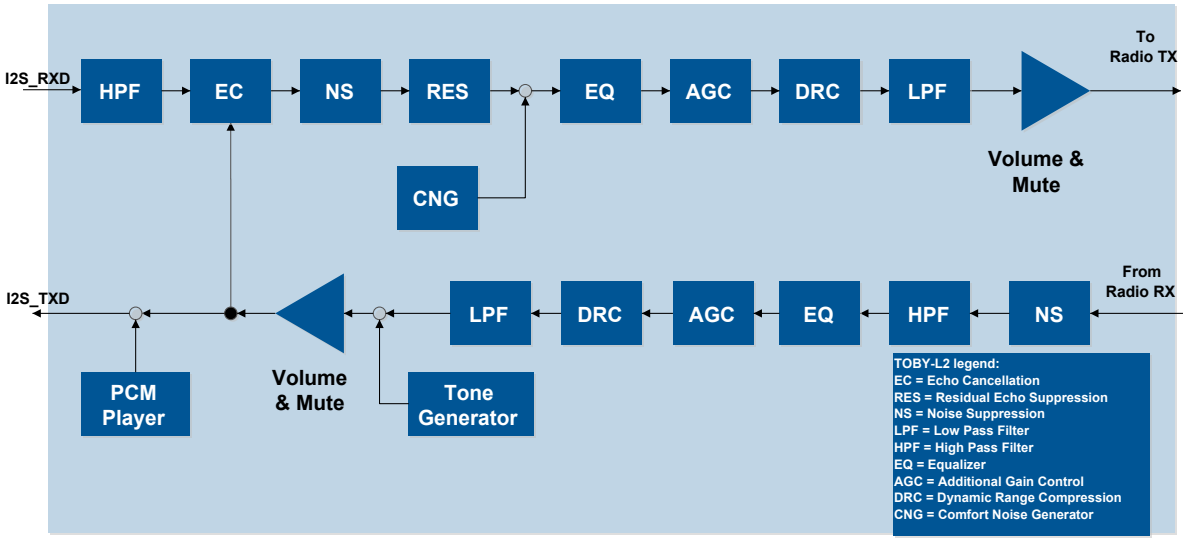

Figure 13: Audio paths

- The management and parameters tuning of audio paths can be configured by means of the following AT commands:
  - +UAPT (Audio Parameter Tuning): audio parameters management for all the signal processing blocks:
    - High Pass Filter (**HPF**)
    - Echo Cancellation (**EC**)
    - Noise Suppression (**NS**)
    - Residual Echo Suppression (**RES**)
    - Equalizer (**EQ**)
    - Additional Gain Control (**AGC**)
    - Dynamic Range Compression (**DRC**)
    - Low Pass Filter (**LPF**)
  - +USPM (Set Path Mode)
  - +UVGC (Volume Gain Control): gains of external Maxim MAX9860 audio codec (connected via I^2C interface)
  - +CLVL(Loudspeaker Volume Level): sets the downlink **Volume & Mute**
- Sidetone must be generated by the external codec connected via I^2C interface). For sidetone control on Maxim MAX9860 audio codec, see +UVGC (Volume Gain Control).
- The audio parameters configuration for all the audio paths can be stored in the user profiles by AT&W. The audio parameters configuration can be restored to factory-programmed values by AT&F.
- The module supports the following speech codecs for GSM:
  - Full Rate speech codec (8 kHz sampling rate)
  - Enhanced Full Rate speech codec (8 kHz sampling rate)
  - Half Rate speech codec (8 kHz sampling rate)
  - NB-AMR speech codec (8 kHz sampling rate)
  - WB-AMR speech codec (16 kHz sampling rate)
- The module supports the following speech codecs for UMTS:
  - NB-AMR speech codec (8 kHz sampling rate)
  - WB-AMR speech codec (16 kHz sampling rate)
- The tone generator generates the tones (see +UTGN command) and the pre-defined tones (see +UPAR command), the alarm tone (see +CALA command). The PCM player (see +UPLAYFILE command) is used by the ringer tones on an incoming call and SMS reception tone. See also +CRSL command and +CALM command.

23.1.2 TOBY-L4

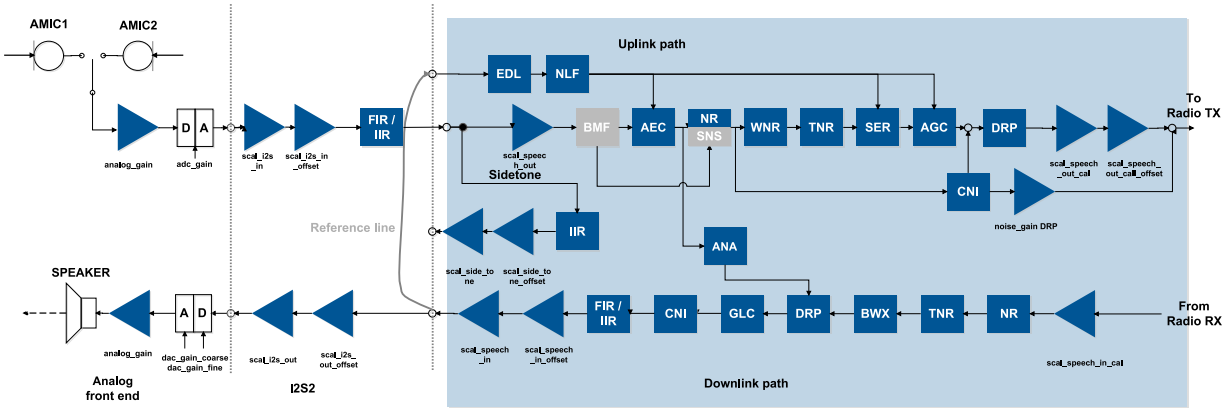

Figure 14: Audio analog path

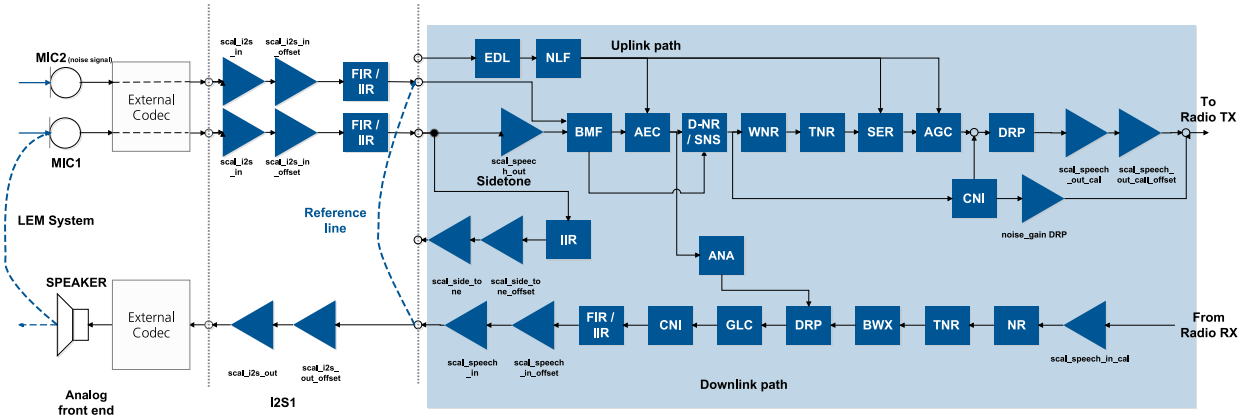

Figure 15: Audio digital path

- The management and parameters tuning of audio paths and profiles can be configured by means of the following interfaces:
  - +UTI
    - FIR/IIR equalizers for microphones and loudspeakers (**FIR/IIR**)
    - Echo Cancellation (**EDL, NLF, AEC**)
    - Noise Suppressors in uplink/downlink (**NR, Spatial noise SNS, Wind noise WNR, Traffic noise TNR**)
    - Residual Echo Suppressors (**SER, AGC**)
    - Beamformer (**BMF**)
    - Dynamic Range Processors (Companders) in uplink/downlink (**DRP**)
    - Ambient Noise Adapter (**ANA**)
    - Gains on **Uplink/Downlink path**
    - Gains **scal_i2s_in_offset/scal_i2s_out_offset** on **I2S1/I2S2**
    - Gain Control on downlink (**GLC**)
    - Comfort Noise Injectors (**CNI**)
  - +USPM (Set Path Mode)
  - +UMSEL (Select microphone **AMIC1/AMIC2** on analog path)
  - +UMAFE (Microphone gains **analog_gain,adc_gain** control on analog path)
  - +USAFE (Speaker gains **analog_gain,dac_gain_coarse/fine** control on analog path)
  - +UMGC (Microphone gain **scal_i2s_in** control on **I2S** interface)
  - +USGC (Speaker gain **scal_i2s_out** control on **I2S** interface)

  - +CLVL (Downlink Speech Level control by **scal_speech_in**)
  - +CMUT (Uplink Speech Muting control by **scal_speech_out_cal**)
- The audio parameters configuration for all the audio paths can be stored in the user profiles by +UTI. The audio parameters configuration can be restored to factory-programmed values by +UTI
- The module supports the following speech codecs for GSM:
  - Full Rate speech codec (8 kHz sampling rate)
  - Enhanced Full Rate speech codec (8 kHz sampling rate)
  - Half Rate speech codec (8 kHz sampling rate)
  - NB-AMR speech codec (8 kHz sampling rate)
  - WB-AMR speech codec (16 kHz sampling rate)
- The module supports the following speech codecs for UMTS:
  - NB-AMR speech codec (8 kHz sampling rate)
  - WB-AMR speech codec (16 kHz sampling rate)

23.1.3 LARA-R2 / TOBY-R2

☞ LARA-R204 / LARA-R220
The audio interface is not supported.

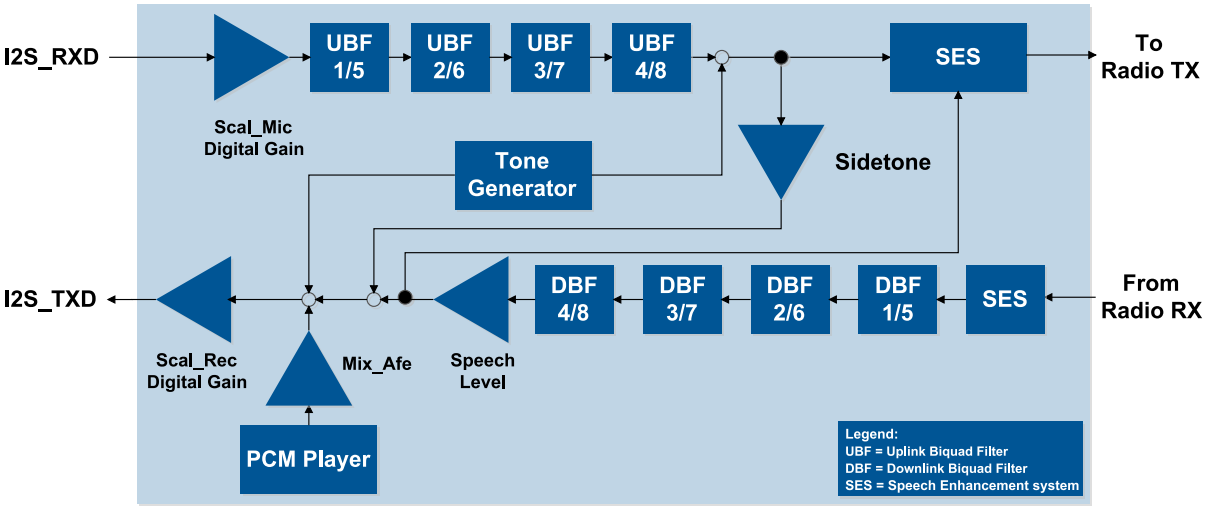

Figure 16: Audio paths

- Allowed values for audio path tuning:
  - **<uplink_path_num>**
    - 0: uplink path 0 via I2S
    - 1: uplink path 1 via I2S
    - 2: uplink path 2 via I2S
    - 3: uplink path 3 via I2S
    - 4: uplink path 4 via I2S
  - **<downlink_path_num>**
    - 0: downlink path 0 via I2S
    - 1: downlink path 1 via I2S
    - 2: downlink path 2 via I2S
    - 3: downlink path 3 via I2S
    - 4: downlink path 4 via I2S
- For downlink path, biquad filters 1-4 are used with speech codec at 8 kHz sampling rate, filters 1-5 are used with speech codec at 16 kHz sampling rate.
- For uplink path, uplink biquad filters 5-8 are used if the I^2S sampling rate is 16 kHz, uplink biquad filters 1-4 for all the others I^2S sampling rates.

- The module supports the following speech codecs for GSM:
  - Full Rate speech codec (8 kHz sampling rate)
  - Enhanced Full Rate speech codec (8 kHz sampling rate)
  - Half Rate speech codec (8 kHz sampling rate)
  - NB-AMR speech codec (8 kHz sampling rate)
  - WB-AMR speech codec (16 kHz sampling rate)
- The module supports the following speech codecs for UMTS:
  - NB-AMR speech codec (8 kHz sampling rate)
  - WB-AMR speech codec (16 kHz sampling rate)
- The +CLVL command sets the downlink **Speech Level**
- The +UDBF command sets the biquad filters (**DBF**) on the downlink path.
- A noise reduction (**NR**) block reduces the noise on the downlink speech.
- The <scal_rec> parameter in +USGC command controls the **Scal_Rec** digital gain.
- The <digital_gain> parameter in +UMGC command controls the **Scal_Mic** digital gain.
- The +UUBF command sets the biquad filters (**UBF**) on the uplink path.
- The +UHFP command controls the Speech Enhancement System(**SES**)
- The +USTN command controls the **Sidetone**.
- The tone generator generates the tones (see +UTGN command), the pre-defined tones and MIDI melodies (see +UPAR command), the alarm tone (see +CALA command), the ringer tones on an incoming call, SMS reception tone and the service tones (e.g.: Call Waiting tone). They are affected by the <Scal_Rec> digital gain (see +USGC command). The PCM player (see +UPLAYFILE command) is affected by <Mix_afe> parameter (see +USGC command). See also +CRSL command and +CALM command.

23.1.4 SARA-U2

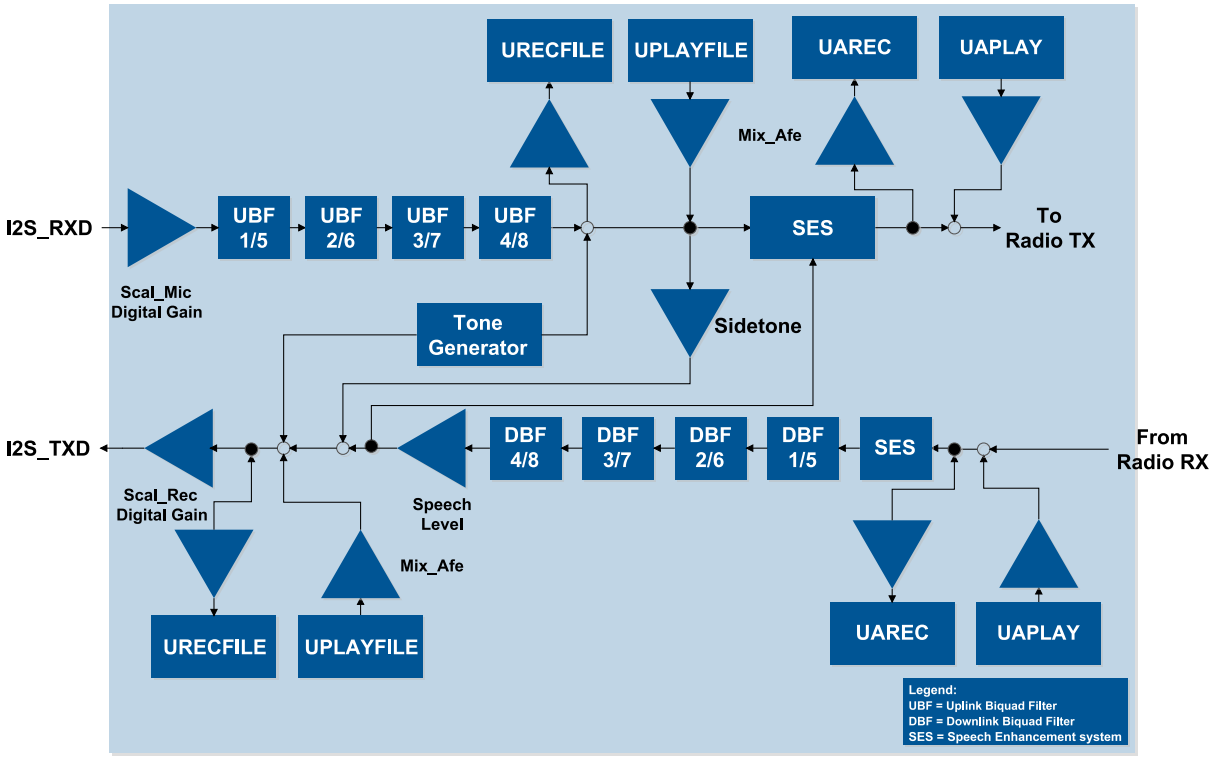

Figure 17: Audio paths of SARA-U201 / SARA-U270 "04" product versions

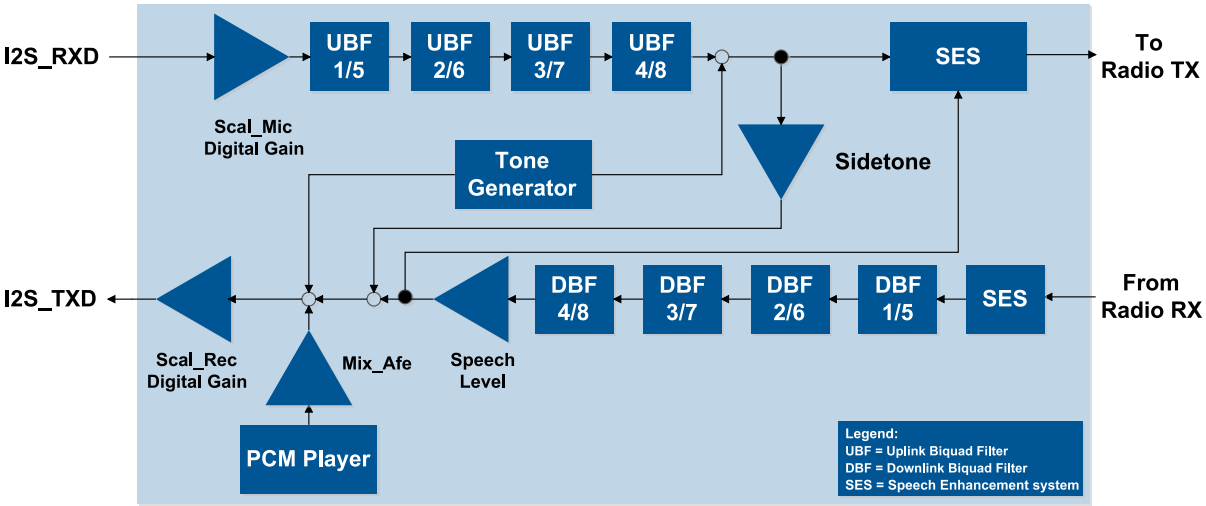

Figure 18: Audio paths

- Allowed values for audio path tuning:
  - **<uplink_path_num>**
    - 0: uplink path 0 via I2S
    - 1: uplink path 1 via I2S
    - 2: uplink path 2 via I2S
    - 3: uplink path 3 via I2S
    - 4: uplink path 4 via I2S
  - **<downlink_path_num>**
    - 0: downlink path 0 via I2S
    - 1: downlink path 1 via I2S
    - 2: downlink path 2 via I2S
    - 3: downlink path 3 via I2S
    - 4: downlink path 4 via I2S
- For downlink path, biquad filters 1-4 are used with speech codec at 8 kHz sampling rate, filters 1-5 are used with speech codec at 16 kHz sampling rate.
- For uplink path, uplink biquad filters 5-8 are used if the I^2S sampling rate is 16 kHz, uplink biquad filters 1-4 for all the others I^2S sampling rates.
- The module supports the following speech codecs for GSM:
  - Full Rate speech codec (8 kHz sampling rate)
  - Enhanced Full Rate speech codec (8 kHz sampling rate)
  - Half Rate speech codec (8 kHz sampling rate)
  - NB-AMR speech codec (8 kHz sampling rate)
  - WB-AMR speech codec (16 kHz sampling rate)
- The module supports the following speech codecs for UMTS:
  - NB-AMR speech codec (8 kHz sampling rate)
  - WB-AMR speech codec (16 kHz sampling rate)
- The +CLVL command sets the downlink **Speech Level**
- The +UDBF command sets the biquad filters (**DBF**) on the downlink path.
- A noise reduction (**NR**) block reduces the noise on the downlink speech.
- The <scal_rec> parameter in +USGC command controls the **Scal_Rec** digital gain.
- The <digital_gain> parameter in +UMGC command controls the **Scal_Mic** digital gain.
- The +UUBF command sets the biquad filters (**UBF**) on the uplink path.
- The +UHFP command controls the Speech Enhancement System (**SES**), for easy tuning.
- The +UTI command controls the Speech Enhancement System (**SES**) in uplink and downlink.

- The +USTN command controls the **Sidetone**.
- The tone generator generates the tones (see +UTGN command), the pre-defined tones and MIDI melodies (see +UPAR command), the alarm tone (see +CALA command), the ringer tones on an incoming call, SMS reception tone and the service tones (e.g.: Call Waiting tone). They are affected by the <Scal_Rec> digital gain (see +USGC command). The PCM player (see +UPLAYFILE command) is affected by <Mix_afe> parameter (see +USGC command). See also +CRSL command and +CALM command.

23.1.5 LISA-U2

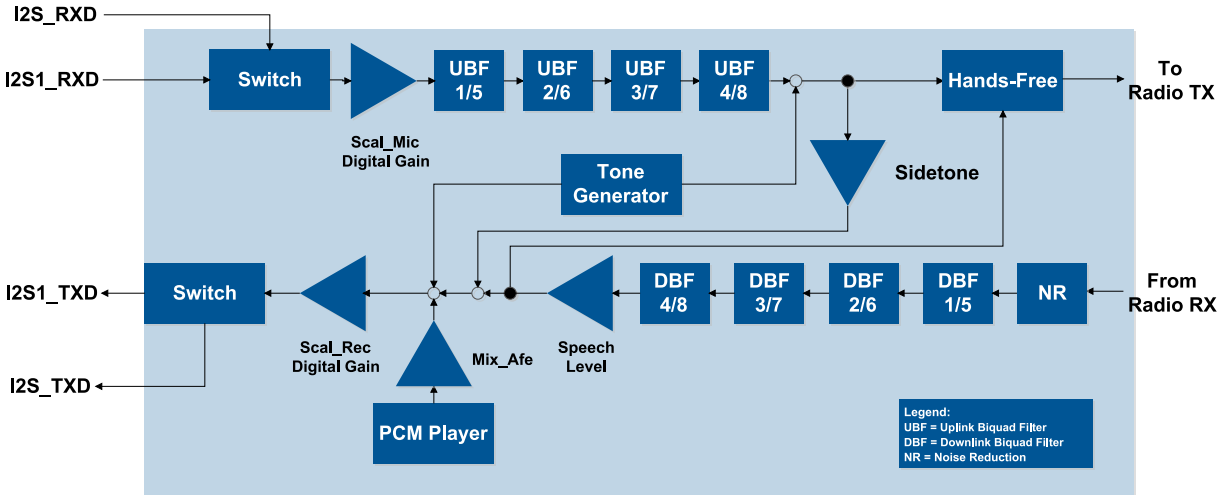

Figure 19: Audio paths

- Allowed values for audio path tuning:
  - **<uplink_path_num>**
    - 0: uplink path 0 via I2S
    - 1: uplink path 1 via I2S
    - 2: uplink path 2 via I2S
    - 3: uplink path 3 via I2S
    - 4: uplink path 4 via I2S
    - 5: uplink path 5 via I2S1
    - 6: uplink path 6 via I2S1
    - 7: uplink path 7 via I2S1
    - 8: uplink path 8 via I2S1
    - 9: uplink path 9 via I2S1
  - **<downlink_path_num>**
    - 0: downlink path 0 via I2S
    - 1: downlink path 1 via I2S
    - 2: downlink path 2 via I2S
    - 3: downlink path 3 via I2S
    - 4: downlink path 4 via I2S
    - 5: downlink path 5 via I2S1
    - 6: downlink path 6 via I2S1
    - 7: downlink path 7 via I2S1
    - 8: downlink path 8 via I2S1
    - 9: downlink path 9 via I2S1
- For downlink path, biquad filters 1-4 are used with speech codec at 8 kHz sampling rate, filters 1-5 are used with speech codec at 16 kHz sampling rate.
- For uplink path, uplink biquad filters 5-8 are used if the I^2S sampling rate is 16 kHz, uplink biquad filters 1-4 for all the others I^2S sampling rates.

- The module supports the following speech codecs for GSM:
  - Full Rate speech codec (8 kHz sampling rate)
  - Enhanced Full Rate speech codec (8 kHz sampling rate)
  - Half Rate speech codec (8 kHz sampling rate)
  - NB-AMR speech codec (8 kHz sampling rate)
  - WB-AMR speech codec (16 kHz sampling rate)
- The module supports the following speech codecs for UMTS:
  - NB-AMR speech codec (8 kHz sampling rate)
  - WB-AMR speech codec (16 kHz sampling rate)
- The +CLVL command sets the downlink **Speech Level**.
- The +UDBF command sets the biquad filters (**DBF**) on the downlink path.
- A noise reduction (**NR**) block reduces the noise on the downlink speech.
- The <scal_rec> parameter in +USGC command controls the **Scal_Rec** digital gain.
- The <digital_gain> parameter in +UMGC command controls the **Scal_Mic** digital gain.
- The +UUBF command sets the biquad filters (**UBF**) on the uplink path.
- The +UHFP command controls the Speech Enhancement System (**SES**).
- The +USTN command controls the **Sidetone**.
- The tone generator generates the tones (see +UTGN command), the pre-defined tones and MIDI melodies (see +UPAR command), the alarm tone (see +CALA command), the ringer tones on an incoming call, SMS reception tone and the service tones (e.g.: Call Waiting tone). They are affected by the <Scal_Rec> digital gain (see +USGC command). The PCM player (see +UPLAYFILE command) is affected by <Mix_afe> parameter (see +USGC command). See also +CRSL command and +CALM command.

23.1.6 LISA-U120 / LISA-U130

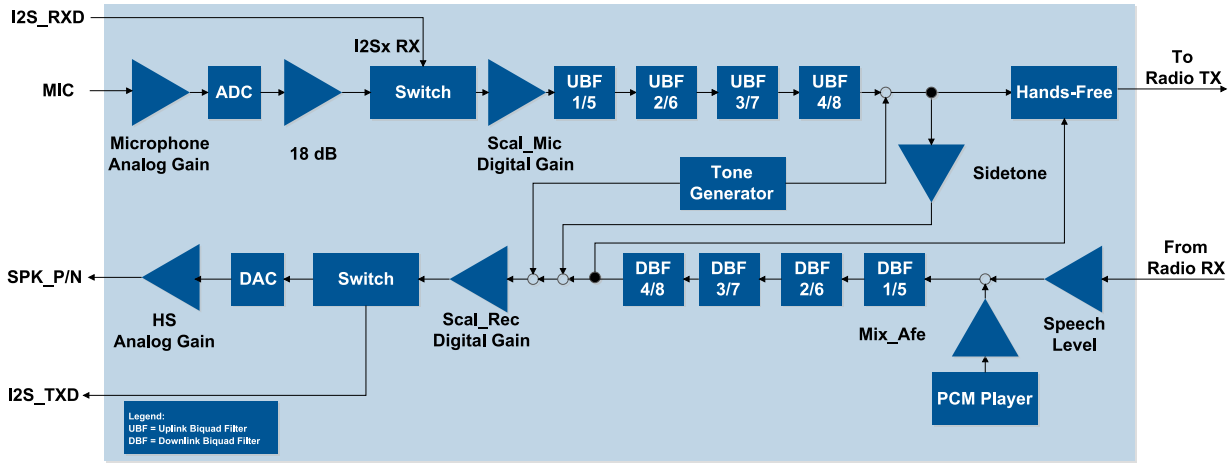

Figure 20: Audio paths

- Allowed values for audio path tuning:
  - **<uplink_path_num>**
    - 0: handset microphone (pins: MIC_P, MIC_N)
    - 1: headset microphone (pins: MIC_P, MIC_N)
    - 2: I^2S input line (pin I2S_RXD)
    - 4: hands-free microphone (pins: MIC_P, MIC_N)
  - **<downlink_path_num>**
    - 0: normal earpiece (pins: SPK_N, SPK_P)
    - 1: mono headset (pins: SPK_N, SPK_P)
    - 3: loudspeaker (pins: SPK_N, SPK_P)
    - 4: I^2S output line (pin I2S_TXD)

- For both uplink and downlink paths, biquad filters 1-4 are used with speech codec at 8 kHz sampling rate, filters 1-5 are used with speech codec at 16 kHz sampling rate.
- The module supports the following speech codecs for GSM:
  - Full Rate speech codec (8 kHz sampling rate)
  - Enhanced Full Rate speech codec (8 kHz sampling rate)
  - Half Rate speech codec (8 kHz sampling rate)
  - NB-AMR speech codec (8 kHz sampling rate)
  - WB-AMR speech codec (16 kHz sampling rate)
- The module supports the following speech codecs for UMTS:
  - NB-AMR speech codec (8 kHz sampling rate)
  - WB-AMR speech codec (16 kHz sampling rate)
- The +CLVL command sets the downlink **Speech Level**
- The +UDBF command sets the biquad filters (**DBF**) on the downlink path.
- The +USGC command controls the **Scal_Rec** digital gain and the **HS** (headset) analog gain.
- The +UMGC command controls the **Scal_Mic** digital gain and the **Microphone** analog gain.
- The +UUBF command controls the biquad filters (**UBF**) on the uplink path.
- The +UHFP command controls the Speech Enhancement System (**SES**).
- The +USTN command controls the **Sidetone**.

23.1.7 SARA-G340 / SARA-G350

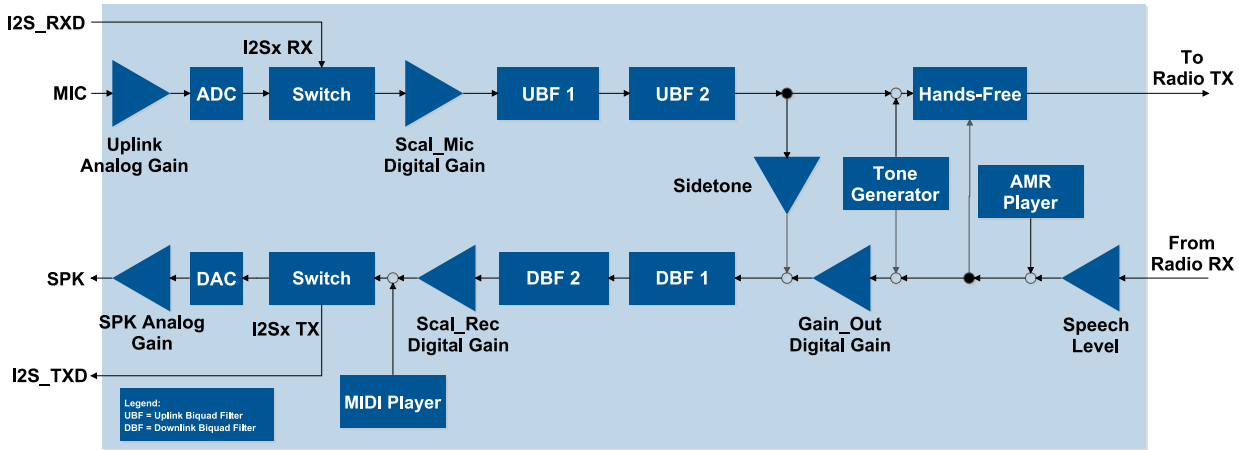

Figure 21: Audio paths

- Allowed values for audio path tuning:
  - **<uplink_path_num>**
    - 0: handset microphone (pins: MIC_P, MIC_N, MIC_BIAS, MIC_GND)
    - 1: headset microphone (pins: MIC_P, MIC_N, MIC_BIAS, MIC_GND)
    - 2: I^2S input line (pin I2S_RXD)
    - 4: hands-free microphone (pins: MIC_P, MIC_N, MIC_BIAS, MIC_GND)
  - **<downlink_path_num>**
    - 0: normal earpiece (pins: SPK_N, SPK_P)
    - 1: mono headset (pins: SPK_N, SPK_P)
    - 3: loudspeaker (pins: SPK_N, SPK_P)
    - 4: I^2S output line (pin I2S_TXD)
- The module supports the following speech codecs for GSM:
  - Full Rate speech codec (8 kHz sampling rate)
  - Enhanced Full Rate speech codec (8 kHz sampling rate)
  - Half Rate speech codec (8 kHz sampling rate)
  - NB-AMR speech codec (8 kHz sampling rate)

  - All these codecs are based on a 8 kHz sampling rate, thus all the biquad filters work at 8 kHz sampling rate.
- The +CLVL command sets the downlink **Speech Level**
- The +UDBF command sets the biquad filters (**DBF**) on the downlink path.
- The +USGC command controls the **Scal_Rec** and **Gain_out** digital gains and the **SPK** analog gain.
- The +UMGC command controls the **Scal_Mic** digital gain and the **Uplink** analog gain.
- The +UUBF command controls the biquad filters (**UBF**) on the uplink path.
- The +UHFP command controls the Speech Enhancement System (**SES**).
- The +USTN command controls the **Sidetone**.
- The tone generator generate the tones (see the +UTGN command), the pre-defined tones (see the +UPAR command), the alarm tone (see the +CALA command), the SMS reception tone and service tones (e.g.: Call Waiting tone). They are affected by <Gain_out>, <Scal_Rec> and <Analog_gain> parameters (see the +USGC command). The MIDI melodies (see the +UPAR command) and ringer tones on an incoming call are generated by the MIDI player and their volume is affected by <Mix_afe> parameter (see the +USGC command). The AMR player (see the +UPLAYFILE command) is affected by <Gain_out>, <Scal_Rec> and <Analog_gain> parameters (see the +USGC command). See also +CRSL command and +CALM command.

23.1.8 LEON-G1

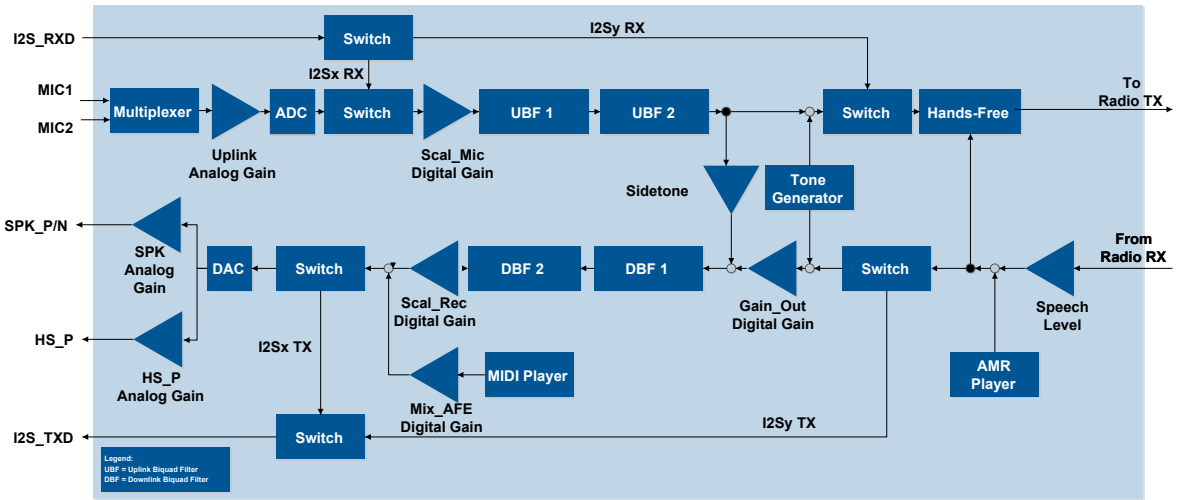

Figure 22: Audio paths

- Allowed values for audio path tuning:
  - **<uplink_path_num>**
    - 0: handset microphone (pins: MIC_BIAS1, MIC_GND1)
    - 1: headset microphone (pins: MIC_BIAS2, MIC_GND2)
    - 2: I^2S input line (pin I2S_RXD)
  - **<downlink_path_num>**
    - 0: normal earpiece (pins: HS_P, GND)
    - 1: mono headset (pins: HS_P, GND)
    - 3: loudspeaker (pins: SPK_P, SPK_N)
    - 4: I^2S output line (pin I2S_TXD)
- The module supports the following speech codecs for GSM:
  - Full Rate speech codec (8 kHz sampling rate)
  - Enhanced Full Rate speech codec (8 kHz sampling rate)
  - Half Rate speech codec (8 kHz sampling rate)
  - NB-AMR speech codec (8 kHz sampling rate)
  - All these codecs are based on a 8 kHz sampling rate, thus all the biquad filters work at 8 kHz sampling rate.

- The +CLVL command sets the downlink **Speech Level**
- The +UDBF command sets the biquad filters (**DBF**) on the downlink path.
- The +USGC command controls **Scal_Rec** and **Gain_out** digital gains, the **HS_P** (Headset) and the **SPK** (speaker) analog gains.
- The +UMGC command controls the **Scal_Mic** digital gain and the **Uplink** analog gain.
- The +UUBF command controls the biquad filters (**UBF**) on the uplink path.
- The +UHFP command controls the Speech Enhancement System (**SES**).
- The +USTN command controls the **Sidetone**.
- The tone generator generate the tones (see the +UTGN command), the pre-defined tones (see the +UPAR command), the alarm tone (see the +CALA command), the SMS reception tone and service tones (e.g.: Call Waiting tone). They are affected by <Gain_out>, <Scal_Rec> and <Analog_gain> parameters (see the +USGC command). The MIDI melodies (see the +UPAR command) and ringer tones on an incoming call are generated by the MIDI player and their volume is affected by <Mix_afe> parameter (see the +USGC command). The AMR player (see the +UPLAYFILE command) is affected by <Gain_out>, <Scal_Rec> and <Analog_gain> parameters (see the +USGC command). See also +CRSL command and +CALM command.

23.1.9 Notes

☞ The tone generator can be routed toward downlink and/or uplink path by <UplinkSending> parameter of +UTGN command.

The audio parameters in the factory-programmed profile are stored in static NVM and the user cannot change them.

☞ SARA-U2 / LISA-U2 / LISA-U1 / SARA-G340 / SARA-G350

- Some parameters present on LEON-G1 series are not available but they are still maintained in the command for backward compatibility. In this case the 'NA' string appears in the information text response to the test command; the NA parameter is not stored in the NVM.
  E.g.:
  AT+USGC?
  +USGC:
  Path 0:
  NA,0,8192,16384,NA
- The range of some parameters is extended respect to LEON-G1 series:
  E.g: <filter_number> in +UUBF, +UDBF commands.
- Some commands support new parameters. In this case these parameters are optional, for backward compatibility.
  E.g.:
  <ec_nr_coeff_real> in +UHFP command.

☞ LARA-R2 / TOBY-R2

- Some parameters present on LEON-G1 series are not available but they are still maintained in the command for backward compatibility. In this case the 'NA' string appears in the information text response to the test command; the NA parameter is not stored in the NVM.
  E.g.:
  AT+USGC?
  +USGC:
  Path 0:
  NA,0,8192,16384,NA
- The range of some parameters is extended respect to LEON-G1 series:
  E.g: <filter_number> in +UUBF, +UDBF commands.
- Some commands support new parameters. In this case these parameters are optional, for backward compatibility.
  E.g.:
  <ec_nr_coeff_real> in +UHFP command.

☞ The speech level is active on call only (no effect on PCM player if not in call).

23.2 Microphone gain (Microphone Gain Control) +UMGC

+UMGC						
Modules	TOBY-L4					
	LARA-R202 LARA-R203 LARA-R211 LARA-R280 TOBY-R2					
	SARA-U2 LISA-U200-01S LISA-U200-02S LISA-U200-03S LISA-U200-52S LISA-U200-62S LISA-U200-83S LISA-U201 LISA-U230 LISA-U260 LISA-U270 LISA-U120 LISA-U130					
	SARA-G340 SARA-G350 SARA-G350-53S LEON-G1					
Attributes	**Syntax**	**PIN required**	**Settings saved**	**Can be aborted**	**Response time**	**Error reference**
	partial	No	Profile	No	-	+CME Error

23.2.1 Description

Configures the uplink path gain.

The command syntax differs between different module series.

See Chapter 23.1 for the position of amplifiers in the audio path.

Not all the paths are supported. Check the allowed <uplink_path_num> values in the test command response.

Any change in the gain on uplink or downlink path impacts on the amount of echo fed back from the speaker to the microphone. This means that performance of EC algorithm could change and parameters could need to be changed to better fit new gain on uplink or downlink path. See the +UHFP command description.

23.2.2 LARA-R2 / TOBY-R2 / SARA-U2 / LISA-U2 / LISA-U1 / SARA-G3 / LEON-G1 syntax

Type	Syntax	Response	Example
Set	AT+UMGC=<uplink_path_num>,<analog_gain>,<digital_gain>	OK	AT+UMGC=1,12,16000 OK
Read	AT+UMGC?	+UMGC: Path <uplink_path_num>: <analog_gain>,<digital_gain> [...] (for all the supported paths) OK	+UMGC: Path 0: 10,9384 Path 1: 12,8192 Path 2: 6,8192 OK
Test	AT+UMGC=?	+UMGC: (list of supported <uplink_path_num>s),(list of supported <analog_gain>s),(list of supported <digital_gain>s) OK	+UMGC: (0-9),(0-14),(0-32767) OK

23.2.3 LARA-R2 / TOBY-R2 / SARA-U2 / LISA-U2 / LISA-U1 / SARA-G3 / LEON-G1 defined values

Parameter	Type	Description
<uplink_path_num>	Number	Specifies the uplink path where the gains must be configured. For uplink paths range and physical meaning, see the product specific section in the Chapter 23.1: • LARA-R2 / TOBY-R2 series - Chapter 23.1.3 • SARA-U2 series - Chapter 23.1.4 • LISA-U2 series - Chapter 23.1.5 • LISA-U120 / LISA-U130 - Chapter 23.1.6 • SARA-G340 / SARA-G350 - Chapter 23.1.7

Parameter	Type	Description
		• LEON-G1 series - Chapter 23.1.8
<analog_gain>	Number	Gain for analog audio front end amplifier: • Range: 0 - 14 (0=0 dB; 14=42 dB; 3 dB/step) ☞ LARA-R2 / TOBY-R2 / SARA-U2 / LISA-U2 The parameter is not available: 'NA' is provided in the test command.
<digital_gain>	Number	Gain for Scal_mic digital amplifier: • Range: 0 - 32767 (8192=0 dB; 32767=12 dB; linear)

23.2.4 TOBY-L4 syntax

Type	Syntax	Response	Example
Set	AT+UMGC=<digital_level_index>	OK	AT+UMGC=90 OK
Read	AT+UMGC?	+UMGC: <digital_level_index> OK	+UMGC: 90 OK
Test	AT+UMGC=?	+UMGC: (list of supported <digital_level_index>es) OK	+UMGC: (0-100) OK

23.2.5 TOBY-L4 defined values

Parameter	Type	Description
<digital_level_index>	Number	Digital gain of scal_i2s_in: • Range: 0 - 100 (0=mute; 100=+6 dB; the step size is 0.5 dB (e.g.: 88 means 0 dB) • The factory-programmed value is 88.

23.2.6 Notes

TOBY-L4

- Controls the digital gain scal_i2s_in of the i2s port (see Chapter 23.1.2) for the currently active audio path mode (i.e. the combination of an audio path and audio profile selected by +USPM). The gain is available for each audio path mode and is stored in NVM.
- When the user selects the audio path mode +USPM, the digital gain scal_i2s_in of the i2s port connected to the audio path for that profile type is used.

LARA-R2 / TOBY-R2 / SARA-U2 / LISA-U2

- <analog_gain> is unused and not mandatory. If not omitted, a value belonging to the range must be provided in the set command. 'NA' is provided in the information text response to the read command.
- The factory-programmed values for all the paths are set to NA (<analog_gain> parameter) and 8192 (<digital_gain>).

LISA-U120 / LISA-U130

- The factory-programmed values are set as follows:
  - Path 0: <analog_gain>=12 and <digital_gain>=8192.
  - Path 1: <analog_gain>=12 and <digital_gain>=8192.
  - Path 2: <analog_gain>=6 and <digital_gain>=8192.
  - Path 4: <analog_gain>=13 and <digital_gain>=8192.

SARA-G340 / SARA-G350

- The factory-programmed values are set as follows:
  - Path 0: <analog_gain>=10 and <digital_gain>=8192.
  - Path 1: <analog_gain>=10 and <digital_gain>=8192.
  - Path 2: <analog_gain>=6 and <digital_gain>=8192.
  - Path 4: <analog_gain>=10 and <digital_gain>=8192.

LEON-G1

- <uplink_path_num>=4 is not supported.
- The factory-programmed values are set as follows:

- Path 0: <analog_gain>=10 and <digital_gain>=9384.
- Path 1: <analog_gain>=12 and <digital_gain>=8192.
- Path 2: <analog_gain>=6 and <digital_gain>=8192.

23.3 Speaker Gain (Speaker Gain Control) +USGC

+USGC						
Modules	TOBY-L4					
	LARA-R202 LARA-R203 LARA-R211 LARA-R280 TOBY-R2					
	SARA-U2 LISA-U200-01S LISA-U200-02S LISA-U200-03S LISA-U200-52S LISA-U200-62S LISA-U200-83S LISA-U201 LISA-U230 LISA-U260 LISA-U270 LISA-U120 LISA-U130					
	SARA-G340 SARA-G350 SARA-G350-53S LEON-G1					
Attributes	**Syntax**	**PIN required**	**Settings saved**	**Can be aborted**	**Response time**	**Error reference**
	partial	No	Profile	No	-	+CME Error

23.3.1 Description

Configures the audio downlink path gain.

The command syntax differs between different module series.

See Chapter 23.1 for the position of amplifiers in the audio path.

Not all the paths are supported, see +USPM command description for the supported paths.

Any change in the gain on uplink or downlink path impacts on the amount of echo fed back from the speaker to the microphone. This means that performance of EC algorithm could change and parameters could need to be changed to better fit new gain on uplink or downlink path. See the +UHFP command description).

23.3.2 LARA-R2 / TOBY-R2 / SARA-U2 / LISA-U2 / LISA-U1 / SARA-G3 / LEON-G1 syntax

Type	Syntax	Response	Example
Set	AT+USGC=<downlink_path_num>[,<SPK_analog_gain>],<HS_analog_gain>,<scal_rec>,<Mix_afe>[,<Gain_out>]	OK	AT+USGC=0,6,6,16000,16000,22000 OK
Read	AT+USGC?	+USGC: Path <downlink_path_num>: <SPK_analog_gain>,<HS_analog_gain>,<scal_rec>, <Mix_afe>,<Gain_Out> [...] (for all the supported path) OK	+USGC: Path 0: 6,6,16000,16000,22000 Path 1: 6,0,8192,16384,10240 Path 3: 0,6,8192,16384,8191 Path 4: 6,6,8192,16384,8191 OK
Test	AT+USGC=?	+USGC: (list of supported <downlink_path_num>s),(list of supported <SPK_analog_gain>s),(list of supported <HS_analog_gain>s),(list of supported <scal_rec>s),(list of supported <Mix_afe>s),(list of supported <Gain_out>s) OK	+USGC: (0-9),(0-6),(0-6),(0-32767),(0-32767),(0-32767) OK

23.3.3 LARA-R2 / TOBY-R2 / SARA-U2 / LISA-U2 / LISA-U1 / SARA-G3 / LEON-G1 defined values

Parameter	Type	Description
<downlinkpath_num>	Number	Specifies the downlink path where the gains must be configured. For downlink paths range and physical meaning, see the product specific section in the Chapter 23.1: • LARA-R2 / TOBY-R2 series - Chapter 23.1.3 • SARA-U2 series - Chapter 23.1.4 • LISA-U2 series - Chapter 23.1.5 • LISA-U120 / LISA-U130 - Chapter 23.1.6 • SARA-G340 / SARA-G350 - Chapter 23.1.7 • LEON-G1 series - Chapter 23.1.8
<SPK_analog_gain>	Number	Gain of analog audio amplifier for SPK_P/SPK_N outputs: • LEON-G1 series - the range goes from 0 to 6 (-3 dB/step; 0=+9 dB to 6=-9 dB) • SARA-G340 / SARA-G350 - the range goes from 0 to 5 (-3 dB/step; 0=+9 dB to 5= -6 dB)
<HS_analog_gain>	Number	Gain of analog audio amplifier for SPK_P/SPK_N outputs: • LISA-U120 / LISA-U130 / LEON-G1 series - the range goes from 0 to 6 (-3 db/step; 0=0 dB to 6= -18 dB)
<scal_rec>	Number	Gain of the Scal_rec digital amplifier (speech and tone generator): • Range: 0 - 32767 (8192=0 dB; 32767=12 dB; linear)
<Mix_afe>	Number	Gains of the Mix_afe digital amplifier (synthesizers): • Range: 0 - 32767 (16384=0 dB; 32767=6 dB; linear)
<Gain_out>	Number	Gain of the Gain_Out digital amplifier (speech): • Range: 0 - 32767 (8192=0 dB; 32767=12 dB; linear)

23.3.4 TOBY-L4 syntax

Type	Syntax	Response	Example
Set	AT+USGC=<digital_level_index>	OK	AT+USGC=90 OK
Read	AT+USGC?	+USGC: <digital_level_index> OK	+USGC: 90 OK
Test	AT+USGC=?	+USGC: (list of supported <digital_level_index>es) OK	+USGC: (0-100) OK

23.3.5 TOBY-L4 defined values

Parameter	Type	Description
<digital_level_index>	Number	Digital gain of the scal_i2s_out: • Range: 0 - 100 (0=mute; 100=+6 dB; the step size is 0.5 dB (e.g.: 88 means 0 dB) • The factory-programmed value is 88.

23.3.6 Notes

TOBY-L4

- Controls the digital gain scal_i2s_out of the i2s port (see Chapter 23.1.2) for the currently active audio path mode (i.e. the combination of an audio path and audio profile selected by +USPM). The gain is available for each audio path mode and is stored in NVM.
- When the user selects the audio path mode with +USPM, the digital gain scal_i2s_out of the i2s port connected to the audio path for that profile type is used.

LARA-R2 / TOBY-R2 / SARA-U2 / LISA-U2

- <SPK_analog_gain>, <HS_analog_gain> and <Gain_out> are unused and not mandatory. If not omitted, a value belonging to the range must be provided in the set command. 'NA' is provided in the information text response to the read command.
- The factory-programmed values are set as follows:

- <SPK_analog_gain> not available for all the paths.
- <HS_analog_gain> not available for all the paths.
- <scal_rec>= 8192 for all the paths.
- <Mix_afe>= 16384 for all the paths.
- <Gain_out> not available for all the paths.

LISA-U1

- <SPK_analog_gain> and <Gain_out> are unused and not mandatory. 'NA' is provided in the test command.
- The factory-programmed values are set as follows:
  - <SPK_analog_gain> not available for all the paths.
  - <HS_analog_gain>= 0 for the path 0, <HS_analog_gain>= 1 for the path 1, <HS_analog_gain>= 0 for the path 3, <HS_analog_gain>= 3 for the path 4.
  - <scal_rec>= 8192 for all the paths.
  - <Mix_afe>= 16384 for all the paths.
  - <Gain_out> not available for all the paths.

SARA-G340 / SARA-G350

- <HS_analog_gain> and <Mix_afe> are unused and not mandatory. 'NA' is provided in the test command.
- The factory-programmed values are set as follows:
  - <SPK_analog_gain>=3 for path 0, 1, 3 and <SPK_analog_gain>=5 for path 4.
  - <HS_analog_gain>=3 for path 0, 1, 3 and <SPK_analog_gain>=0 for path 4.
  - <scal_rec>= 8192 for all the paths.
  - <Mix_afe>= 16384 for all the paths.
  - <Gain_out>= 8192 for all the paths.

LEON-G1

- The factory-programmed values are set as follows:
  - <SPK_analog_gain>=6 for path 0, 1, 4 and <SPK_analog_gain>=0 for path 3.
  - <HS_analog_gain>=1 for path 0, <HS_analog_gain>=0 for path 1, <HS_analog_gain>=6 for path 3 and 4.
  - <scal_rec>= 8192 for all the paths.
  - <Mix_afe>= 16384 for all the paths.
  - <Gain_out>= 8192 for path 0, <Gain_out>= 10240 for path 1, <Gain_out>= 8191 for path 3 and 4.

23.4 Sidetone configuration +USTN

+USTN						
Modules	LARA-R202 LARA-R203 LARA-R211 LARA-R280 TOBY-R2					
	SARA-U2 LISA-U200-01S LISA-U200-02S LISA-U200-03S LISA-U200-52S LISA-U200-62S LISA-U200-83S LISA-U201 LISA-U230 LISA-U260 LISA-U270 LISA-U120 LISA-U130					
	SARA-G340 SARA-G350 SARA-G350-53S LEON-G1					
Attributes	**Syntax**	**PIN required**	**Settings saved**	**Can be aborted**	**Response time**	**Error reference**
	full	No	Profile	No	-	+CME Error

23.4.1 Description

Configure the sidetone gain for a specific downlink path. The sidetone is a part of the user's speech on uplink path that should be listened on downlink path by the user himself to have perception the call is on.

☞ Not all the paths are supported, see +USPM for the supported paths.

☞ See Chapter 23.1 for the position of sidetone gain in the audio path.

23.4.2 Syntax

Type	Syntax	Response	Example
Set	AT+USTN=<downlink_path_num>,<sidetone_gain>	OK	AT+USTN=1,1000 OK

Type	Syntax	Response	Example
Read	AT+USTN?	+USTN: Path <downlink_path_num>: <sidetone_gain> [...] (all the supported paths) OK	+USTN: Path 0: 2249 Path 1: 2249 ..... OK
Test	AT+USTN=?	+USTN: (list of supported <downlink_path_num>s),(list of supported <sidetone_gain>s) OK	+USTN: (0-9),(0-32767) OK

23.4.3 Defined values

Parameter	Type	Description
<downlink_path_num>	Number	Specifies the downlink path where the sidetone must be configured. For downlink paths range and physical meaning, see the product specific section in the Chapter 23.1: • LARA-R2 / TOBY-R2 series - Chapter 23.1.3 • SARA-U2 series - Chapter 23.1.4 • LISA-U2 series - Chapter 23.1.5 • LISA-U120 / LISA-U130 - Chapter 23.1.6 • SARA-G340 / SARA-G350 - Chapter 23.1.7 • LEON-G1 series - Chapter 23.1.8.
<sidetone_gain>	Number	Gain for sidetone digital amplifier: • Range: 0 - 32767: (16384=0 dB; 32767=6 dB; linear) The factory-programmed value is 512 for all the downlink paths.

23.4.4 Notes

LISA-U120 / LISA-U130 / SARA-G340 / SARA-G350

- The factory-programmed value is 512 for the downlink path 0 and 1.
- The factory-programmed value is 0 for the downlink path 3 and 4.

LEON-G1

- The factory-programmed value is 2249 for the downlink path 0 and 1.
- The factory-programmed value is 0 for the downlink path 3 and 4.

23.5 Uplink Digital Filters (Uplink Biquad Filters) +UUBF

+UUBF						
Modules	LARA-R202 LARA-R203 LARA-R211 LARA-R280 TOBY-R2					
	SARA-U2 LISA-U200-01S LISA-U200-02S LISA-U200-03S LISA-U200-52S LISA-U200-62S LISA-U200-83S LISA-U201 LISA-U230 LISA-U260 LISA-U270 LISA-U120 LISA-U130					
	SARA-G340 SARA-G350 SARA-G350-53S LEON-G1					
Attributes	Syntax	PIN required	Settings saved	Can be aborted	Response time	Error reference
	partial	No	Profile	No	-	+CME Error

23.5.1 Description

Sets the digital audio filters parameters for a specific uplink path.

See Chapter 23.1 for the position of the filters in the audio path.

Not all the paths are supported, see +USPM command description for the supported paths.

23.5.2 Syntax

Type	Syntax	Response	Example
Set	AT+UUBF=<uplinkpath_num>,<filter_number>,<a1>,<b1>,<a2>,<b2>,<a0>	OK	AT+UUBF=0,1,-13915,2249,4377,-325,23450 OK
Read	AT+UUBF?	+UUBF: Path <uplinkpath_num>: Filter1: a1:<a1>, b1:<b1>, a2:<a2>, b2:<b2>, a0:<a0> Filter2: a1:<a1>, b1:<b1>, a2:<a2>, b2:<b2>, a0:<a0> Filter3: a1:<a1>, b1:<b1>, a2:<a2>, b2:<b2>, a0:<a0> Filter4: a1:<a1>, b1:<b1>, a2:<a2>, b2:<b2>, a0:<a0> [...] (for all the supported paths) OK	+UUBF: Path 0: Filter1: a1:0, b1:0, a2:0, b2:0, a0:32767 Filter2: a1:0, b1:0, a2:0, b2:0, a0:32767 Filter3: a1:0, b1:0, a2:0, b2:0, a0:32767 Filter4: a1:0, b1:0, a2:0, b2:0, a0:32767 Filter5: a1:0, b1:0, a2:0, b2:0, a0:32767 Filter6: a1:0, b1:0, a2:0, b2:0, a0:32767 Filter7: a1:0, b1:0, a2:0, b2:0, a0:32767 Filter8: a1:0, b1:0, a2:0, b2:0, a0:32767 [repeated for each path] OK
Test	AT+UUBF=?	+UUBF: (list of supported <uplinkpath_num>s),(list of supported <filter_number>s),(list of supported <a1>s),(list of supported <b1>s),(list of supported <a2>s),(list of supported <b2>s),(list of supported <a0>s) OK	+UUBF: (0-9),(1-8),(-32768:32767),(-32768:32767),(-32768:32767),(-32768:32767),(-32768:32767) OK

23.5.3 Defined values

Parameter	Type	Description
<uplink_path_num>	Number	Specifies the uplink path where the digital filters must be configured. For uplink paths range and physical meaning, see the product specific section in the Chapter 23.1: • LARA-R2 / TOBY-R2 series - Chapter 23.1.3 • SARA-U2 series - Chapter 23.1.4 • LISA-U2 series - Chapter 23.1.5 • LISA-U120 / LISA-U130 - Chapter 23.1.6 • SARA-G340 / SARA-G350 - Chapter 23.1.7 • LEON-G1 series - Chapter 23.1.8
<filter_number>	Number	• LARA-R2 / TOBY-R2 series - Four digital biquad filters in cascade are available for each uplink path. See Chapter 23.1.3 for the filter position. Filters 5-8 are used if the I^2S sampling rate is 16 kHz. Filters 1-4 are used if the I^2S sampling rate is other than 16 kHz. • SARA-U2 series - Four digital biquad filters in cascade are available for each uplink path. See Chapter 23.1.4 for the filter position. Filters 5-8 are used if the I^2S sampling rate is 16 kHz. Filters 1-4 are used if the I^2S sampling rate is other than 16 kHz. • LISA-U2 series - Four digital biquad filters in cascade are available for each uplink path. See Chapter 23.1.5 for the filter position. Filters 5-8 are used if the I^2S

Parameter	Type	Description
		sampling rate is 16 kHz. Filters 1-4 are used if the I^2S sampling rate is other than 16 kHz. • LISA-U1 series - Four digital biquad filters in cascade are available for each uplink path. See Chapter 23.1.6 for the filter position. Filters 1-4 are used for Narrow Band speech (8 kHz sampling rate i.e. with HR, FR, EFR, NB-AMR codec). Filters 1-5 are used for Wide Band speech (16 kHz sampling rate i.e. with WB-AMR). The range goes from 1 to 8. • SARA-G340 / SARA-G350 - Two digital biquad filters in cascade are available for each uplink path (Filter1, Filter2). See Chapter 23.1.7 for the filter position. The range goes from 1 to 2. • LEON-G1 series - Two digital biquad filters in cascade are available for each uplink path (Filter1, Filter2). See Chapter 23.1.8 for the filter position. The range goes from 1 to 2.
<a1>,<b1>,<a2>,<b2>,<a0>	Number	Biquad filter coefficients. The range goes from -32768 to 32767. The factory-programmed value for a1, b1, a2 and b2 is 0 and for a0 is 32767.

23.5.4 Notes

The biquad filter transfer function is

$$H(z) = \frac{A_0 + 2A_1 z^{-1} + A_2 z^{-2}}{1 + 2B_1 z^{-1} + B_2 z^{-2}}$$

with coefficients A_0, A_1, A_2, B_1, B_2 in the range -1:1

The command parameters are filter coefficients scaled in the range that goes from -32768 to 32767

- <a1>=32767 * A_1
- <b1>=32767 * B_1
- <a2>=32767 * A_2
- <b2>=32767 * B_2
- <a0>=32767 * A_0

For the computation of the coefficients, consider the corresponding sampling rate for each product (according to speech codec in use, as explained in Chapter 23.1).

Example: set both headset microphone filters to all pass:

In this case the biquad filter transfer function is: H(z)=1

Then the coefficients are

- A0=1
- A1=A2=B1=B2=0

Thus parameters are: <a1>=0, <b1>=0, <a2>=0, <b2>= 0, <a0>=32767

Commands are:

- AT+UUBF=1,1,0,0,0,0,32767
- AT+UUBF=1,2,0,0,0,0,32767

LARA-R2 / TOBY-R2 / SARA-U2 / LISA-U2

- 16 kHz sampling rate for <filter_number>= (5-8). These filters are used if the I^2S sampling rate is 16 kHz.
- Same sampling rate of I^2S in use, for <filter_number>= (1-4). These filters are used if the I^2S sampling rate is other than 16 kHz.

LISA-U120 / LISA-U130

- 8 kHz sampling rate for <filter_number>= (1-4). These filters are used when speech codec is HR, FR, EFR or NB-AMR (speech sampling rate is 8 kHz), thus filters are 'Narrow Band' (0 - 4 kHz).
- 16 kHz sampling rate for <filter_number>= (5-8). These filters are used when speech codec is WB-AMR (speech sampling rate is 16 kHz), thus filters are 'Wide Band' (0 - 8 kHz).

SARA-G340 / SARA-G350 / LEON-G1

- 8 kHz sampling rate. Filters are 'Narrow Band' (0 - 4 kHz)

LEON-G1

- <uplink_path_num>=4 is not supported.
- The factory-programmed values are as follows:
  - Path 0:
    - Filter1: a1=-13915, b1=2249, a2=4377, b2=-325, a0=23450
    - Filter2: a1=21682, b1=-2312, a2=17984, b2=-15517, a0=32767
  - Path 1:
    - Filter1: a1=-29322, b1=-29141, a2=29322, b2=26240, a0=29322
    - Filter2: a1=29322, b1=29141, a2=29322, b2=26240, a0=29322
  - Path 2:
    - Filter1: a1=0, b1=0, a2=0, b2=0, a0=32767
    - Filter2: a1=0, b1=0, a2=0, b2=0, a0=32767

23.6 Downlink Digital Filters (Downlink Biquad Filters) +UDBF

+UDBF						
Modules	LARA-R202 LARA-R203 LARA-R211 LARA-R280 TOBY-R2					
	SARA-U2 LISA-U200-01S LISA-U200-02S LISA-U200-03S LISA-U200-52S LISA-U200-62S LISA-U200-83S LISA-U201 LISA-U230 LISA-U260 LISA-U270 LISA-U120 LISA-U130					
	SARA-G340 SARA-G350 SARA-G350-53S LEON-G1					
Attributes	**Syntax**	**PIN required**	**Settings saved**	**Can be aborted**	**Response time**	**Error reference**
	full	No	Profile	No	-	+CME Error

23.6.1 Description

Configures the digital audio filters parameters for a specific downlink path.

☞ See Chapter 23.1 for the position of the filters in the audio path.

☞ Not all paths are supported, see +USPM command description for the supported paths.

23.6.2 Syntax

Type	Syntax	Response	Example
Set	AT+UDBF=<downlinkpath_num>,<filter_number>,<a1>,<b1>,<a2>,<b2>,<a0>	OK	AT+UDBF=0,1, -13915,2249,4377,-325,23450 OK
Read	AT+UDBF?	+UDBF: Path <downlinkpath_num>: Filter1: a1:<a1>, b1:<b1>, a2:<a2>, b2:<b2>, a0:<a0> Filter2: a1:<a1>, b1:<b1>, a2:<a2>, b2:<b2>, a0:<a0> Filter3: a1:<a1>, b1:<b1>, a2:<a2>, b2:<b2>, a0:<a0> Filter4: a1:<a1>, b1:<b1>, a2:<a2>, b2:<b2>, a0:<a0> [...] (for all the supported paths) OK	+UDBF: Path 0: Filter1: a1:0, b1:0, a2:0, b2:0, a0 :32767 Filter2: a1:0, b1:0, a2:0, b2:0, a0 :32767 Filter3: a1:0, b1:0, a2:0, b2:0, a0 :32767 Filter4: a1:0, b1:0, a2:0, b2:0, a0 :32767 Filter5: a1:0, b1:0, a2:0, b2:0, a0 :32767 Filter6: a1:0, b1:0, a2:0, b2:0, a0 :32767 Filter7: a1:0, b1:0, a2:0, b2:0, a0 :32767

Type	Syntax	Response	Example
			Filter8: a1:0, b1:0, a2:0, b2:0, a0 :32767 [repeated for each path] OK
Test	AT+UDBF=?	+UDBF: (list of supported <downlinkpath_num>s),(list of supported <filter_number>s),(list of supported <a1>s),(list of supported <b1>s),(list of supported <a2>s), (list of supported <b2>s),(list of supported <a0>s) OK	+UDBF: (0-9),(1-8),(-32768:32767), (-32768:32767),(-32768:32767),(-32768:32767),(-32768:32767) OK

23.6.3 Defined values

Parameter	Type	Description
<downlinkpath_num>	Number	Specifies the downlink path where the digital filters must be configured. For downlink paths range and phisical meaning, see the product specific section in the Chapter 23.1: • LARA-R2 / TOBY-R2 series - Chapter 23.1.3 • SARA-U2 series - Chapter 23.1.4 • LISA-U2 series - Chapter 23.1.5 • LISA-U120 / LISA-U130 - Chapter 23.1.6 • SARA-G340 / SARA-G350 - Chapter 23.1.7 • LEON-G1 series - Chapter 23.1.8
<filter_number>	Number	• LARA-R2 / TOBY-R2 series - four digital biquad filters in cascade are available for each downlink path. See the Chapter 23.1.3 for the filter position. Filters 1-4 are used for Narrow Band speech (8 kHz sampling rate i.e. with HR, FR, EFR, NB-AMR codec). Filters 1-5 are used for Wide Band speech (16 kHz sampling rate i.e. with WB-AMR). The range goes from 1 to 8. • SARA-U2 series - four digital biquad filters in cascade are available for each downlink path. See the Chapter 23.1.4 for the filter position. Filters 1-4 are used for Narrow Band speech (8 kHz sampling rate i.e. with HR, FR, EFR, NB-AMR codec). Filters 1-5 are used for Wide Band speech (16 kHz sampling rate i.e. with WB-AMR). The range goes from 1 to 8. • LISA-U2 series - four digital biquad filters in cascade are available for each downlink path. See the Chapter 23.1.5 for the filter position. Filters 1-4 are used for Narrow Band speech (8 kHz sampling rate i.e. with HR, FR, EFR, NB-AMR codec). Filters 1-5 are used for Wide Band speech (16 kHz sampling rate i.e. with WB-AMR). The range goes from 1 to 8. • LISA-U1 series - four digital biquad filters in cascade are available for each downlink path. See the Chapter 23.1.6 for the filter position. Filters 1-4 are used for Narrow Band speech (8 kHz sampling rate i.e. with HR, FR, EFR, NB-AMR codec). Filters 1-5 are used for Wide Band speech (16 kHz sampling rate i.e. with WB-AMR). The range goes from 1 to 8. • SARA-G340 / SARA-G350 series - two digital biquad filters in cascade are available for each uplink path (Filter1, Filter2). See the Chapter 23.1.7 for the filter position. The range goes from 1 to 2. • LEON-G1 series - two digital biquad filters in cascade are available for each uplink path (Filter1, Filter2). See the Chapter 23.1.8 for the filter position. The range goes from 1 to 2.
<a1>,<b1>,<a2>, <b2>,<a0>	Number	Biquad filter coefficient. The range goes from -32768 to 32767. The factory-programmed value for a1, b1, a2 and b2 is 0 and for a0 is 32767.

23.6.4 Notes

The biquad filter transfer function is

$$H(z) = \frac{A_0 + 2A_1 z^{-1} + A_2 z^{-2}}{1 + 2B_1 z^{-1} + B_2 z^{-2}}$$

with coefficients A_0, A_1, A_2, B_1, B_2 in the range -1:1

Command parameters are filter coefficients scaled in the range that goes from -32768 to 32767

- <a1>=32767 * A_1
- <b1>=32767 * B_1
- <a2>=32767 * A_2
- <b2>=32767 * B_2
- <a0>=32767 * A_0

For the computation of the coefficients, consider the following sampling rate for each product (according to speech codec in use, as explained in Chapter 23.1).

Example: set both loudspeaker filters to all pass:

In this case the biquad filter transfer function is: H(z)=1

Then the coefficients are

- A0=1
- A1=A2=B1=B2=0

Thus parameters are: <a1>=0, <b1>=0, <a2>=0, <b2>=0, <a0>=32767

Commands are:

- AT+UDBF=3,1,0,0,0,0, 32767
- AT+UDBF=3,2,0,0,0,0, 32767

LARA-R2 / TOBY-R2 / SARA-U2 / LISA-U2 / LISA-U1

- 8 kHz sampling rate for <filter_number>= (1-4). These filters are used when speech codec is HR, FR, EFR or NB-AMR (speech sampling rate is 8 kHz), thus filters are 'Narrow Band' (0 - 4 kHz).
- 16 kHz sampling rate for <filter_number>= (5-8). These filters are used when speech codec is WB-AMR (speech sampling rate is 16 kHz), thus filters are 'Wide Band' (0 - 8 kHz).

SARA-G340 / SARA-G350

- 8 kHz sampling rate. Filters are 'Narrow Band' (0 - 4 kHz)

LEON-G1

- 8 kHz sampling rate. Filters are 'Narrow Band' (0 - 4 kHz)
- The factory-programmed values are as follows:
  - Path 0:
    - Filter1: a1=0, b1=0, a2=0, b2=0, a0=32767
    - Filter2: a1=0, b1=0, a2=0, b2=0, a0=32767
  - Path 1:
    - Filter1: a1=-29322, b1=-29141, a2=29322, b2=26240, a0=29322
    - Filter2: a1=29322, b1=29141, a2=29322, b2=26240, a0=29322
  - Path 3:
    - Filter1: a1=0, b1=0, a2=0, b2=0, a0=32767
    - Filter2: a1=0, b1=0, a2=0, b2=0, a0=32767
  - Path 4:
    - Filter1: a1=0, b1=0, a2=0, b2=0, a0=32767
    - Filter2: a1=0, b1=0, a2=0, b2=0, a0=32767

23.7 Hands-Free Parameters (Hands-Free Parameters) +UHFP

+UHFP						
Modules	LARA-R202 LARA-R203 LARA-R211 LARA-R280 TOBY-R2					
	SARA-U2 LISA-U200-01S LISA-U200-02S LISA-U200-03S LISA-U200-52S LISA-U200-62S LISA-U200-83S LISA-U201 LISA-U230 LISA-U260 LISA-U270 LISA-U120 LISA-U130					
	SARA-G340 SARA-G350 SARA-G350-53S LEON-G1					
Attributes	**Syntax**	**PIN required**	**Settings saved**	**Can be aborted**	**Response time**	**Error reference**
	partial	No	Profile	No	-	+CME Error

23.7.1 Description

Sets the parameters that control the hands-free audio application for a specific uplink path. The hands-free application consists of:

- Echo Canceller (EC)
- Automatic Gain Control (AGC)
- Noise Reduction (NR)

The corresponding module audio application note describes in detail the HF algorithm tuning.

Any change in the gain on uplink or downlink path impacts on the amount of echo fed back from the speaker to the microphone. This means that performance of Hands-Free / EC algorithm could change and parameters could need to be changed to better fit new gain on uplink or downlink path

The command syntax differs between different module series. In Chapter 23.7.2 and Chapter 23.7.4 the different descriptions are provided.

23.7.2 LEON-G1 syntax

Type	Syntax	Response	Example
Set	AT+UHFP=<uplink_path_num>,<hf_algorithm_init>,<hf_algorithm_restart>,<step_width>,<lms_length>,<lms_offset>,<block_length>,<rxtx_relation>,<add_atten>, <min_atten>,<max_atten>,<nr_sw_2>,<nr_u_fak_0>,<nr_u_fak>	OK	AT+UHFP=1,0x01FD,0x016E,2200,250,3,5,150,0,0,500,4096,16384,16384 OK
Read	AT+UHFP?	+UHFP: Path <uplink_path_num>: HF_algorithm_init:<hf_algorithm_init>, HF_Algorithm_Restart:<hf_algorithm_restart>, Step_Width:<step_width>, LMS_Length:<lms_length>,LMS_Offset:<lms_offset>, Block_Length:<block_length>, RXTX_Relation:<rxtx_relation>, Add_Atten:<add_atten>, Min_Atten:<min_atten>, Max_Atten:<max_atten>, NR_sw_2:<nr_sw_2>,NR_u_fak_0:<nr_u_fak_0>, NR_u_fak:<nr_u_fak> [...] (for all the supported paths) OK	+UHFP: Path 0: HF_algorithm_init:0x01fd, HF_Algorithm_Restart:0x016e, Step_Width:2200, LMS_Length:250, LMS_Offset:3, Block_Length:5, RXTX_Relation:150, Add_Atten:0, Min_Atten:0, Max_Atten:500, NR_sw_2:4096, NR_u_fak_0:16384, NR_u_fak:16384 Path 1: HF_algorithm_init:0x01fd, HF_Algorithm_Restart:0x016e, Step_Width:2200, LMS_Length:250, LMS_Offset:3, Block_Length:5, RXTX_Relation:150, Add_Atten:0, Min_Atten:0, Max_Atten:500, NR_sw_2:4096, NR_u_fak_0:16384, NR_u_fak:16384 Path 2: HF_algorithm_init:0x01fd, HF_Algorithm_Restart:0x016e, Step_Width:2200, LMS_Length:250,

Type	Syntax	Response	Example
			LMS_Offset:8, Block_Length:5, RXTX_Relation:150, Add_Atten:0, Min_Atten:0, Max_Atten:500, NR_sw_2:4096, NR_u_fak_0:16384, NR_u_fak:16384 OK
Test	AT+UHFP=?	+UHFP: (list of supported <uplink_path_num>s),(list of supported <hf_algorithm_init>s),(list of supported <hf_algorithm_restart>s),(list of supported <step_width>s),(list of supported <lms_length>s),(list of supported <lms_offset>s), (list of supported <block_length>s),(list of supported <rxtx_relation>s),(list of supported <add_atten>s),(list of supported <min_atten>s),(list of supported <max_atten>s),(list of supported <nr_sw_2>s),(list of supported <nr_u_fak_0>s),(list of supported <nr_u_fak>s) OK	+UHFP: (0-2),(0x0000-0x01FF),(0x0000-0x01FF),(0:32767),(2:400),(0:400),(2,4,5,8),(-960:+960),(0:960),(0:960),(0:960),(0:32767),(0:16384),(0:16384) OK

23.7.3 LEON-G1 defined values

Parameter	Type	Description
<uplink_path_num>	Number	• 0: handset_mic • 1: headset_mic • 2: I2S_rx
<hf_algorithm_init>	Number	The SWITCH parameter controls the activity and the initialization of the EC, AGC, NR blocks: • Bit #0 set: Echo Canceller (EC) initialization • Bit #1 set: EC restart (without coefficient initialization) • Bit #2 set: EC on • Bit #3 set: EC adaptation on • Bit #4 set: noise reduction initialization • Bit #5 set: noise reduction on • Bit #6 set: noise reduction works with additional AGC • Bit #7 set: automatic Gain Control (AGC) initialization • Bit #8 set: AGC on Setting the bits is not mutually exclusive; more than one bit can be set at the same time. • Range: 0x0000 to 0x01FF (hexadecimal format only) • The factory-programmed value is 0x01fd for all the uplink paths.
<hf_algorithm_restart>	Number	This bit mask allows to restart the activity of the EC, AGC, NR blocks without initialization. For the bit map see the <hf_algorithm_init>. It is used when the algorithm is automatically restarted by the driver (i.e. after an handover) • Range: 0x0000 to 0x01FF (hexadecimal format only) • The factory-programmed value is 0x016e for all the uplink paths.
<step_width>	Number	The higher this value, the faster the echo characteristic gets adapted Limit: <step_width>*<block_length><=2*32767 Range: 0 to 32767 The factory-programmed value is 2200 for all the uplink paths.
<lms_length>	Number	Maximum impulsive response of the FIR filter considered by the adaptive LMS algorithm, in samples. (Max time length: 400*Ts=50 ms) Limit: 2<= <lms_length>+ <lms_offset><=400 (DSP memory limit) Range: 2 to 400

Parameter	Type	Description
		The factory-programmed value is 250 for all the uplink paths.
<lms_offset>	Number	This parameter is used by the LMS adaptation algorithm and indicates the expected delay of the echo after the RX signal, in samples Range: 0 to 400. The factory-programmed value is 3 (for the uplink path 0 and 1) and 8 (for the uplink path 2).
<block_length>	Number	LMS coefficient adaptation block length. The higher this number, the slower but more accurate the adaptation converges Allowed values are: 2, 4, 5, 8 The factory-programmed value is 5 for all the uplink paths.
<rxtx_relation>	Number	Checks the power relation between Rx (loudspeaker) and Tx (microphone) signals to recognize the double talk condition from the echo condition. The system is considered to be in double talk condition when the TX power (mic signal) is higher that the maximum expected echo power: Tx(dB) > Rx (dB) - RxTx(dB) with RxTx(dB)=<rxtx_relation>*3/32 This is the most critical parameter in hands-free. Values typical for handset are in range 50 to 150. For backspeaker: -100 to -400. When in double talk, the adaptation of FIR and AGC are suspended. Range: -960 to 960 The factory-programmed value is 150 for all the uplink paths.
<add_atten>	Number	When AGC decides to attenuate, <add_atten> is added to the calculated attenuation • Attenuation Level(dB)=3/32* <add_atten> • Range: 0 to 960 The factory-programmed value is 0 for all the uplink paths.
<min_atten>	Number	Minimal attenuation of the mic signal allowed for the AGC: • Attenuation Level (dB)=3/32* <min_atten> • Range: 0 to 960 The factory-programmed value is 0 for all the uplink paths.
<max_atten>	Number	Maximal attenuation of the mic signal allowed for the AGC: • Attenuation Level (dB)=3/32* <max_atten> • Range: 0 to 960 The factory-programmed value is 500 for all the uplink paths.
<nr_sw_2>	Number	Max NR attenuation. Linear; 32767 means 1 (0 dB): • Ex. 16384= 0.5 = -6 dB • Range: 0 to 32767 The factory-programmed value is 4096 for all the uplink paths.
<nr_u_fak_0>	Number	Factor of NR in the band 0 (0 Hz - 250 Hz): • Linear; 16384 means 1 (0 dB) • Range: 0 to 16384 The factory-programmed value is 16384 for all the uplink paths.
<nr_u_fak>	Number	Factor of NR in the bands 1 to 7 (250 Hz - 3750 Hz): • Linear; 16384 means 1 (0 dB) • A factor lower than 1 causes a better NR but also speech distortion and lowering of SLR. • Range: 0 to 16384 • The factory-programmed value is 16384 for all the uplink paths.

23.7.4 LARA-R2 / TOBY-R2 / SARA-U2 / LISA-U2 / LISA-U1 / SARA-G3 syntax

Type	Syntax	Response	Example
Set	AT+UHFP=<uplink_path_num>,<hf_algorithm_init>[,<hf_algorithm_restart>[,<step_width>[,<lms_length>[,<lms_offset>[,<block_length>[,<rxtx_relation>]]]]]], <add_atten>,<min_atten>, <max_atten>,<nr_sw_2>,<nr_u_fak_0>,<nr_u_fak>[,<ec_block_length>[,<ec_nr_coeff_	OK	AT+UHFP=1,0x01Fd,,,,,,0,50,450,8000,7000,7000,4,220,220,220,100,100,100 OK

Type	Syntax	Response	Example
	real>[,<ec_nr_coeff_complex1>[,<ec_nr_coeff_complex2>[,<ec_nr_coeff_complex3>[,<ec_nr_coeff_complex4>[,<ec_nr_coeff_complex5>]]]]]]])		
Read	AT+UHFP?	+UHFP: Path <uplink_path_num>: HF_algorithm_init:<hf_algorithm_init>, HF_Algorithm_Restart:NA, Step_Width:NA, LMS_Length:NA, LMS_Offset:NA, Block_Length:NA, RXTX_Relation:NA,Add_Atten:<add_atten>, Min_Atten:<min_atten>, Max_Atten:<max_atten>, NR_sw_2:<nr_sw_2>,NR_u_fak_0:<nr_u_fak_0>, NR_u_fak:<nr_u_fak>, <ec_block_length>,<ec_nr_coeff_real>, <ec_nr_coeff_complex1>,<ec_nr_coeff_complex2>,<ec_nr_coeff_complex3>, <ec_nr_coeff_complex4>,<ec_nr_coeff_complex5> [...] (for all the supported paths) OK	+UHFP: Path 0: HF_algorithm_init:0x01fd, HF_Algorithm_Restart:NA, Step_Width:NA, LMS_Length:NA, LMS_Offset:NA, Block_Length:NA, RXTX_Relation:NA, Add_Atten:0, Min_Atten:0, Max_Atten:500, NR_sw_2:8192, NR_u_fak_0:7500, NR_u_fak:7500, EC_block_length:2, EC_nr_coeff_real:100, EC_nr_coeff_complex1:100, EC_nr_coeff_complex2:100, EC_nr_coeff_complex3:60, EC_nr_coeff_complex4:60, EC_nr_coeff_complex5:60 [...] (for all the supported paths) OK
Test	AT+UHFP=?	+UHFP: (list of supported <uplink_path_num>s),(list of supported <hf_algorithm_init>s),(list of supported <hf_algorithm_restart>s),(list of supported <step_width>s),(list of supported <lms_length>s),(list of supported <lms_offset>s),(list of supported <block_length>s),(list of supported <rxtx_relation>s), (list of supported <add_atten>s), (list of supported <min_atten>s), (list of supported <max_atten>s), (list of supported <nr_sw_2>s),(list of supported <nr_u_fak_0>s),(list of supported <nr_u_fak>s),(list of supported <ec_block_length>s), (list of supported<ec_nr_coeff_real>s),(list of supported <ec_nr_coeff_complex1>s),(list of supported <ec_nr_coeff_complex2>s), (list of supported <ec_nr_coeff_complex3>s),(list of supported <ec_nr_coeff_complex4>s), (list of supported <ec_nr_coeff_complex5>s), OK	+UHFP: (0-9),(0x0000-0x07FF),(0x0000-0x07FF),(0:32767),(2:400),(0:400),(2,4,5,8),(-960:960),(-960:960),(0:960),(0:960),(0:32767),(0:16384),(0:16384),(1,2,4,5,8),(2:2000),(1:1000),(1:1000),(1:1000),(1:1000),(1:1000) OK

23.7.5 LARA-R2 / TOBY-R2 / SARA-U2 / LISA-U2 / LISA-U1 / SARA-G3 defined values

Parameter	Type	Description
<uplink_path_num>	Number	Specifies the uplink path where the hands free parameters must be configured. For uplink paths range and physical meaning, see the product specific section in the chapter introduction: • LARA-R2 / TOBY-R2 - Chapter 23.1.3

Parameter	Type	Description
		• SARA-U2 - Chapter 23.1.4 • LISA-U2 - Chapter 23.1.5 • LISA-U120 / LISA-U130 - Chapter 23.1.6 • SARA-G340 / SARA-G350 - Chapter 23.1.7
<hf_algorithm_init>	Number	The SWITCH parameter controls the activity and initialization of the EC, AGC, NR blocks: • LARA-R2 / TOBY-R2 - Range: 0x0000 to 0x07FF (hexadecimal format only) o Bit #0 set: unused o Bit #1 set: unused o Bit #2 set: Echo Canceller (EC) initialization and on o Bit #3 set: unused o Bit #4 set: unused o Bit #5 set: Noise Reduction initialization and on o Bit #6 set: unused o Bit #7 set: unused o Bit #8 set: Automatic Gain Control (AGC) initialization and on o Bit #9 set: unused o Bit #10 set: Spectral Echo Reduction (SER) initialization and on o The factory-programmed value is 0x0124 for the uplink paths 0,1,2,3 and 0x0524 for the path 4. • SARA-U2 / LISA-U2 - Range: 0x0000 to 0x07FF (hexadecimal format only) o Bit #0 set: unused o Bit #1 set: unused o Bit #2 set: Echo Canceller (EC) initialization and on o Bit #3 set: unused o Bit #4 set: unused o Bit #5 set: Noise Reduction initialization and on o Bit #6 set: unused o Bit #7 set: unused o Bit #8 set: Automatic Gain Control (AGC) initialization and on o Bit #9 set: unused o Bit #10 set: Spectral Echo Reduction (SER) initialization and on o The factory-programmed value is 0x0124 for all the uplink paths. • SARA-U201-04A / SARA-U201-04B / SARA-U201-04X / SARA-U270-04B - Range: 0x0000 to 0x07FF (hexadecimal format only) o Bit #0 set: unused o Bit #1 set: unused o Bit #2 set: Echo Canceller (EC) initialization and on o Bit #3 set: unused o Bit #4 set: unused o Bit #5 set: Noise Reduction initialization and on o Bit #6 set: unused o Bit #7 set: unused o Bit #8 set: Automatic Gain Control (AGC) initialization and on o Bit #9 set: unused o Bit #10 set: Spectral Echo Reduction (SER) initialization and on o The factory-programmed value is 0x0124 for the uplink paths 0,1,2,3 and 0x0524 for the path 4. • LISA-U1 - Range: 0x0000 to 0x07FF (hexadecimal format only) o Bit #0 set: Echo Canceller (EC) initialization o Bit #1 set: EC restart (without coefficient initialization) o Bit #2 set: EC on o Bit #3 set: unused o Bit #4 set: noise reduction initialization o Bit #5 set: noise reduction on o Bit #6 set: unused o Bit #7 set: Automatic Gain Control (AGC) initialization o Bit #8 set: AGC on

Parameter	Type	Description
		o Bit #9 set: dynamic Echo Suppression INIT o Bit #10 set: dynamic Echo Suppression ACTIVE o The factory-programmed value is 0x01fd for all the uplink paths. • SARA-G340 / SARA-G350 - Range: 0x0000 to 0x3FFF (hexadecimal format only) o Bit #0 set: Echo Canceller (EC) initialization o Bit #1 set: EC restart (without coefficient initialization) o Bit #2 set: EC on o Bit #3 set: noise reduction initialization o Bit #4 set: noise reduction on o Bit #5 set: dynamic Echo Suppression INIT o Bit #6 set: dynamic Echo Suppression ACTIVE o Bit #7 set: automatic Gain Control (AGC) initialization o Bit #8 set: AGC on o Bit #9 set: reconfigure o Bit #10 set: unused o Bit #11 set: unused o Bit #12 set: Spectral Echo Reduction (SER) Initialization o Bit #13 set: SER on o The factory-programmed value is 0x31fd for all the uplink paths. Setting the bits is not mutually exclusive; more than one bit can be set at the same time.
<hf_algorithm_restart>	Number	Not Available. 'NA' is provided in the test command In the set command, the range is checked but the value is not used • LARA-R2 / TOBY-R2 / SARA-U2 / LISA-U2 / LISA-U1 - the range goes from 0x0000 to 0x07FF (hexadecimal format only) • SARA-G340 / SARA-G350 - the range goes from 0x0000 to 0x03FF (hexadecimal format only)
<step_width>	Number	Not Available. 'NA' is provided in the test command. • In the set command, the range is checked but the value is not used • Range: 0 to 32767
<lms_length>	Number	Not Available. 'NA' is provided in the test command. • In the set command, the range is checked but the value is not used • Range: 2 to 400
<lms_offset>	Number	Not Available. 'NA' is provided in the test command. • In the set command, the range is checked but the value is not used • Range: 0 to 400
<block_length>	Number	Not Available. 'NA' is provided in the test command. • In the set command, the range is checked but the value is not used • Allowed values: 2, 4, 5, 8
<rxtx_relation>	Number	Not Available. 'NA' is provided in the test command. • In the set command, the range is checked but the value is not used • Range : -960 to 960
<add_atten>	Number	When AGC decides to attenuate, <add_atten> is added to the calculated attenuation. • Range: -960 to 960 • LARA-R2 / TOBY-R2 / SARA-U2 / LISA-U2 - Attenuation Level(dB)=0,2* <add_atten> • LISA-U1 / SARA-G340 / SARA-G350 - Attenuation Level(dB)=0,05* <add_atten> • LARA-R2 / TOBY-R2 / SARA-U201-04A / SARA-U201-04B / SARA-U201-04X / SARA-U270-04B - The factory-programmed value is 0 on the uplink paths 0, 1, 2, 3 and 15 on the path 4. • SARA-U2 / LISA-U2 / SARA-G340 / SARA-G350 - The factory-programmed value is 0 for all the uplink paths. • LISA-U1 - The factory-programmed value is 0 on the uplink path 0, 1 and 2 and 50 on the uplink path 4.
<min_atten>	Number	Minimal attenuation of the mic signal allowed for the AGC. • Range: 0 to 960 • LARA-R2 / TOBY-R2 / SARA-U2 / LISA-U2 - Attenuation Level(dB)=0,2* <min_atten>

Parameter	Type	Description
		• LISA-U1 / SARA-G340 / SARA-G350 - Attenuation Level(dB)=0,05* <min_atten> • LARA-R2 / TOBY-R2 / SARA-U2 / LISA-U2 / SARA-G340 / SARA-G350 - The factory-programmed value is 0 for all the uplink paths. • LISA-U1 - The factory-programmed value is 0 on the uplink path 0, 1 and 2 and 100 on the uplink path 4.
<max_atten>	Number	Maximal attenuation of the mic signal allowed for the AGC. • Range: 0 to 960 • LARA-R2 / TOBY-R2 / SARA-U2 / LISA-U2 - Attenuation Level(dB)=0,2* <max_atten> • LISA-U1 / SARA-G340 / SARA-G350 - Attenuation Level(dB)=0,05* <max_atten> • LARA-R2 / TOBY-R2 - The factory-programmed value is 480 on the uplink paths 0 , 1, 2, 3 and is 191 on path 4. • SARA-U201-04A / SARA-U201-04B / SARA-U201-04X / SARA-U270-04B - The factory-programmed value is 500 on the uplink paths 0, 1, 2, 3 and is 191 on path 4. • SARA-U2 / LISA-U2 / LISA-U1 - The factory-programmed value is 500 for all the uplink paths. • SARA-G340 / SARA-G350 - The factory-programmed value is 588 for all the uplink paths.
<nr_sw_2>	Number	Maximum NR attenuation. Linear; 32767 means 1 (0 dB). • Ex. 16384= 0.5 = -6 dB • Range: 0 to 32767 • LARA-R2 / TOBY-R2 / SARA-U201-04A / SARA-U201-04B / SARA-U201-04X / SARA-U270-04B - The factory-programmed value is 8192 on the uplink paths 0, 1, 2, 3 and is 6000 on path 4. • SARA-U2 / LISA-U2 / LISA-U1 / SARA-G340 / SARA-G350 - The factory-programmed value is 8192 for all the uplink paths.
<nr_u_fak_0>	Number	Factor of NR in the band 0 (0 Hz - 500 Hz). • Linear; 16384 means 1 (0 dB) • Range: 0 to 16384 • LARA-R2 / TOBY-R2 / SARA-U201-04A / SARA-U201-04B / SARA-U201-04X / SARA-U270-04B - The factory-programmed value is 7500 on the uplink paths 0, 1, 2, 3 and is 4500 on path 4. • SARA-U2 / LISA-U2 - The factory-programmed value is 0 for all the uplink paths. • LISA-U1 - The factory-programmed value is 7500 for all the uplink paths. • SARA-G340 / SARA-G350 - The factory-programmed value is 16384 for all the uplink paths.
<nr_u_fak>	Number	Factor of NR in the higher bands (-f > 500 Hz). • Linear; 16384 means 1 (0 dB) • A factor lower than 1 causes a better NR but also speech distortion and lowering of SLR. • Range: 0 to 16384 • LARA-R2 / TOBY-R2 / SARA-U201-04A / SARA-U201-04B / SARA-U201-04X / SARA-U270-04B - The factory-programmed value is 7500 on the uplink paths 0, 1, 2, 3 and is 5000 on path 4. • SARA-U2 / LISA-U2 / LISA-U1 - The factory-programmed value is 7500 for all the uplink paths. • SARA-G340 / SARA-G350 - The factory-programmed value is 16384 for all the uplink paths.
<ec_block_length>	Number	LMS coefficient adaptation block length. The higher this number, the slower but more accurate the adaptation converges. Allowed values are: 1, 2, 4, 5, 8: • LARA-R2 / TOBY-R2 / SARA-U201-04A / SARA-U201-04B / SARA-U201-04X / SARA-U270-04B - The factory-programmed value is 2 for the uplink paths 0, 1, 2, 3 and is 1 for the path 4. • SARA-U2 / LISA-U2 / LISA-U1 / SARA-G340 / SARA-G350 - The factory-programmed value is 2 for all the uplink paths.
<ec_nr_coeff_real>	Number	Number of coefficients of the filter in the sub-band EC, for real sub band (in Narrow Band mode: 0-0.8 kHz in Wide Band mode: 0-0.73 kHz) • LARA-R2 / TOBY-R2 / SARA-U2 / LISA-U2 - Range: 2 to 2000

Parameter	Type	Description
		• LARA-R2 / TOBY-R2 / SARA-U2 / LISA-U2 - The factory-programmed value is 100 for all the uplink paths. • SARA-U201-04A / SARA-U201-04B / SARA-U201-04X / SARA-U270-04B - The factory-programmed value is 100 for the uplink paths 0, 1, 2, 3 and is 150 for the path 4. • LISA-U1 - Range: 2 to 1100 • LISA-U1 - The factory-programmed value is 100 on the uplink path 0, 1 and 2 and 220 on the uplink path 4. • SARA-G340 / SARA-G350 - Range: 0 to 1100 • SARA-G340 / SARA-G350 - The factory-programmed value is 100 for all the uplink paths. The following limits must be considered: • LARA-R2 / TOBY-R2 - <ec_nr_coeff_real>+2*(<ec_nr_coeff_complex1>+<ec_nr_coeff_complex2> +<ec_nr_coeff_complex3>+ <ec_nr_coeff_complex4>+<ec_nr_coeff_complex5>) <2000 • SARA-U2 / LISA-U2 / LISA-U1 - <ec_nr_coeff_real>+2*(<ec_nr_coeff_complex1> +<ec_nr_coeff_complex2> +<ec_nr_coeff_complex3>+ <ec_nr_coeff_complex4> +<ec_nr_coeff_complex5>) <2000 • SARA-G340 / SARA-G350 - <ec_nr_coeff_real>+2*(<ec_nr_coeff_complex1>+<ec_nr_coeff_complex2>) <1100
<ec_nr_coeff_complex1>	Number	Number of coefficients of the filter in the sub-band EC, for complex sub band 1 (in Narrow Band mode: 0.8-2.4 kHz; in Wide Band mode: 0.73-2.18 kHz) • SARA-G340 / SARA-G350 - Range: 0 to 1100 • SARA-G340 / SARA-G350 - The factory-programmed value is 100 for all the uplink paths. • LARA-R2 / TOBY-R2 / SARA-U2 / LISA-U2 - Range: 1 to 1000 • LARA-R2 / TOBY-R2 / SARA-U2 / LISA-U2 - The factory-programmed value is 100 for all the uplink paths. • SARA-U201-04A / SARA-U201-04B / SARA-U201-04X / SARA-U270-04B - The factory-programmed value is 100 for the uplink paths 0, 1, 2, 3 and is 150 for the path 4. • LISA-U1 - Range: 1 to 1100 • LISA-U1 - The factory-programmed value is 100 on the uplink path 0, 1 and 2 and 220 on the uplink path 4. See the <ec_nr_coeff_real> parameter description for the limit value.
<ec_nr_coeff_complex2>	Number	Number of coefficients of the filter in the sub-band EC, for complex sub band 2 (in Narrow Band mode: 2.4-4 kHz; in Wide Band mode: 2.18-3.64 kHz) • SARA-G340 / SARA-G350 - Range: 0 to 1100 • SARA-G340 / SARA-G350 - The factory-programmed value is 100 for all the uplink paths. • LARA-R2 / TOBY-R2 / SARA-U2 / LISA-U2 - Range: 1 to 1000 • LARA-R2 / TOBY-R2 / SARA-U2 / LISA-U2 - The factory-programmed value is 100 for all the uplink paths. • SARA-U201-04A / SARA-U201-04B / SARA-U201-04X / SARA-U270-04B - The factory-programmed value is 100 for the uplink paths 0, 1, 2, 3 and is 150 for the path 4. • LISA-U1 - Range: 1 to 1100 • LISA-U1 - The factory-programmed value is 100 on the uplink path 0, 1 and 2 and 220 on the uplink path 4. See the <ec_nr_coeff_real> parameter description for the limit value.
<ec_nr_coeff_complex3>	Number	Number of coefficients of the filter in the sub-band EC, for complex sub band 3 (in Narrow Band mode: ignored; in Wide Band mode: 3.64-5.09 kHz) • LARA-R2 / TOBY-R2 / SARA-U2 / LISA-U2 - Range: 1 to 1000 • LARA-R2 / TOBY-R2 - The factory-programmed value is 60 on the uplink paths 0, 1,2,3 and is 100 on path 4. • SARA-U2 / LISA-U2 / LISA-U1 - The factory-programmed value is 60 for all the uplink paths. • SARA-U201-04A / SARA-U201-04B / SARA-U201-04X / SARA-U270-04B - The factory-programmed value is 60 for the uplink paths 0, 1, 2, 3 and is 136 for the path 4. • LISA-U1 - Range: 1 to 1100

Parameter	Type	Description
		On SARA-G340 / SARA-G350 series the parameter is not in use and is set to its default/factory-programmed value (0). See the <ec_nr_coeff_real> parameter description for the limit value.
<ec_nr_coeff_complex4>	Number	Number of coefficients of the filter in the sub-band EC, for complex sub band 4 (in Narrow Band mode: ignored; in Wide Band mode: 5.09-6.56 kHz) • LARA-R2 / TOBY-R2 / SARA-U2 / LISA-U2 - Range: 1 to 1000 • LARA-R2 / TOBY-R2 - The factory-programmed value is 60 on the uplink paths 0, 1, 2, 3 and is 100 on path 4. • SARA-U201-04A / SARA-U201-04B / SARA-U201-04X / SARA-U270-04B - The factory-programmed value is 60 for the uplink paths 0, 1, 2, 3 and is 136 for the path 4. • SARA-U2 / LISA-U2 / LISA-U1 - The factory-programmed value is 60 for all the uplink paths. • LISA-U1 - Range: 1 to 1100 On SARA-G340 / SARA-G350 series the parameter is not in use and is set to its default/factory-programmed value (0). See the <ec_nr_coeff_real> parameter description for the limit value.
<ec_nr_coeff_complex5>	Number	Number of coefficients of the filter in the sub-band EC, for complex sub band 5 (in Narrow Band mode: ignored; in Wide Band mode: 6.56-8 kHz) • LARA-R2 / TOBY-R2 / SARA-U2 / LISA-U2 - Range: 1 to 1000 • LISA-U1 - Range: 1 to 1100 • LARA-R2 / TOBY-R2 - The factory-programmed value is 60 on the uplink paths 0, 1, 2, 3 and is 100 on path 4. • SARA-U201-04A / SARA-U201-04B / SARA-U201-04X / SARA-U270-04B - The factory-programmed value is 60 for the uplink paths 0, 1, 2, 3 and is 136 for the path 4. • SARA-U2 / LISA-U2 / LISA-U1 - The factory-programmed value is 60 for all the uplink paths. On SARA-G340 / SARA-G350 series the parameter is not in use and is set to its default/factory-programmed value (0). See the <ec_nr_coeff_real> parameter description for the limit value.

23.7.6 Notes

LARA-R2 / TOBY-R2 / SARA-U2 / LISA-U2 / LISA-U1 / SARA-G340 / SARA-G350

- Parameters <ec_nr_coeff_complex3>, <ec_nr_coeff_complex4> and <ec_nr_coeff_complex5> are used only in Wide Band speech (16 kHz sampling rate i.e. with WB-AMR codec) and ignored in Narrow Band speech (8 kHz sampling rate i.e. with HR, FR, EFR, NB-AMR codec). For the supported speech codec see notes in Chapter 23.1.
- Not all paths are supported, see +USPM for the supported paths.
- <hf_algorithm_restart>, <step_width>, <lms_length>, <lms_offset>, <block_length>, <rxtx_relation> parameters are maintained for back compatibility with LEON-G series; they are not used and optional.
- Examples:
  - SWITCH =0x01FD =bin 000111111101 means EC initialized and on, Noise reduction initialized and on, Automatic Gain Control initialized and on
  - SWITCH =0x0000 means EC, AGC and NR all off.

LARA-R2 / TOBY-R2 / SARA-U201-04A / SARA-U201-04B / SARA-U201-04X / SARA-U270-04B

- Parameters for <uplink_path_num>=0, 1, 2, 3 are indicated for using in a handset or headset device.
- Default parameters for <uplink_path_num>=4 are indicated for using in a speakerphone device. Select <uplink_path_num> by +USPM command.

SARA-G350

- Parameters <ec_block_length> and <ec_nr_coeff_real> are mandatory.

LEON-G1

- Examples:
  - SWITCH =0x01FD =bin 000111111101 means EC initialized and on, EC adaptation on, noise reduction initialized and on, Automatic Gain Control initialized and on, used with NR.

- SWITCH =0x016E =bin 000101101110 means EC on, EC adaptation on, EC restart noise reduction on, Automatic Gain Control on and working with NR.
- SWITCH =0x0000 means EC, AGC and NR all off.
- Calculation of <lms_offset>;
  Sample period T= 1/8000 s= 125 µs Loudspeaker to mic distance on a phone: L= 10 cm

  Sound velocity V=340 m/s Delay of echo: D =L/V = 0.1/ 340 = 294 µs

  Number of samples=D/T= 2.35 --> LMS_OFFSET =2

23.8 Audio parameters tuning +UAPT

+UAPT						
Modules	TOBY-L200-02S TOBY-L200-03A TOBY-L200-03S TOBY-L210-02S TOBY-L210-03A TOBY-L210-03S TOBY-L210-62S TOBY-L220-02S TOBY-L280					
Attributes	**Syntax**	**PIN required**	**Settings saved**	**Can be aborted**	**Response time**	**Error reference**
	partial	No	Profile	No	-	+CME Error

23.8.1 Description

Audio signals are processed by signal processing blocks available on the audio paths (see block diagram in TOBY-L2 series audio paths).

Each signal processing block (e.g.: Echo Cancellation, Residual Echo Suppression) is characterized by a set of audio parameters.

The command provides an interface for tuning the audio parameters and performs these tasks:

- **Reload** (<op_code>=0): the voice parameters and configuration are retrieved from the module memory into the signal processing blocks in the DSP. This operation can take place both in voice idle or active states.
- **Get processing block identifiers** (<op_code>=5): queries the available/existing blocks and their enable state in the affected audio path. The related information text response returns the processing block identifiers and the corresponding enable-state for each available block.
- **Modify a processing block state** (<op_code>=6): modifies the state of a processing block in a requested input or output audio path with a new value.
- **Get parameters list** (<op_code>=7): queries the parameter values in a requested input or output audio path, processing block and rate (8 kHz or 16 kHz). The related information text response returns a list which includes the parameter values.
- **Modify parameters** (<op_code>=8): modifies parameters (one or more) of a processing block with new values.
- **Modify parameters** (<op_code>=11): enables/disables the parameters range check when entering "Modify parameters" command.

23.8.2 Syntax

Type	Syntax	Response	Example
Generic syntax			
Set	AT+UAPT=<op_code>[,<param1>,<param2>,<param3>[,<param4>,<param5>[,<param6>,<param7>,<param8>,...]]]	OK	AT+UAPT=8,0,0,1,3,0,0,7,1,4096,0,0,4096,0,0 OK
Load audio parameters			
Set	AT+UAPT=0	OK	AT+UAPT=0 OK
Get processing blocks states			
Set	AT+UAPT=5,<profile>,<app>,<direction>	+UAPT: <blockID>,<enableState> [...] (for all the supported block identifier on current profile, path) OK	AT+UAPT=5,3,0,0 +UAPT: 2,1 3,0 4,1

Type	Syntax	Response	Example
			5,1 6,1 7,1 OK
Modify processing block state			
Set	AT+UAPT=6,<profile>,<app>,<direction>,<blockID>,<enableState>	OK	AT+UAPT=6,0,0,1,3,0 OK
Get parameters list			
Set	AT+UAPT=7,<profile>,<app>,<direction>,<blockID>,<rate>	+UAPT: <parameterOffset>,<paramValue> [...] (for all the supported parameters in the requested <blockID>) OK	AT+UAPT=7,0,0,1,3,0 +UAPT: 0,1 1,4096 2,0 3,0 4,4096 5,0 6,0 OK
Modify parameters			
Set	AT+UAPT=8,<profile>,<app>,<direction>,<blockID>,<rate>,<parameterOffset>,<numOfParams>,<newValue1>[,<newValue2>,<newValue3>, ..]	OK	AT+UAPT=8,0,0,1,3,0,0,7,1,4096,0,0,4096,0,0 OK
Enable/disable parameters range check			
Set	AT+UAPT=11,<enableCheck>	OK	AT+UAPT=11,0 OK
Read	AT+UAPT=11	+UAPT:11,<enableCheck> OK	AT+UAPT=11 +UAPT: 11,1 OK
Test	AT+UAPT=?	+UAPT: 0 +UAPT: 5,(list of supported <profile>'s),(list of supported <app>'s),(list of supported <direction>'s) +UAPT: 6,(list of supported <profile>'s),(list of supported <app>'s),(list of supported <direction>'s),(list of supported <blockID>'s),(list of supported <enableState>'s) +UAPT: 7,(list of supported <profile>'s),(list of supported <app>'s),(list of supported <direction>'s),(list of supported <blockID>'s),(list of supported <rate>'s) +UAPT: 8,(list of supported <profile>'s),(list of supported <app>'s),(list of supported <direction>'s),(list of supported <blockID>'s),(list of supported <rate>'s),(list of supported <parameterOffset>'s),(list of	AT+UAPT=? +UAPT: 0 +UAPT: 5,(0-4),(0),(0-1) +UAPT: 6,(0-4),(0),(0-1),(0-8),(0-1) +UAPT: 7,(0-4),(0),(0-1),(0-8),(0-1) +UAPT: 8,(0-4),(0),(0-1),(0-8),(0-1),(0-30),(1-31),(-32768:32767),... +UAPT: 11,(0,1) OK

Type	Syntax	Response	Example
		supported <numOfParams>'s),(list of supported <newValue1>'s),... +UAPT: 11,(list of supported <enableCheck>'s) OK	

23.8.3 Defined values

Parameter	Type	Description
<op_code>	Number	Allowed values: • 0 ("reloads"): reloads voice parameters and configurations from the memory. • 5 ("get list of available processing blocks identifiers and their state"): queries available/existing blocks and their state (enable/disabled) in a given profile and application pair and a given path (RX or TX) • 6 ("modify a processing state"): modifies block's state (enable/disable) in a profile and application pair element with a new value. • 7 ("get parameters value list"): queries the parameter values in a requested profile and application pair element and a given path, moduleID and rate (8 kHz or 16 kHz). • 8 ("modify block's parameters value"): modifies processing block parameters (1 or more) with new values. • 11 ("parameters range check"): enables/disables parameters range check when entering "modify block's parameters value" command (<op_code>=8).
<profile>	Number	Acoustic profile. It identifies the set of parameters loaded from memory in the speech processing blocks when an audio path is enabled. See <main_uplink>, <main_downlink> description in +USPM AT command.
<app>	Number	Application. Allowed value: • 0: speech
<direction>	Number	Audio path direction. Allowed values: • 0: TX path (input) • 1: RX path (output)
<blockID>	Number	Signal processing block identifier. (See block diagram in TOBY-L2 series audio paths). Allowed values: • 0: Echo Cancellation ("EC") • 1: Residual Echo Suppression ("RES") • 2: Noise Suppression ("NS") • 3: Low Pass Filter ("LPF") • 4: High Pass Filter ("HPF") • 5: Equalizer ("EQU") • 6: Additional Gain Control ("AGC") • 7: Dynamic Range Compression ("DRC") • 8: Microphone Levels ("ML")
<enableState>	Number	State. Allowed values: • 0: processing block state is disabled • 1: processing block state is enabled
<rate>	Number	Rate. Allowed values: • 0: 8 kHz • 1: 16 kHz
<parameterOffset>	Number	Offset of the affected parameter
<numOfParams>	Number	Number of affected parameters, starting from the one specified by <parameterOffset>.
<paramValue> <newValue1> <newValue2> [...]	Number	Value of parameter. See TOBY-L2 Audio Application Note [118] for the ranges and default values of parameters.
<enableCheck>	Number	Enable/disable parameters value check. Allowed values: • 0: disabled, parameters range is not checked; only values between -32767 and +32767 are allowed • 1: (default value) enabled

23.8.4 Notes

TOBY-L200-02S / TOBY-L210-02S / TOBY-L210-62S / TOBY-L220-02S / TOBY-L280-02S

- <op_code>=11 is not supported.

TOBY-L200-03S / TOBY-L210-03A / TOBY-L210-03S / TOBY-L280-03S

- <op_code>=11 is not supported by TOBY-L200-03S-00, TOBY-L210-03S-00, TOBY-L210-03A-00, TOBY-L280-03S-00.

23.9 Audio parameters tuning +UTI

+UTI						
Modules	TOBY-L4					
	SARA-U201-04A SARA-U201-04B SARA-U201-04X SARA-U270-04B					
Attributes	**Syntax**	**PIN required**	**Settings saved**	**Can be aborted**	**Response time**	**Error reference**
	partial	No	Profile	No	-	-

23.9.1 Description

Provides an interface for tuning the full set of parameters of the speech enhancement system, configurable for each supported audio path.

See the speech enhancement system diagrams in

- SARA-U201 "04" product versions - Speech processing blocks and audio paths
- TOBY-L4 series - Speech processing blocks and audio paths

The Extended Audio Tuning Application Note is available on request.

23.9.2 Syntax

Type	Syntax	Response	Example
Set	AT+UTI=<cmd_string>	OK	AT+UTI="uhfpw:0" OK

23.9.3 Defined values

Parameter	Type	Description
<cmd_string>	String	Product specific UTI command string.

23.10 Volume gain control +UVGC

+UVGC						
Modules	TOBY-L200-02S TOBY-L200-03A TOBY-L200-03S TOBY-L210-02S TOBY-L210-03A TOBY-L210-03S TOBY-L210-62S TOBY-L220-02S TOBY-L280					
Attributes	**Syntax**	**PIN required**	**Settings saved**	**Can be aborted**	**Response time**	**Error reference**
	full	No	Profile	No	-	+CME Error

23.10.1 Description

Sets the gain of the uplink and downlink path and the sidetone (feedback from uplink to downlink path) on the external voice codec Maxim MAX9860, if connected.

⚠ Any change in the gain on uplink or downlink path impacts on the amount of echo fed back from the speaker to the microphone. This means that the EC algorithm performance could change and the parameters could need to be changed to better fit the new gain on uplink or downlink path. See the +UAPT command description).

23.10.2 Syntax

Type	Syntax	Response	Example
Set	AT+UVGC=<componentID>,<gainID>,<gainValue>	OK	AT+UVGC=0,2,30 OK

Type	Syntax	Response	Example
Read	AT+UVGC=<componentID>,<gainID>	+UVGC: <gainApplied> OK	AT+UVGC=0,3 +UVGC: 4 OK
Test	AT+UVGC=?	+UVGC: (list of supported <componentID>'s),(list of supported <gainID>'s),(list of supported <gainValue>'s) OK	+UVGC: (0),(0-3),(-99999:+99999) OK

23.10.3 Defined values

Parameter	Type	Description
<componentID>	Number	0: external codec Maxim MAX9860
<gainID>	Number	See Table 73 for the allowed gain control.
<gainValue>	Number	See Table 73 for the allowed gain value available on each gain control. The range goes from -99999 to +99999
<gainApplied>	Number	See Table 73 for the applied gain values corresponding to each gain control. The values is expressed in dB.

23.10.4 Notes

In Table 73 the name of the gain controls refer to the Maxim MAX9860 voice codec datasheet.

<gainID>	Gain control name	<gainApplied>
0	DVA (DAC Level Adjust on Maxim MAX9860 codec)	Resolution: 1 dB/step. The default and factory-programmed value is -5 dB Mute if <gainValue> < -90 3 dB if <gainValue> > 3 <gainValue> dB otherwise
1	DVST (Sidetone Level on Maxim MAX9860 codec)	Resolution: 2 dB/step. The default and factory-programmed value is OFF OFF if <gainValue> < -60 0 dB if <gainValue> > 0 <gainValue> rounded to higher even number (dB), otherwise
2	PAM (Microphone Preamplifier on Maxim MAX9860 codec)	The default and factory-programmed value is 20 dB OFF if 0 < <gainValue> 0 dB if 0 =< <gainValue> < 10 20 dB if 10 =< <gainValue> < 25 30 dB if <gainValue> >= 25
3	PGAM (Microphone Amplifier on Maxim MAX9860 codec)	Resolution: 1 dB/step. The default and factory-programmed value is 4 dB 0 dB if <gainValue> < 0 20 dB if <gainValue> > 20 <gainValue> dB otherwise

Table 73: Gain controls

See the block diagram in Figure 23 for position of controls in the audio chain.

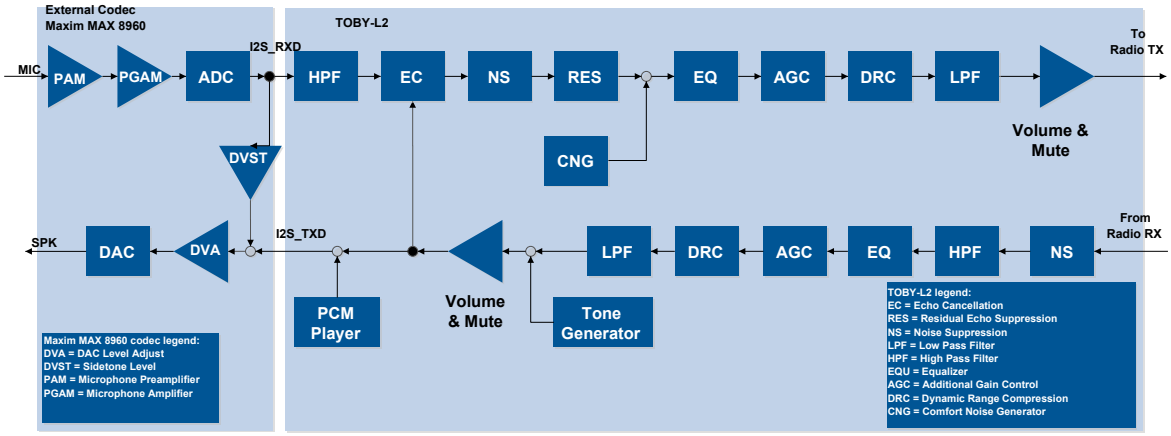

Figure 23: External codec controls

23.11 Microphone analog and digital gains +UMAFE

+UMAFE						
Modules	TOBY-L4					
Attributes	**Syntax**	**PIN required**	**Settings saved**	**Can be aborted**	**Response time**	**Error reference**
	full	No	NVM	No	-	+CME Error

23.11.1 Description

Controls the microphone analog and digital gains for the currently active audio path mode. The gains are available for each analog profile type and are stored in NVM.

When the user selects the profile type with +USPM, the microphone gains for that profile type are used.

23.11.2 Syntax

Type	Syntax	Response	Example
Set	AT+UMAFE=<analog_gain>,<adc_gain>	OK	AT+UMAFE=10,4 OK
Read	AT+UMAFE?	+UMAFE: <analog_gain>,<adc_gain> OK	+UMAFE: 0,2 OK
Test	AT+UMAFE=?	+UMAFE: (list of supported <analog_gain>s),(list of supported <adc_gain>s) OK	+UMAFE: (0-26),(0-7) OK

23.11.3 Defined values

Parameter	Type	Description
<analog_gain>	Number	The range goes from 0 to 26. The factory-programmed value is 0. 0 means 0 dB, 26 means 39 dB and the step size is 1.5 dB (e.g.: 20 means 30 dB).
<adc_gain>	Number	The range goes from 0 to 7. The factory-programmed value is 2. 0 means -6 dB, 7 means 15 dB and the step size is 3 dB (e.g.: 2 means 0 dB).

23.11.4 Notes

- If the command is issued when the active audio path selected by +USPM AT command is not analog, the command returns with "+CME ERROR: operation not allowed" error result code (if +CMEE is set to 2).

23.12 Speaker analog and digital gains +USAFE

+USAFE						
Modules	TOBY-L4					
Attributes	**Syntax**	**PIN required**	**Settings saved**	**Can be aborted**	**Response time**	**Error reference**
	full	No	NVM	No	-	+CME Error

23.12.1 Description

Controls speaker analog and digital gains for the currently active audio path mode. The gains are available for each analog profile type and are stored in NVM.

When the user selects the profile type with +USPM, the speaker gains for that profile type are used.

23.12.2 Syntax

Type	Syntax	Response	Example
Set	AT+USAFE=<earpiece_gain>,<dac_coarse_gain>,<dac_fine_gain>	OK	AT+USAFE=4,4,3 OK
Read	AT+USAFE?	+USAFE: <earpiece_gain>,<dac_coarse_gain>,<dac_fine_gain> OK	+USAFE: 4,4,3 OK
Test	AT+USAFE=?	+USAFE: (list of supported <earpiece_gain>s),(list of supported <dac_coarse_gain>s),(list of supported <dac_fine_gain>s) OK	+USAFE: (0-8),(0-6),(0-3) OK

23.12.3 Defined values

Parameter	Type	Description
<earpiece_gain>	Number	The range goes from 0 to 8. The factory-programmed value is 4 (0 dB). 0 means -12 dB, 8 means 12 dB and the step size is 3 dB.
<dac_coarse_gain>	Number	The range goes from 0 to 6. The factory-programmed value is 4 (0 dB). 0 means mute, 6 means 12 dB and the step size is 6 dB (e.g.: 2 means -12 dB).
<dac_fine_gain>	Number	The range goes from 0 to 3. The factory-programmed value is 3 (0 dB). 0 means -4.5 dB, 3 means 0 dB and the step size is 1.5 dB (e.g.: 2 means -1.5 dB).

23.12.4 Notes

- If command is issued when active audio path selected by +USPM is not analog, the command returns with error "+CME ERROR: operation not allowed" (if +CMEE is set to 2).

23.13 Microphone select +UMSEL

+UMSEL						
Modules	TOBY-L4					
Attributes	**Syntax**	**PIN required**	**Settings saved**	**Can be aborted**	**Response time**	**Error reference**
	full	No	NVM	No	-	+CME Error

23.13.1 Description

Allows the configuration of the active microphone for audio front ends (analog or digital paths) supporting 2 microphones.

The command selects the microphone of the active audio path, configured by means of the +USPM AT command.

23.13.2 Syntax

Type	Syntax	Response	Example
Set	AT+UMSEL=<mic_id>	OK	AT+UMSEL=1 OK
Read	AT+UMSEL?	+UMSEL: <mic_id> OK	+UMSEL: 1 OK
Test	AT+UMSEL=?	+UMSEL: (list of supported <mic_id>s) OK	+UMSEL: (1-2) OK

23.13.3 Defined values

Parameter	Type	Description
<mic_ic>	Number	Specifies microphones to use on active path. Allowed and default values for **<mic_id>** parameter for each audio path: • **Analog path**: o 1 (factory-programmed value): AMIC1 selected o 2: AMIC2 selected • **Digital path**: o Command not allowed

24 DNS

DNS service requires the user to define and activate a connection profile, either PSD or CSD.

☞ TOBY-L2 / MPCI-L2 / LARA-R2 / TOBY-R2 / SARA-U2 / LISA-U2 / LISA-U1 / SARA-G4 / SARA-G3 / LEON-G1
See +UPSD, +UPSDA and +UPSND AT commands for establishing a PSD connection.

☞ SARA-G3 / LEON-G1
See +UCSD, +UCSDA and +UCSND AT commands for establishing a CSD connection.

When these command report an error which is not a +CME ERROR, the error class and code is provided through +USOER AT command.

24.1 Resolve name / IP number through DNS +UDNSRN

+UDNSRN						
Modules	TOBY-L200-02S TOBY-L200-03A TOBY-L200-03S TOBY-L201 TOBY-L210-02S TOBY-L210-03A TOBY-L210-03S TOBY-L210-62S TOBY-L220 TOBY-L280 MPCI-L200-02S MPCI-L200-03S MPCI-L201 MPCI-L210-02S MPCI-L210-03S MPCI-L220 MPCI-L280					
	LARA-R2 TOBY-R2					
	SARA-U2 LISA-U2 LISA-U1					
	SARA-G4 SARA-G340 SARA-G350 SARA-G350-53S LEON-G1					
Attributes	**Syntax**	**PIN required**	**Settings saved**	**Can be aborted**	**Response time**	**Error reference**
	full	No	No	No	< 120 s	TCP/UDP/IP Error

24.1.1 Description

Translates a domain name to an IP address or an IP address to a domain name by using an available DNS. There are two available DNSs, primary and secondary. The network usually provides them after a GPRS activation or a CSD establishment. They are automatically used in the resolution process if available. The resolver will use first the primary DNS, otherwise if there is no answer, the second DNS will be involved.

☞ TOBY-L2 / MPCI-L2 / LARA-R2 / TOBY-R2 / SARA-U2 / LISA-U2 / LISA-U1 / SARA-G4 / SARA-G3 / LEON-G1
The user can replace each network provided DNS by setting its own DNS for a PSD context by means of the +UPSD AT command. If a DNS value different from "0.0.0.0" is provided, the user DNS will replace the correspondent network-provided one. Usage of the network provided DNSs is recommended.

☞ SARA-G3 / LEON-G1
The user can replace each network provided DNS by setting its own DNS for a CSD context by means of the +UCSD AT command. If a DNS value different from "0.0.0.0" is provided, the user DNS will replace the correspondent network-provided one. Usage of the network provided DNSs is recommended.

☞ The DNS resolution timeout depends on the number of DNS servers available to the DNS resolution system. The response time for the DNS resolution is estimated in case 8 servers are used to perform this task.

☞ Pay attention to the DNS setting for the different profiles since the user DNS can be put into action if the corresponding profile is activated (if the user sets a DNS for a profile, and a different profile is activated, the user DNS has no action and the network DNS is used if available).

24.1.2 Syntax

Type	Syntax	Response	Example
Set	AT+UDNSRN=<resolution_type>,<domain_ip_string>[,<async>]	+UDNSRN: <resolved_ip_address> OK or +UDNSRN: <resolved_domain_name> OK	AT+UDNSRN=0,"www.google.com" +UDNSRN: "216.239.59.147" OK
			AT+UDNSRN=0,"www.google.com",1 OK +UUDNSRN: "216.239.59.147"
			AT+UDNSRN=0,"www.google.com",0

Type	Syntax	Response	Example
			+UDNSRN: "216.239.59.147" OK
URC		+UUDNSRN: <result_code>[, <resolved_ip_address>]	+UUDNSRN: 0,"216.239.59.147"
		+UUDNSRN: <result_code>[, <resolved_domain_name>]	+UUDNSRN: 0,"somedomain.com"
		+UUDNSRN: -1	+UUDNSRN: -1

24.1.3 Defined values

Parameter	Type	Description
<resolution_type>	Number	Type of resolution operation: • 0: domain name to IP address • 1: IP address to domain name (host by name)
<domain_ip_string>	String	Domain name (<resolution_type>=0) or the IP address in (<resolution_type>=1) to be resolved
<async>	Number	Asynchronous DNS resolution flag. Allowed values: • 0 (default value): the final result code is returned only once the DNS response is available, locking the AT interface until the DNS activity is running • 1: a final result code (OK or an error result code) is returned immediately unlocking the AT interface and making it available for the execution of other AT commands. Once the result of DNS resolution becomes available, it is notified to the AT interface through the +UUDNSRN URC
<resolved_ip_address>	String	Resolved IP address corresponding to the specified domain name
<resolved_domain_name>	String	Resolved domain name corresponding to the provided IP address
<result_code>	Number	Result code of DNS resolution: • 0: no error • -1: DNS resolution failed. In this case the <resolved_ip_address> or the <resolved_domain_name> fields are not present

24.1.4 Notes

TOBY-L2 / MPCI-L2 / LARA-R2 / TOBY-R2 / SARA-U201-03A / SARA-U201-03B / SARA-U201-03X / SARA-U201-63B / SARA-U260 / SARA-U270-00S / SARA-U270-00X / SARA-U270-03A / SARA-U270-03S / SARA-U270-53S / SARA-U270-73S / SARA-U280 / LISA-U2 / LISA-U1 / SARA-G3 / LEON-G1

- The <async> parameter and the +UUDNSRN URC are not available.

SARA-G4

- The <async> parameter and the +UUDNSRN URC are not available.
- <resolution_type>=1 is not supported.
- The information text response to the set command provide also the resolution operation as follow: +UDNSRN: <resolution_type>,<resolved_ip_address>.

24.2 Dynamic DNS update +UDYNDNS

+UDYNDNS						
Modules	TOBY-L200-02S TOBY-L200-03A TOBY-L200-03S TOBY-L201 TOBY-L210-02S TOBY-L210-03A TOBY-L210-03S TOBY-L210-62S TOBY-L220 TOBY-L280 MPCI-L200-02S MPCI-L200-03S MPCI-L201 MPCI-L210-02S MPCI-L210-03S MPCI-L220 MPCI-L280					
	LARA-R2 TOBY-R2					
	SARA-U2 LISA-U200-02S LISA-U200-03S LISA-U200-52S LISA-U200-62S LISA-U200-83S LISA-U201 LISA-U260-02S LISA-U270-02S LISA-U270-62S LISA-U270-63S LISA-U270-68S					
	SARA-G340 SARA-G350 SARA-G350-53S					
Attributes	**Syntax**	**PIN required**	**Settings saved**	**Can be aborted**	**Response time**	**Error reference**
	full	No	NVM	No	- (except URC)	DynDNS Error +CME Error

24.2.1 Introduction

The IP address assigned to a module by the network provider is often dynamic; this means the IP address changes every time a PDP context is enabled.

This could be a problem when it is needed to identify an internet host with a domain name, because they are usually used with static IP address that never changes (or rarely changes).

To solve this problem, the dynamic DNS services provide a way to assign a domain name to a host that owns a dynamic IP address, but they require a client that sends the latest IP given by the network to these services, to update their DNS tables.

With the +UDYNDNS command u-blox cellular modules can access to dynamic DNS services.

This functionality is disabled by default, but once configured and enabled it automatically sends updates to the configured Dynamc DNS service every time the module IP address change. The functionality only works for internal PDP context (see Multiple PDP contexts).

24.2.2 Description

Sets up the dynamic DNS client functionality. This command is part of the internal TCP/IP stack so it only works for internal PDP contexts (managed by +UPSD and +UPSDA command; see the Multiple PDP contexts).

The command configuration is stored into the NVM: if enabled, it automatically works after a reboot.

The following dynamic DNS providers are supported:

- TZO.com
- DynDNS.org
- DynDNS.it
- No-IP.org
- DNSDynamic.org

During the service subscription phase the dynamic DNS provider gives a domain name, a username and a password that the AT application will use later.

If the DYNDNS client is enabled when an internal PDP connection is already active, the DYNDNS client starts working on the next PDP context activation.

☞ This functionality is only available for the PDP context enabled with +UPSDA command.

☞ Before changing the dynamic DNS client configuration it is required to stop (deactivate) it. Any attempt to reconfigure an already running DNS client raises an error.

☞ The dynamic DNS update is not allowed during the first 60 s after module power on. If a PDP connection is established before this time, a URC notifies that the update has been delayed. In this case the update is performed once the 60 s are elapsed.

☞ The dynamic DNS protocol does not allow more than one update every 60 s, anyhow the module's DYNDNS client will respect specific timing rules depending on the selected provider policies.

☞ Due to the various caches involved in the DNS resolution process, the time since the DNS update is done until it is available for a user, can significantly change among different internet providers.

24.2.3 Syntax

Type	Syntax	Response	Example
Set	AT+UDYNDNS=<on_off>[,<service_id>,<domain_name>,<username>,<password>]	OK	**Enable the dynamic DNS client using the TZO DNS service and the domain name "remote001.tzo.net".** AT+UDYNDNS=1,0,"remote001.tzo.net","dummy_username","dummy_password" OK
			Disable the dynamic DNS client: AT+UDYNDNS=0 OK
Read	AT+UDYNDNS?	+UDYNDNS: <on_off>,<service_id>,<domain_name>,<username>,<password> OK	+UDYNDNS: 1,0,"remote001.tzo.net","dummy_username","dummy_password" OK
Test	AT+UDYNDNS=?	+UDYNDNS: (list of supported <on_off>),(list of supported <service_id>),<domain_name>,<username>,<password>) OK	+UDYNDNS: (0-1),(0-4),"domain_name","username","password" OK
URC		+UUDYNDNS: <status>,<code>	+UUDYNDNS: 1,0

24.2.4 Defined values

Parameter	Type	Description
<on_off>	Number	Enable / disable the dynamic DNS client: • 0 (factory-programmed value): disable the client • 1: enable the client
<service_id>	Number	Indicates which dynamic DNS service provider to use: • 0 (factory-programmed value): TZO.com • 1: DynDNS.org • 2: DynDNS.it • 3: No-IP.org • 4: DynamicDNS.org Mandatory parameter with <on_off>=1, not allowed with <on_off>=0.
<domain_name>	String	Indicates which domain name should be associated with the module IP address. The dynamic DNS service provider provides this value. Maximum length: 64 bytes. Mandatory parameter with <on_off>=1, not allowed with <on_off>=0. The factory-programmed value is an empty string.
<username>	String	The username used for the client authentication. Maximum length: 64 characters. Mandatory parameter with <on_off>=1, not allowed with <on_off>=0. The factory-programmed value is an empty string.
<password>	String	The password used for the client authentication. Maximum length: 32 characters. Mandatory parameter with <on_off>=1, not allowed with <on_off>=0. The factory-programmed value is an empty string.
<status>	Number	This is the internal status of the dynamic DNS client. Each time the internal status changes or there is an error the URC +UUDYNDNS is issued: • 0: client inactive/stopped • 1: client enabled/active • 2: DNS update successfully executed • 3: DNS update failed

Parameter	Type	Description
		• 4: DNS update delayed • 5: No DNS update is required • 6: Self deactivation: the dynamic DNS client will stop due to internal error or DynDNS protocol specification
<code>	Number	This is the code returned by the +UUDYNDNS URC. The meaning of the <code> value is described in Dynamic DNS unsolicited indication codes (see Dynamic DNS unsolicited indication codes).

24.2.5 Notes

- In case of self deactivation (+UUDYNDNS status = 6), the client is disabled (saving the disabled setting into the NVM); the customer has then to identify the cause (usually bad configuration of the client) and manually re-activate it. After a self deactivation it is always required to re-activate the client.
- If UDYNDNS is enabled and properly configured an +UUDYNDNS URC (+UUDYNDNS: 1,0) will be displayed at the "system power on" on AT terminal. The +UUDYNDNS URC (+UUDYNDNS: 1,0) notifies that the UDYNDNS service is enabled and that an dynamic IP address update will occur when an Internal PDP context will be activated or when an Internal PDP context IP address will change.

TOBY-L2 / MPCI-L2

- The +UUDYNDNS URC (i.e. +UUDYNDNS: 1,0) is not displayed at the "system power on" on USB connected AT terminals.

24.2.6 DynDNS client behavior in case of error

When the error result code is in range 1-10 and 100-108 the client waits for 60 s before allowing any update operation.

In all the other cases (error in range from 40 to 57) the following behaviors are applied:

- TOBY-L2 / MPCI-L2 / LARA-R2 / TOBY-R2 / SARA-U2 / LISA-U2 / SARA-G3 - For TZO.com:

DynDNS client error code	Provider error code	Client action
40	200	Next update will be possible after 60 s
41	304	Next update will be possible after 10 minutes
45	401	Client self deactivation
53	403	Client self deactivation
55	414	Next update will be possible after 60 s
46	405	Client self deactivation
54	407	Client self deactivation
56	415	Client self deactivation
57	480	Next update will be possible after 24 hours

- TOBY-L2 / MPCI-L2 / LARA-R2 / TOBY-R2 / SARA-U2 / LISA-U2 / SARA-G3 - For DynDNS.org, DynDNS.it, No-IP.org and DNSDynamic.org:

DynDNS client error code	Provider error code	Client action
40	good	Next update will be possible after 60 s
41	nochg	Next update will be possible after 10 minutes
45	badauth	Next update will be possible after 24 hours
47	!donator	Next update will be possible after 24 hours
42	notfqdn	Client self deactivation
43	nohost	Client self deactivation
44	numhost	Client self deactivation
48	abuse	Client self deactivation
46	badagent	Client self deactivation
49	dnserr	Next update will be possible after 30 minutes
50	911	Next update will be possible after 30 minutes
51	badsys	Client self deactivation
52	!yours	Client self deactivation

25 Internet protocol transport layer

25.1 Introduction

TOBY-L2 / MPCI-L2 / LARA-R2 / TOBY-R2 / SARA-U2 / LISA-U2 / LISA-U1 / SARA-G4 / SARA-G3 / LEON-G1
Before using TCP/IP services, a connection profile must be defined and activated. The sockets can be managed independently and simultaneously over the same bearer (either PSD or CSD). AT commands for both reading and writing data on sockets are provided and the URC notifies the external application of incoming data and transmission result, no need for polling.

TOBY-L2 / MPCI-L2 / LARA-R2 / TOBY-R2 / SARA-U2 / LISA-U2 / LISA-U1 / SARA-G4 / SARA-G3 / LEON-G1
See +UPSD, +UPSDA and +UPSND AT commands for establishing a PSD connection.

SARA-G3 / LEON-G1
See +UCSD, +UCSDA and +UCSND AT commands for establishing a CSD connection.

TOBY-L2 / MPCI-L2 / LARA-R2 / TOBY-R2 / SARA-U2 / LISA-U2 / LISA-U1 / SARA-G4 / SARA-G3 / LEON-G1
When these commands report an error result code which is not a +CME ERROR, the error code can be queried using the +USOER or +USOCTL (specifying the socket ID and with <param_id>=1) AT commands.

The maximum number of sockets that can be managed are 7.

TOBY-L2 / MPCI-L2
Check the module is in bridge mode (+UBMCONF: 1 / +UDPDP: 1) before issuing any internet suite AT commands.

The UDP protocol has not any flow control mechanism and packets might be lost in the following scenarios:

- No network signal is available
- Unreliable radio interface (e.g. mobility in GPRS, where cell reselections can lead to data loss, that can be contrasted with the usage of LLC ack reliability QoS parameter

LEON-G1
The maximum number of sockets that can be managed are 16.

Some network operators close dynamic NATs after few minutes if there is no activity on the connection (no data transfer in the period). To solve this problem enable the TCP keep alive options with 1 minute delay (see the +USOSO AT command).

When both TCP and UDP socket are used at the same time at the maximum throughput (downlink and uplink at the maximum allowed baud rate) it is possible to lose some incoming UDP packets due to internal buffer limitation. A possible workaround is provided as follows:

- If it is possible, adopt an application layer UDP acknowledge system
- On LEON-G1 series, stop sending TCP packet (and check with the +USOCTL command that the outgoing buffer is empty) when expecting to receive UDP data

LEON-G1
IP dotted notation does not support a leading 0 in an IP address (e.g. IP = 010.128.076.034 is not supported, 10.128.76.34 is supported).

LEON-G1
The +UPING command uses the TCP/IP resources in an exclusive way. All the other TCP/IP operations executed after the execution of the +UPING AT command will wait for the execution of this command.

25.2 IPv4/IPv6 addressing

25.2.1 Introduction

The section describes the IP addressing formats and IP address rules used by TCP/IP UDP/IP enabled applications.

25.2.2 IPv4

Format:

- 32 bits long in dot-decimal notation (without leading 0 notation).
- All the decimal numbers must be in range 0-255.
- The dot-octal notation is not supported.
- The dot-hexadecimal notation is not supported.

Examples:

IPv4 address	Remarks
254.254.254.254	Valid address
010.228.76.34	Invalid address; first decimal number prefixed with a leading zero
257.228.76.34	Invalid address; first decimal number greater than 255
0010.0344.0114.0042	Invalid address; dot-octal notation; decimals given as octal numbers
0x10.0xE4.0x4C.0x22	Invalid address; dot-hexadecimal notation; decimals given as hexadecimal numbers

Table 74: IPv4 address format examples

25.2.3 IPv6

Format:

- 128 bits long represented in 8 groups of 16 bits each.
- The 16 bits of a group are represented as 2 concatenated hexadecimal numbers.
- The groups are separated by a colon character (:).
- The leading 0 in a group is supported.
- A group containing 4 zeros can be abbreviated with one 0.
- Continuous groups (at least 2) with zeroes can be replaced with a double colon (::).
- The double colon can appear only once in an IPv6 address.

Examples:

IPv6 address	Remarks
2001:0104:0000:0000:0000:0104:0000:0000	Full version, with leading zeros
2001:104:0000:0000:0000:104:0000:0000	Abbreviated version, leading zero abbreviation
2001:104:0:0:0:104:0:0	Abbreviated version, zero group abbreviation
2001:104::104:0:0	Abbreviated version, one double colon abbreviation

Table 75: IPv6 address format examples

☞ SARA-U2 / LISA-U2 / LISA-U1 / SARA-G4 / SARA-G3 / LEON-G1
The internet suite applications do not support the IPv6 address format.

☞ The following AT commands support the IPv6 address format:
- Dynamic DNS update: +UDYNDNS
- Connect Socket: +USOCO
- SendTo command: +USOST
- Receive From command: +USORF
- Set Listening Socket: +USOLI
- IP Change Notification: +UIPCHGN
- FTP service configuration: +UFTP
- HTTP control: +UHTTP

For packet swiched services AT commands (i.e. PDP_addr in +CGDCONT) the format is specified in the corresponding command section.

25.3 Create Socket +USOCR

+USOCR						
Modules	TOBY-L200-02S TOBY-L200-03A TOBY-L200-03S TOBY-L201 TOBY-L210-02S TOBY-L210-03A TOBY-L210-03S TOBY-L210-62S TOBY-L220 TOBY-L280 MPCI-L200-02S MPCI-L200-03S MPCI-L201 MPCI-L210-02S MPCI-L210-03S MPCI-L220 MPCI-L280					
	LARA-R2 TOBY-R2					
	SARA-U2 LISA-U2 LISA-U1					
	SARA-G4 SARA-G340 SARA-G350 SARA-G350-53S LEON-G1					
Attributes	**Syntax**	**PIN required**	**Settings saved**	**Can be aborted**	**Response time**	**Error reference**
	partial	No	No	No	-	TCP/UDP/IP Error +CME Error

25.3.1 Description

Creates a socket and associates it with the specified protocol (TCP or UDP), returns a number identifying the socket. Such command corresponds to the BSD socket routine. Up to 7 sockets can be created. It is possible to specify the local port to bind within the socket in order to send data from a specific port. The bind functionality is supported for both TCP and UDP sockets.

☞ The socket creation operation can be performed only after the PDP context activation on one of the defined profiles.

☞ LEON-G1
Up to 16 sockets can be created.

25.3.2 Syntax

Type	Syntax	Response	Example
Set	AT+USOCR=<protocol>[,<local_port>]	+USOCR: <socket> OK	AT+USOCR=17 +USOCR: 2 OK
Test	AT+USOCR=?	+USOCR: (list of supported <protocol>s),(list of supported <local_port>s) OK	+USOCR: (6,17),(1-65535) OK

25.3.3 Defined values

Parameter	Type	Description
<protocol>	Number	• 6: TCP • 17: UDP
<local_port>	Number	Local port to be used while sending data. The range goes from 1 to 65535. If the parameter is omitted it will be set to 0; in this case a random port will be used while sending data.
<socket>	Number	Socket identifier to be used for any future operation on that socket. The range goes from 0 to 6.

25.3.4 Notes

TOBY-L2 / MPCI-L2

- The information text response to the test command does not provide the <local_port> parameter.

SARA-G3

- The test command is not supported.

LISA-U1

- The bind functionality is supported only for UDP sockets.

LEON-G1

- The socket creation operation can be performed even if the PDP context has not been activated.

- The range of <socket> parameter goes from 0 to 15.
- The test command is not supported.
- The bind functionality is supported only for UDP sockets.

25.4 SSL/TLS mode configuration on TCP socket +USOSEC

+USOSEC						
Modules	TOBY-L200-02S TOBY-L200-03A TOBY-L200-03S TOBY-L201-02S TOBY-L210-02S TOBY-L210-03A TOBY-L210-03S TOBY-L210-62S TOBY-L220 TOBY-L280 MPCI-L200-02S MPCI-L200-03S MPCI-L201-02S MPCI-L210-02S MPCI-L210-03S MPCI-L220 MPCI-L280					
	LARA-R2 TOBY-R2					
	SARA-U201 SARA-U260-03S SARA-U270-03A SARA-U270-03S SARA-U270-04B SARA-U270-53S SARA-U270-73S SARA-U280-03S LISA-U200-03S LISA-U200-83S LISA-U201					
	SARA-G4 SARA-G340-02S SARA-G340-02X SARA-G350-02A SARA-G350-02S SARA-G350-02X SARA-G350-53S					
Attributes	**Syntax**	**PIN required**	**Settings saved**	**Can be aborted**	**Response time**	**Error reference**
	full	No	No	No	< 20 s	+CME Error

25.4.1 Description

Enables or disables the use of SSL/TLS connection on a TCP socket. The configuration of the SSL/TLS properties is provided with an SSL/TLS profile managed by USECMNG.

The <usecmng_profile_id> parameter is listed in the information text response to the read command only if the SSL/TLS is enabled on the interested socket.

☞ This operation is only available for TCP sockets.

☞ The enable or disable operation can be performed only after the socket has been created with +USOCR AT command.

☞ The SSL/TLS is supported only with +USOCO command (socket connect command). The SSL/TLS is not supported with +USOLI command (socket set listen command is not supported and the +USOSEC settings will be ignored).

25.4.2 Syntax

Type	Syntax	Response	Example
Set	AT+USOSEC=<socket>,<ssl_tls_status>[,<usecmng_profile_id>]	OK	AT+USOSEC=0,1,1 OK
Read	AT+USOSEC=<socket>	+USOSEC=<socket>,<ssl_tls_status>[,<usecmng_profile_id>] OK	AT+USOSEC=0 +USOSEC=0,1,1 OK
Test	AT+USOSEC=?	+USOSEC: (list of supported <socket>s),(list of supported <ssl_tls_status>s),(list of supported <usecmng_profile_id>s) OK	+USOSEC: (0-6),(0,1),(0-4) OK

25.4.3 Defined values

Parameter	Type	Description
<socket>	Number	Socket identifier defined by the AT+USOCR command. The range goes from 0 to 6.
<ssl_tls_status>	Number	• 0 (default value): disable the SSL/TLS on the socket. • 1: enable the SSL/TLS on the socket; a USECMNG profile can be specified with the <usecmng_profile_id> parameter.
<usecmng_profile_id>	Number	Defines the USECMNG profile which specifies the SSL/TLS properties to be used for the SSL/TLS connection. The range goes from 0 to 4. If no profile is set a default USECMNG profile is used (see USECMNG section).

25.4.4 Notes

TOBY-L201-02S / MPCI-L201-02S

- The command is not supported by TOBY-L201-02S-00, MPCI-L201-02S-00.

25.5 Set socket option +USOSO

+USOSO						
Modules	TOBY-L200-02S TOBY-L200-03A TOBY-L200-03S TOBY-L201 TOBY-L210-02S TOBY-L210-03A TOBY-L210-03S TOBY-L210-62S TOBY-L220 TOBY-L280 MPCI-L200-02S MPCI-L200-03S MPCI-L201 MPCI-L210-02S MPCI-L210-03S MPCI-L220 MPCI-L280					
	LARA-R2 TOBY-R2					
	SARA-U2 LISA-U2 LISA-U1					
	SARA-G4 SARA-G340 SARA-G350 SARA-G350-53S LEON-G1					
Attributes	**Syntax**	**PIN required**	**Settings saved**	**Can be aborted**	**Response time**	**Error reference**
	full	No	No	No	-	TCP/UDP/IP Error +CME Error

25.5.1 Description

Sets the specified standard option (type of service, local address re-use, linger time, time-to-live, etc.) for the specified socket, like the BSD setsockopt routine.

☞ Issue a set command to set each parameter.

25.5.2 Syntax

Type	Syntax	Response	Example
Set	AT+USOSO=<socket>,<level>,<opt_name>,<opt_val>[,<opt_val2>]	OK	AT+USOSO=2,6,1,1 OK
Test	AT+USOSO=?	+USOSO: (list of supported <socket>s),(list of supported <level>s) OK	+USOSO: (0-6),(0,6,65535) OK

25.5.3 Defined values

Parameter	Type	Description
<socket>	Number	Socket identifier. The range goes from 0 to 6.
<level>	Number	• 0: IP protocol <opt_name> for IP protocol level may be: o 1: type of service (TOS) <opt_val>: 8 bitmask that represents the flags of IP TOS. The range is 0-255 (the default value is 0). For more information see the RFC 791 [27] o 2: time-to-live (TTL) <opt_val>: unsigned 8 bit value representing the TTL. The range is 0-255 (the default value is 255) • 6: TCP protocol <opt_name> for TCP protocol level may be: o 1: no delay option; do not delay send to coalesce packets; <opt_val>: numeric parameter, it enables/disables the "no delay" option: - 0 (default value): disabled - 1: enabled o 2: keepidle option: send keepidle probes when it is idle for <opt_val> milliseconds <opt_val>: signed 32 bit numeric parameter representing the milliseconds for "keepidle" option. The range is 0-2147483647. The default value is 7200000 (2 hours) • 65535: socket <opt_name> for socket level options may be: o 4: local address re-use. <opt_val>: numeric parameter, it configures the "local address re-use" option.

Parameter	Type	Description
		- 0 (default value): disabled - 1: enabled o 8: keep connections alive. <opt_val>: numeric parameter, it configures "keep connections alive" option. - 0 (default value): disabled - 1: enabled o 32: sending of broadcast messages. <opt_val>: numeric parameter, it configures "sending of broadcast messages". - 0 (default value): disabled - 1: enabled o 128: linger on close if data present. <opt_val>: numeric parameter, it configures the "linger" option. - 0 (default value): disabled - 1: enabled <opt_val2>: signed 16 bit numeric parameter, it sets the linger time, the range goes from 0 to 32767 in milliseconds. The default value is 0. o 512: local address and port re-use. <opt_val>: numeric parameter, it configures the "local address and port re-use". - 0 (default value): disabled - 1: enabled
<opt_name>	Number	Type and supported content depend on the related <level> parameter value (details are given above).
<opt_val>	Number	Type and supported content depend on the related <level> parameter value (details are given above).
<opt_val2>	Number	Type and supported content depend on the related <level> parameter value (details are given above).

25.5.4 Notes

TOBY-L2 / MPCI-L2

- It is not possible to change the settings of bit 6 and 7 for Type of Service (<level>=0 and <opt_name>= 1, i.e. AT+USOSO=0,0,1,<opt_val>).

SARA-G3

- The test command is not supported.

SARA-G4

- If <level>= 65535, <opt_name>= 512 is not supported.
- The range of the linger time (<opt_val2> parameter) goes from 0 to 65535 s.

LEON-G1

- The range of <socket> parameter goes from 0 to 15.
- The test command is not supported.

25.6 Get Socket Option +USOGO

+USOGO						
Modules	TOBY-L200-02S TOBY-L200-03A TOBY-L200-03S TOBY-L201 TOBY-L210-02S TOBY-L210-03A TOBY-L210-03S TOBY-L210-62S TOBY-L220 TOBY-L280 MPCI-L200-02S MPCI-L200-03S MPCI-L201 MPCI-L210-02S MPCI-L210-03S MPCI-L220 MPCI-L280					
	LARA-R2 TOBY-R2					
	SARA-U2 LISA-U2 LISA-U1					
	SARA-G4 SARA-G340 SARA-G350 SARA-G350-53S LEON-G1					
Attributes	**Syntax**	**PIN required**	**Settings saved**	**Can be aborted**	**Response time**	**Error reference**
	full	No	No	No	-	TCP/UDP/IP Error +CME Error

25.6.1 Description

Retrieves the specified standard option (type of service, local address re-use, linger time, time-to-live, etc) for the specified socket, like the BSD getsockopt routine.

25.6.2 Syntax

Type	Syntax	Response	Example
Set	AT+USOGO=<socket>,<level>,<opt_name>	+USOGO: <opt_val>[,<opt_val2>] OK	AT+USOGO=0,0,2 +USOGO: 255 OK
Test	AT+USOGO=?	+USOGO: (list of supported <socket>s),(list of supported <level>s) OK	+USOGO: (0-6),(0,6,65535) OK

25.6.3 Defined values

Parameter	Type	Description
<socket>	Number	Socket identifier. The range goes from 0 to 6.
<level>	Number	• 0: IP Protocol <opt_name> for IP protocol level may be: o 1: type of service <opt_val>: 8 bit mask that represents the flags of IP TOS. For more information see the RFC 791 [27]. The range is 0-255. The default value is 0 o 2: time-to-live <opt_val>: unsigned 8 bit value representing the TTL. The range is 0-255. The default value is 0. • 6: TCP Protocol <opt_name> for TCP protocol level may be: o 1: no delay option: do not delay send to coalesce packets <opt_val>: numeric parameter, it enables/disables the "no delay" option - 0 (default value): disabled - 1: enabled o 2: keepidle option: send keepidle probes when idle for <opt_val> milliseconds <opt_val>: signed 32 bit number value representing the milliseconds for "keepidle" option. The range 0-2147483647. The default value is 7200000 (2 hours) • 65535: socket <opt_name> for the socket level options may be: o 4: local address re-use <opt_val>: numeric parameter, it configures the "local address re-use" option: - 0 (default value): disabled - 1: enabled o 8: keep connections alive <opt_val>: numeric parameter, it configures the "keep connections alive" option:

Parameter	Type	Description
		- 0 (default value): disabled - 1: enabled o 32: sending of broadcast messages <opt_val>: numeric parameter, it configures the "sending of broadcast messages": - 1: enabled - 0 (default value): disabled o 128: linger on close if data present <opt_val>: numeric parameter, it sets on/off the "linger" option. - 0 (default value): disabled - 1: enabled <opt_val2>: signed 16 bit numeric value, linger time, the range goes from 0 to 32767 in milliseconds. The default value is 0. o 512: local address and port re-use <opt_val>: numeric parameter, it enables/disables "local address and port re-use": - 0 (default value): disabled - 1: enabled

25.6.4 Notes

SARA-G3

- The test command is not supported.

SARA-G4

- If <level>= 65535, <opt_name>= 512 is not supported.
- The range of the linger time (<opt_val2> parameter) goes from 0 to 65535 s.

LEON-G1

- The range of <socket> parameter goes from 0 to 15.
- The test command is not supported.

25.7 Close Socket +USOCL

+USOCL						
Modules	TOBY-L200-02S TOBY-L200-03A TOBY-L200-03S TOBY-L201 TOBY-L210-02S TOBY-L210-03A TOBY-L210-03S TOBY-L210-62S TOBY-L220 TOBY-L280 MPCI-L200-02S MPCI-L200-03S MPCI-L201 MPCI-L210-02S MPCI-L210-03S MPCI-L220 MPCI-L280					
	LARA-R2 TOBY-R2					
	SARA-U2 LISA-U2 LISA-U1					
	SARA-G4 SARA-G340 SARA-G350 SARA-G350-53S LEON-G1					
Attributes	**Syntax**	**PIN required**	**Settings saved**	**Can be aborted**	**Response time**	**Error reference**
	partial	No	No	No	< 1 s (except URC)	+CME Error

25.7.1 Description

Closes the specified socket, like the BSD close routine. In case of remote socket closure the user is notified via the URC.

By default the command blocks the AT command interface until the the completion of the socket close operation. By enabling the <async_close> flag, the final result code is sent immediately. The following +UUSOCL URC will indicate the closure of the specified socket.

25.7.2 Syntax

Type	Syntax	Response	Example
Set	AT+USOCL=<socket>[,<async_close>]	OK	AT+USOCL=2 OK
Test	AT+USOCL=?	+USOCL: (list of supported <socket>s)	+USOCL: (0-6),(0-1)

Type	Syntax	Response	Example
		OK	OK
URC		+UUSOCL: <socket>	+UUSOCL: 2

25.7.3 Defined values

Parameter	Type	Description
<socket>	Number	Socket identifier. The range goes from 0 to 6
<async_close>	Number	Asynchronous close flag. The flag has effect for TCP connections only. Allowed values: • 0 (default value): the operation result is returned only once the result of the TCP close becomes available, locking the AT interface until the connection closes. • 1: the final result code is returned immediately unlocking the AT interface and making it available for the execution of other AT commands. Once the result of TCP close becomes available, it is notified to the AT interface through the +UUSOCL URC.

25.7.4 Notes

TOBY-L2 / MPCI-L2 / LARA-R2 / TOBY-R2 / SARA-U2 / LISA-U2 / LISA-U1 / SARA-G4 / SARA-G3 / LEON-G1

- The <async_connect> parameter is not supported.

SARA-G3

- The test command is not supported.

LEON-G1

- The range of <socket> parameter goes from 0 to 15.
- The test command is not supported.

25.8 Get Socket Error +USOER

+USOER						
Modules	TOBY-L200-02S TOBY-L200-03A TOBY-L200-03S TOBY-L201 TOBY-L210-02S TOBY-L210-03A TOBY-L210-03S TOBY-L210-62S TOBY-L220 TOBY-L280 MPCI-L200-02S MPCI-L200-03S MPCI-L201 MPCI-L210-02S MPCI-L210-03S MPCI-L220 MPCI-L280					
	LARA-R2 TOBY-R2					
	SARA-U2 LISA-U2 LISA-U1					
	SARA-G4 SARA-G340 SARA-G350 SARA-G350-53S LEON-G1					
Attributes	**Syntax**	**PIN required**	**Settings saved**	**Can be aborted**	**Response time**	**Error reference**
	full	No	No	No	-	TCP/UDP/IP Error +CME Error

25.8.1 Description

Retrieves the last error occurred in the last socket operation, stored in the BSD standard variable error.

25.8.2 Syntax

Type	Syntax	Response	Example
Action	AT+USOER	+USOER: <socket_error>	+USOER: 104
		OK	OK

25.8.3 Defined values

Parameter	Type	Description
<socket_error>	Number	Code of the last error occurred in a socket operation. The allowed values are listed in Appendix A.8 • 0: no error

25.9 Connect Socket +USOCO

+USOCO						
Modules	TOBY-L200-02S TOBY-L200-03A TOBY-L200-03S TOBY-L201 TOBY-L210-02S TOBY-L210-03A TOBY-L210-03S TOBY-L210-62S TOBY-L220 TOBY-L280 MPCI-L200-02S MPCI-L200-03S MPCI-L201 MPCI-L210-02S MPCI-L210-03S MPCI-L220 MPCI-L280					
	LARA-R2 TOBY-R2					
	SARA-U2 LISA-U2 LISA-U1					
	SARA-G4 SARA-G340 SARA-G350 SARA-G350-53S LEON-G1					
Attributes	**Syntax**	**PIN required**	**Settings saved**	**Can be aborted**	**Response time**	**Error reference**
	partial	No	No	No	< 120 s	TCP/UDP/IP Error +CME Error

25.9.1 Description

Establishes a peer-to-peer connection of the socket to the specified remote host on the given remote port, like the BSD connect routine. If the socket is a TCP socket, the command will actually perform the TCP negotiation (3-way handshake) to open a connection. If the socket is a UDP socket, this function will just declare the remote host address and port for later use with other socket operations (e.g. +USOWR, +USORD). This is important to note because if <socket> refers to a UDP socket, errors will not be reported prior to an attempt to write or read data on the socket.

☞ The estimated response time depends also by the DNS resolution. For further details about the estimated response time related to the DNS resolution, see the +UDNSRN AT command.

25.9.2 Syntax

Type	Syntax	Response	Example
Set	AT+USOCO=<socket>,<remote_addr>,<remote_port>[,<async_connect>]	OK	AT+USOCO=3,"151.63.16.9",1200 OK
			AT+USOCO=2,"151.63.16.9",8200,1 OK +UUSOCO: 2,0
			AT+USOCO=2,"151.63.16.9",8230,0 OK
Test	AT+USOCO=?	+USOCO: (list of supported <socket>s),"remote_host",(list of supported <remote_port>s),(list of supported <async_connect>s) OK	+USOCO: (0-6),"remote_host",(1-65535),(0-1) OK
URC		+UUSOCO: <socket>,<socket_error>	+UUSOCO: 2,0

25.9.3 Defined values

Parameter	Type	Description
<socket>	Number	Socket identifier. The range goes from 0 to 6
<remote_addr>	String	Remote host IP address or domain name of the remote host. For IP address format reference see the IP addressing.
<remote_port>	Number	Remote host port, in range 1-65535
<async_connect>	Number	Asynchronous connect flag. The flag has effect for TCP connections only. Allowed values: • 0 (default value): the operation result is returned only once the TCP connection is established, locking the AT interface until the connection activity is running • 1: the final result code is returned immediately unlocking the AT interface and making it available for the execution of other AT commands. Once the result of TCP connection becomes available, it is notified to the AT interface through the +UUSOCO URC.

Parameter	Type	Description
<socket_error>	Number	Code of the last error occurred in a socket operation. The allowed values are listed in Appendix A.8: • 0: no error, connection successful

25.9.4 Notes

- In case of the socket connection with the asynchronous flag:
  - the socket will be closed if a further +USOCO AT command is issued before having received the +UUSOCO URC of the first AT command.
  - it is not possible to connect a second socket before the reception of the +UUSOCO URC related to the pending socket connection.

TOBY-L2 / MPCI-L2 / LARA-R2 / TOBY-R2 / SARA-U201-03A / SARA-U201-03B / SARA-U201-03X / SARA-U201-63B / SARA-U260 / SARA-U270-00S / SARA-U270-00X / SARA-U270-03A / SARA-U270-03S / SARA-U270-53S / SARA-U270-73S / SARA-U280 / LISA-U2 / LISA-U1 / SARA-G3 / LEON-G1

- The <async_connect> parameter and the +UUSOCO URC are not available.

TOBY-L2 / MPCI-L2

- If the +UPSD command sets the PSD profile protocol type to IPv6, an IPv6 address shall be used for the remote host IP address parameter.

SARA-G3

- The test command is not supported.

LEON-G1

- The range of <socket> parameter goes from 0 to 15.
- The test command is not supported.

25.10 Write socket data +USOWR

+USOWR						
Modules	TOBY-L200-02S TOBY-L200-03A TOBY-L200-03S TOBY-L201 TOBY-L210-02S TOBY-L210-03A TOBY-L210-03S TOBY-L210-62S TOBY-L220 TOBY-L280 MPCI-L200-02S MPCI-L200-03S MPCI-L201 MPCI-L210-02S MPCI-L210-03S MPCI-L220 MPCI-L280					
	LARA-R2 TOBY-R2					
	SARA-U2 LISA-U2 LISA-U1					
	SARA-G4 SARA-G340 SARA-G350 SARA-G350-53S LEON-G1					
Attributes	**Syntax**	**PIN required**	**Settings saved**	**Can be aborted**	**Response time**	**Error reference**
	partial	No	No	No	< 1 s	TCP/UDP/IP Error +CME Error

25.10.1 Description

Writes the specified amount of data to the specified socket, like the BSD write routine, and returns the number of bytes of data actually written. The command applies to UDP sockets too, after a +USOCO command.

There are three kinds of syntax:

- Base syntax normal: writing simple strings to the socket, some characters are forbidden
- Base syntax HEX: writing hexadecimal strings to the socket, the string will be converted in binary data and sent to the socket; see the AT+UDCONF=1 command description to enable it
- Binary extended syntax: mandatory for writing any character in the ASCII range [0x00, 0xFF]

☞ Some notes about the **TCP socket**:

- If no network signal is available, the TCP packets are enqueued until the network will become available again. If the TCP queue is full the +USOWR command will return an error result code. To get the last socket error use the +USOCTL=1 command. If the error code returned is 11, it means that the queue is full.
- If the connection is closed by the remote host, the +UUSOCL URC is not sent until all received data is read using the AT+USORD command. If AT+USOWR command is used in this situation, an error result code is returned. See also the Notes section about the specific product behaviour

- If the connection is closed by the remote host and binary interface started with AT+USOWR command is still waiting for data, an error result code is returned indicating that the binary interface was closed. After the error result code a +UUSOCL URC is reported indicating that the socket was closed.

☞ Some notes about the **UDP socket**:
- Due to the UDP specific AT commands, it is preferred to use the +USOST command to send data via UDP socket. This command does not require the usage of +USOCO before sending data.
- If no network signal is available, out going UDP packet may be lost.

☞ The information text response indicates that data has been sent to lower level of protocol stack. This is not an indication of an acknowledgement received by the remote server the socket is connected to.

25.10.2 Syntax

Type	Syntax	Response	Example
Base syntax			
Set	AT+USOWR=<socket>,<length>,<data>	+USOWR: <socket>,<length> OK	AT+USOWR=3,12,"Hello world!" +USOWR: 3,12 OK
Binary syntax			
Set	AT+USOWR=<socket>,<length>	@<data> +USOWR: <socket>,<length> OK	AT+USOWR=3,16 @16 bytes of data +USOWR: 3,16 OK
Test	AT+USOWR=?	+USOWR: (list of supported <socket>s),(list of supported <length>s),"HEX data" +USOWR: (list of supported <socket>s),(list of supported <length>s),"data" +USOWR: (list of supported <socket>s),(list of supported <length>s) OK	+USOWR: (0-6),(0-512),"HEX data" +USOWR: (0-6),(0-1024),"data" +USOWR: (0-6),(0-1024) OK

25.10.3 Defined values

Parameter	Type	Description
<socket>	Number	Socket identifier. The range goes from 0 to 6.
<length>	Number	Number of data bytes to write: • Base syntax normal mode: range 1-1024 • Base syntax HEX mode: range 1-512 • Binary extended syntax: range 1-1024
<data>	String	Data bytes to be written. Not all of the ASCII charset can be used.

25.10.4 Notes

- For base syntax:
  - The value of <length> and the actual length of <data> must match
- For base syntax HEX mode:
  - Only the ASCII characters 0-9, A-F and a-f are allowed.
  - The length of the <data> parameter must be two times the <length> parameter.
- For binary syntax:
  - After the command is sent, the user waits for the @ prompt. When it appears the stream of bytes can be provided. After the specified amount of bytes has been sent, the system provides the final result code. The feed process cannot be interrupted i.e. the return in the command mode can be effective only when the number of bytes provided is the declared one.
  - After the @ prompt reception, wait for a minimum of 50 ms before sending data.

  - The binary extended syntax is the only way for the system to accept control characters as data; for the AT command specifications 3GPP TS 27.005 [16], characters like <CR>, <CTRL-Z>, quotation marks, etc. have a specific meaning and they cannot be used like data in the command itself. The command is so extended with a specific acceptance state identified by the @ prompt.
  - This feature can be successfully used when there is need to send a byte stream which belongs to a protocol that has any kind of characters in the ASCII range [0x00,0xFF].
  - In binary mode the module does not display the echo of data bytes.
  - Binary syntax is not affected by HEX mode option.
- For <data> parameter not all of the ASCII charset can be used.

TOBY-L2 / LEON-G1

- **TCP socket**: A write operation performed when the remote host has closed its part of the TCP connection (FIN packet received by the module) - but there is still data to be read from the socket - is accepted. This behaviour differs from LISA-U / SARA-U series, where this operation returns an error. It is suggested to read all the socket data before triggering a write command, to avoid this situation.

SARA-G3 / LEON-G1

- The range of <length> parameter is
  - Base syntax normal mode: 0-512
  - Base syntax HEX mode: 0-250
- The test command is not supported.

LEON-G1

- The range of <socket> parameter goes from 0 to 15.
- For the binary syntax in binary mode the module displays the echo of data bytes.

25.11 SendTo command (UDP only) +USOST

+USOST						
Modules	TOBY-L200-02S TOBY-L200-03A TOBY-L200-03S TOBY-L201 TOBY-L210-02S TOBY-L210-03A TOBY-L210-03S TOBY-L210-62S TOBY-L220 TOBY-L280 MPCI-L200-02S MPCI-L200-03S MPCI-L201 MPCI-L210-02S MPCI-L210-03S MPCI-L220 MPCI-L280					
	LARA-R2 TOBY-R2					
	SARA-U2 LISA-U2 LISA-U1					
	SARA-G4 SARA-G340 SARA-G350 SARA-G350-53S LEON-G1					
Attributes	**Syntax**	**PIN required**	**Settings saved**	**Can be aborted**	**Response time**	**Error reference**
	full	No	No	No	< 1 s	TCP/UDP/IP Error +CME Error

25.11.1 Description

Writes the specified amount of data to the remote address, like the BSD sendto routine, and returns the number of bytes of data actually written. It can be applied to UDP sockets only. This command allows the reuse of the same socket to send data to many different remote hosts.

There are three kinds of syntax:

- Base syntax normal: writing simple strings to the socket, there are characters which are forbidden
- Base syntax HEX: writing hexadecimal strings to the socket, the string will be converted in binary data and sent to the socket
- Binary extended syntax: mandatory for writing any character in the ASCII range [0x00, 0xFF]

☞ It is strongly recommended using this command to send data while using UDP sockets. It is also recommended avoiding +USOCO usage with UDP socket.

☞ (about UDP socket): if no network signal is available, outcoming UDP packet may be lost.

☞ To enable the base syntax HEX mode, see the AT+UDCONF=1 command description.

25.11.2 Syntax

Type	Syntax	Response	Example
Base syntax			
Set	AT+USOST=<socket>,<remote_addr>,<remote_port>,<length>,<data>	+USOST: <socket>,<length> OK	AT+USOST=3,"151.9.34.66",449,16,"16 bytes of data" +USOST: 3,16 OK
Binary syntax			
Set	AT+USOST=<socket>,<remote_addr>,<remote_port>,<length> After the"@" prompt <length> bytes of data are entered	@<data> +USOST: <socket>,<length> OK	AT+USOST=3,"151.9.34.66",449,16 @16 bytes of data +USOST: 3,16 OK
Test	AT+USOST=?	+USOST: (list of supported <socket>s),"remote_host",(list of supported <remote_port>s),(list of supported <length>s),"HEX data" +USOST: (list of supported <socket>s),"remote_host",(list of supported <remote_port>s),(list of supported <length>s),"data" +USOST: (list of supported <socket>s),"remote_host",(list of supported <remote_port>s),(list of supported <length>s) OK	+USOST: (0-6),"remote_host",(1-65535),(0-512),"HEX data" +USOST: (0-6),"remote_host",(1-65535),(0-1024),"data" +USOST: (0-6),"remote_host",(1-65535),(0-1024) OK

25.11.3 Defined values

Parameter	Type	Description
<socket>	Number	Socket identifier. The range goes from 0 to 6.
<remote_addr>	String	Remote host IP address or domain name of the remote host. For IP address format reference see the IP addressing.
<remote_port>	Number	Remote host port, in range 1-65535
<length>	Number	Number of data bytes to write • Base syntax normal mode: range 1-1024 • Base syntax HEX mode: range 1-512 • Binary syntax mode: range 1-1024
<data>	String	Data bytes to be written (not all of the ASCII charset can be used)

25.11.4 Notes

- For base syntax:
  - The value of <length> and the actual length of <data> must match
  - For base syntax HEX mode, only ASCII characters 0-9, A-F and a-f are allowed. The length of the <data> parameter must be two times the <length> parameter
- For binary syntax:
  - After the command is sent, the user waits for the @ prompt. When it appears the stream of bytes can be provided. After the specified amount of bytes has been sent, the system returns with final result code. The feed process cannot be interrupted i.e. the return in the command mode can be effective only when the number of bytes provided is the declared one
  - That binary extended syntax is the only way for the system to accept control characters as data; for the AT command specifications [16], characters like <CR>, <CTRL-Z>, quotation marks, etc. have a specific meaning and they cannot be used like data in the command itself. The command is so extended with a specific acceptance state identified by the @ prompt
  - This feature can be successfully used when there is need to send a byte stream which belongs to a protocol that has any kind of characters in the ASCII range [0x00,0xFF]
  - In binary mode the module does not display the echo of data bytes

- Binary syntax is not affected by HEX mode option

TOBY-L2 / MPCI-L2

- If the +UPSD command sets the PSD profile protocol type to IPv6, an IPv6 address shall be used for the remote host IP address.

SARA-U260-00S / SARA-U270-00S / SARA-U270-00X / SARA-U280-00S / LISA-U200-00S / LISA-U200-01S / LISA-U200-02S / LISA-U200-52S / LISA-U200-62S / LISA-U230 / LISA-U260 / LISA-U270 / LISA-U1 / SARA-G3 / LEON-G1

- For <remote_addr> parameter only IP address is allowed.

SARA-G3 / LEON-G1

- The range of <length> parameter is
  - Base syntax: 0-512
  - Base syntax HEX mode: 0-250
- The test command is not supported.

LEON-G1

- The range of <socket> parameter goes from 0 to 15.
- For the binary syntax in binary mode the module displays the echo of data bytes.

25.12 Read Socket Data +USORD

+USORD						
Modules	TOBY-L200-02S TOBY-L200-03A TOBY-L200-03S TOBY-L201 TOBY-L210-02S TOBY-L210-03A TOBY-L210-03S TOBY-L210-62S TOBY-L220 TOBY-L280 MPCI-L200-02S MPCI-L200-03S MPCI-L201 MPCI-L210-02S MPCI-L210-03S MPCI-L220 MPCI-L280					
	LARA-R2 TOBY-R2					
	SARA-U2 LISA-U2 LISA-U1					
	SARA-G4 SARA-G340 SARA-G350 SARA-G350-53S LEON-G1					
Attributes	**Syntax**	**PIN required**	**Settings saved**	**Can be aborted**	**Response time**	**Error reference**
	full	No	No	No	< 1 s (except URC)	TCP/UDP/IP Error +CME Error

25.12.1 Description

Reads the specified amount of data from the specified socket, like the BSD read routine. This command can be used to know the total amount of unread data.

For the TCP socket type the URC **+UUSORD: <socket>,<length>** notifies the data bytes available for reading, either when buffer is empty and new data arrives or after a partial read by the user.

For the UDP socket type the URC **+UUSORD: <socket>,<length>** notifies that a UDP packet has been received, either when buffer is empty or after a UDP packet has been read and one or more packets are stored in the buffer.

In case of a partial read of a UDP packet **+UUSORD: <socket>,<length>** will show the remaining number of data bytes of the packet the user is reading.

☞ (about UDP socket) Due to the UDP specific AT command, it is preferred to use the +USORF command to read data from UDP socket. +USORF command does not require the usage of +USOCO before reading data.

☞ When applied to UDP active sockets if the UDP socket is not set in listening mode (see +USOLI) it will not be possible to receive any packet if a previous write operation is not performed.

☞ If the HEX mode is enabled (refer to AT+UDCONF=1 command) the received data will be displayed using an hexadecimal string.

25.12.2 Syntax

Type	Syntax	Response	Example
Set	AT+USORD=<socket>,<length>	+USORD: <socket>,<length>,<data in the ASCII [0x00,0xFF] range>	AT+USORD=3,16

Type	Syntax	Response	Example
		OK	+USORD: 3,16,"16 bytes of data" OK
Test	AT+USORD=?	+USORD: (list of supported <socket>s),(list of supported <length>s) OK	+USORD: (0-6),(0-1024) OK
URC		+UUSORD: <socket>,<length>	+UUSORD: 3,16

25.12.3 Defined values

Parameter	Type	Description
<socket>	Number	Socket identifier. The range goes from 0 to 6.
<length>	Number	Number of data bytes • to read stored in buffer, in range 0-1024 in the set command • read from buffer, in range 0-1024 • stored in buffer for the URC
<data>	String	Data bytes to be read

25.12.4 Notes

- The returned data may be any ASCII character in the range [0x00,0xFF] i.e. control characters. The starting quotation marks shall not be taken into account like data; the first byte of data starts after the first quotation marks. Then the other characters are provided for a <length> amount. An application should rely on the <length> info to count the received number of characters (after the starting quotation marks) especially if any protocol control characters are expected.
- If an application deals with letter and number characters only i.e. all of the expected characters are outside the [0x00, 0x1F] range and are not quotation marks, the AT+USORD response quotation marks can be assumed to identify the start and the end of the received data packet. Always check <length> to identify the valid data stream.
- If the number of data bytes requested to be read from the buffer is bigger than the number of bytes stored in the buffer only the available amount of data bytes will be read.
- When <length>= 0, the command returns the total amount of data present in the network buffer.
  Example: 23 unread bytes in the socket.

```
AT+USORD=3,0
+USORD: 3,23
OK
```

- If the HEX mode is enabled, the length of <data> will be 2 times <length>.

SARA-G3

- The test command is not supported.

LEON-G1

- The range of <socket> parameter goes from 0 to 15.
- The test command is not supported.

25.13 Receive From command (UDP only) +USORF

+USORF						
Modules	TOBY-L200-02S TOBY-L200-03A TOBY-L200-03S TOBY-L201 TOBY-L210-02S TOBY-L210-03A TOBY-L210-03S TOBY-L210-62S TOBY-L220 TOBY-L280 MPCI-L200-02S MPCI-L200-03S MPCI-L201 MPCI-L210-02S MPCI-L210-03S MPCI-L220 MPCI-L280					
	LARA-R2 TOBY-R2					
	SARA-U2 LISA-U2 LISA-U1					
	SARA-G4 SARA-G340 SARA-G350 SARA-G350-53S LEON-G1					
Attributes	**Syntax**	**PIN required**	**Settings saved**	**Can be aborted**	**Response time**	**Error reference**
	full	No	No	No	< 1 s (except URC)	TCP/UDP/IP Error +CME Error

25.13.1 Description

Reads the specified amount of data from the specified UDP socket, like the BSD recvfrom routine. The URC **+UUSORF: <socket>,<length>** (or also +UUSORD: <socket>,<length>) notifies that new data is available for reading, either when new data arrives or after a partial read by the user for the socket. This command can also return the total amount of unread data.

This command can be applied to UDP sockets only, and it can be used to read data after both +UUSORD and +UUSORF unsolicited indication.

☞ If the HEX mode is enabled (see +UDCONF=1) the received data will be displayed using an hexadecimal string.

25.13.2 Syntax

Type	Syntax	Response	Example
Set	AT+USORF=<socket>,<length>	+USORF: <socket>,<remote_ip_addr>,<remote_port>,<length>,<data in the ASCII [0x00,0xFF] range> OK	AT+USORF=3,16 +USORF: 3,"151.9.34.66",2222,16,"16 bytes of data" OK
Test	AT+USORF=?	+USORF: (list of supported <socket>s),(list of supported <length>s) OK	+USORF: (0-6),(0-1024) OK
URC		+UUSORF: <socket>,<length>	+UUSORF: 3,16

25.13.3 Defined values

Parameter	Type	Description
<socket>	Number	Socket identifier. The range goes from 0 to 6
<remote_ip_addr>	String	Remote host IP address. For IP address format reference see the IP addressing.
<remote_port>	Number	Remote host port, in range 1-65535
<length>	Number	Number of data bytes to read, in range 0-1024
<data>	String	Data bytes to be read

25.13.4 Notes

- Each packet received from the network is stored in a separate buffer and the command is capable to read only a packet (or e portion of it) at time. This means that if <length> is greater than the packet size, the command will return a maximum amount of data equal to the packet size, also if there are other packets in the buffer. The remaining data (i.e. the remaining UDP packets) can be read with further reads.
- The returned data may have any kind of ASCII character in the range [0x00,0xFF] i.e. control characters too. The starting quotation marks shall not be taken into account like data; the first byte of data starts after the first quotation marks. Then the other characters are provided for a <length> amount. At the end of the length byte stream, another quotation marks followed by <CR><LF> are provided for user convenience and visualization purposes. An application should rely on the <length> info to count the

received number of characters (after the starting quotation marks) especially if any protocol control characters are expected.

- If an application deals with letter and number characters only i.e. all of the expected characters are outside the [0x00, 0x1F] range and are not quotation marks, the AT+USORD response quotation marks can be assumed to identify the start and the end of the received data packet, anyway the <length> field usage to identify the valid data stream is recommended.
- When <length>= 0, the command returns the total amount of data present in the network buffer.
  Example: 23 unread bytes in the socket.

```
AT+USORF=3,0
+USORF: 3,23
OK
```

- If the HEX mode is enabled, the length of <data> will be 2 times <length>.

TOBY-L2 / MPCI-L2

- If the +UPSD command sets the PSD profile protocol type to IPv6, an IPv6 address will be reported in the remote host IP address.
- The +UUSORD URC does report the length of next packet in UDP RX buffer only (and not the total amount of received data present in the UDP RX buffer for the specified socket).

SARA-G3

- The test command is not supported.

LEON-G1

- The range of <socket> parameter goes from 0 to 15.
- The test command is not supported.

25.14 Set Listening Socket +USOLI

+USOLI						
Modules	TOBY-L200-02S TOBY-L200-03A TOBY-L200-03S TOBY-L201 TOBY-L210-02S TOBY-L210-03A TOBY-L210-03S TOBY-L210-62S TOBY-L220 TOBY-L280 MPCI-L200-02S MPCI-L200-03S MPCI-L201 MPCI-L210-02S MPCI-L210-03S MPCI-L220 MPCI-L280					
	LARA-R2 TOBY-R2					
	SARA-U2 LISA-U2 LISA-U1					
	SARA-G4 SARA-G340 SARA-G350 SARA-G350-53S LEON-G1					
Attributes	**Syntax**	**PIN required**	**Settings saved**	**Can be aborted**	**Response time**	**Error reference**
	full	No	No	No	< 1 s (except URC)	TCP/UDP/IP Error +CME Error

25.14.1 Description

Sets the specified socket in listening mode on the specified port of service, waiting for incoming connections (TCP) or data (UDP):

- For **TCP sockets**, incoming connections will be automatically accepted and notified via the URC **+UUSOLI: <socket>,<ip_address>,<port>,<listening_socket>,<local_ip_address>,<listening_port>,** carrying the connected socket identifier, the remote IP address and port.
- For **UDP sockets**, incoming data will be notified via URC **+UUSORF: <listening_socket>,<length>.** To know from which remote IP address and port the data is coming from, use the AT+USORF command.

25.14.2 Syntax

Type	Syntax	Response	Example
Set	AT+USOLI=<socket>,<port>	OK	**TCP sockets** AT+USOLI=2,1200 OK +UUSOLI: 3,"151.63.16.7",1403,2,"82.89.67.164",1200
			UDP sockets

Type	Syntax	Response	Example
			AT+USOLI=0,1182 OK +UUSORF: 0,1024
Test	AT+USOLI=?	+USOLI: (list of supported <socket>s),(list of supported <port>s) OK	+USOLI: (0-6),(1-65535) OK
URC (TCP)		+UUSOLI: <socket>,<ip_address>,<port>,<listening_socket>,<local_ip_address>,<listening_port>	+UUSOLI: 3,"151.63.16.7",1403,0,"82.89.67.164",200
URC (UDP)		+UUSORF: <listening_socket>,<length>	+UUSORF: 1,967

25.14.3 Defined values

Parameter	Type	Description
<socket>	Number	Socket identifier. The range goes from 0 to 6
<port>	Number	Port of service, range 1-65535. Port numbers below 1024 are not recommended since they are usually reserved
<ip_address>	String	Remote host IP address (only in URC +UUSOLI). For IP address format reference see the IP addressing.
<listening_socket>	Number	Socket identifier specified within the AT+USOLI command, indicates on which listening socket the connection has been accepted (only in +UUSOLI URC)
<local_ip_address>	String	TE IP address (only in +UUSOLI URC). For IP address format reference see the IP addressing.
<listening_port>	Number	Listening port that has accepted the connection. This port is specified within the AT +USOLI command (only in +UUSOLI URC)
<length>	Number	Data length received on the UDP listening socket (only in +UUSORF unsolicited indication). In order to know the sender IP address and port, use the AT+USORF command.

25.14.4 Notes

- In case of notification via the URC +UUSOLI <port> is intended as the remote port.

TOBY-L2 / MPCI-L2

- If the +UPSD command sets the PSD profile protocol type to IPv6, an IPv6 address shall be reported in the remote host and TE IP address.

SARA-G3

- The test command is not supported.

LEON-G1

- The range of <socket> parameter goes from 0 to 15.
- The test command is not supported.

25.15 Firewall control +UFRW

+UFRW						
Modules	LEON-G1					
Attributes	**Syntax**	**PIN required**	**Settings saved**	**Can be aborted**	**Response time**	**Error reference**
	full	No	No	No	-	+CME Error

25.15.1 Description

Enables/disables internal firewall and controls filtering settings (i.e. define IP white list). When enabled, IP connections are accepted only if the IP address belongs to the defined IP white list.

☞ The firewall applies for incoming connections only (i.e. listening sockets set by means of +USOLI command).

25.15.2 Syntax

Type	Syntax	Response	Example
Set	AT+UFRW=<action>[,<white_ip_addr_mask>]	OK	AT+UFRW=0 OK
Read	AT+UFRW?	+UFRW: <firewall_status>[,<white_ip_addr_mask1>[,<white_ip_addr_mask2>[,...]]] OK	
Test	AT+UFRW=?	+UFRW: (list of supported <action>s) OK	+UFRW: (0-4) OK

25.15.3 Defined values

Parameter	Type	Description
<action>	Number	• 0: disable internal firewall. The parameter <white_ip_addr_mask> is not allowed in this case: if present error message will be returned • 1: enable internal firewall. The parameter <white_ip_addr_mask> is not allowed in this case: if present error message will be returned • 2: add specified IP address mask to firewall white list. The parameter <white_ip_addr_mask> is mandatory. The maximum size of firewall white list is 10 IP address masks: up to 10 different IP address masks can be added to firewall white list. • 3: remove specified IP address mask from firewall white list. The parameter <white_ip_addr_mask> is mandatory • 4: clear firewall white list. The parameter <white_ip_addr_mask> is not allowed in this case: if present error message will be returned
<white_ip_addr_mask>	String	white IP address mask to be applied to remote end IP address to decide if to accept or not the remote connection. The IP address mask is made up of 4 bytes of information expressed as four numbers in range 0-255 separated by periods (e.g. "xxx.yyy.zzz.www"). An incoming connection attempt from the remote end IP address <incoming_ip_addr> is accepted if matching the following criterium for at least one of the IP address masks in the firewall white list: <incoming_ip_addr> & <white_ip_addr_mask> == <incoming_ip_addr>
<firewall_status>	Number	• 0: disabled • 1: enabled

25.16 HEX mode configuration +UDCONF=1

+UDCONF=1						
Modules	TOBY-L200-02S TOBY-L200-03A TOBY-L200-03S TOBY-L201 TOBY-L210-02S TOBY-L210-03A TOBY-L210-03S TOBY-L210-62S TOBY-L220 TOBY-L280 MPCI-L200-02S MPCI-L200-03S MPCI-L201 MPCI-L210-02S MPCI-L210-03S MPCI-L220 MPCI-L280					
	LARA-R2 TOBY-R2					
	SARA-U2 LISA-U2 LISA-U1					
	SARA-G4 SARA-G340 SARA-G350 SARA-G350-53S LEON-G1					
Attributes	**Syntax**	**PIN required**	**Settings saved**	**Can be aborted**	**Response time**	**Error reference**
	full	No	No	No	-	+CME Error

25.16.1 Description

Enables/disables the HEX mode for +USOWR, +USOST, +USORD and +USORF AT commands.

25.16.2 Syntax

Type	Syntax	Response	Example
Set	AT+UDCONF=1,<hex_mode_disable>	OK	AT+UDCONF=1,0 OK
Read	AT+UDCONF=1	+UDCONF: 1,<hex_mode_disable> OK	AT+UDCONF=1 +UDCONF: 1,1

Type	Syntax	Response	Example
			OK

25.16.3 Defined values

Parameter	Type	Description
<hex_mode_disable>	Number	Enables/disables the HEX mode for +USOWR, +USOST, +USORD and +USORF AT commands. Allowed values: • 0 (factory-programmed value): HEX mode disabled • 1: HEX mode enabled

25.17 Set socket in Direct Link mode +USODL

+USODL						
Modules	TOBY-L200-02S TOBY-L200-03A TOBY-L200-03S TOBY-L201 TOBY-L210-02S TOBY-L210-03A TOBY-L210-03S TOBY-L210-62S TOBY-L220 TOBY-L280 MPCI-L200-02S MPCI-L200-03S MPCI-L201 MPCI-L210-02S MPCI-L210-03S MPCI-L220 MPCI-L280					
	LARA-R2 TOBY-R2					
	SARA-U2 LISA-U2 LISA-U1					
	SARA-G4 SARA-G340 SARA-G350 SARA-G350-53S LEON-G1					
Attributes	**Syntax**	**PIN required**	**Settings saved**	**Can be aborted**	**Response time**	**Error reference**
	full	No	No	No	< 1 s	+CME Error

25.17.1 Description

Establishes a transparent end to end communication with an already connected TCP or UDP socket via the serial interface. The data can be sent to the socket and can be received via the serial interface: the HW flow control usage is strongly recommended to avoid data loss.

The transparent TCP/UDP connection mode can be exited via the +++ sequence, entered after at least 2 s of suspension of transmission to the port. The socket will remain connected and communication can be re-established any time.

The +UDCONF=5, +UDCONF=6, +UDCONF=7, +UDCONF=8 commands allow the configuration of UDP and TCP direct link triggers.

⚠ When using Direct Link with UDP sockets, if no network signal is available, outgoing UDP packet may be lost.

25.17.2 Syntax

Type	Syntax	Response	Example
Set	AT+USODL=<socket>	CONNECT	AT+USODL=0 CONNECT
Test	AT+USODL=?	+USODL: (list of supported <socket>s) OK	+USODL: (0-6) OK

25.17.3 Defined values

Parameter	Type	Description
<socket>	Number	Socket identifier. The range goes from 0 to 6.

25.17.4 Notes

SARA-U201-04A / SARA-U201-04B / SARA-U201-04X / SARA-U270-04B

- On the AUX UART interface, the command is not supported.

LISA-U200-00S / LISA-U200-01S / LISA-U230 / LISA-U260-01S / LISA-U270-01S

- The +UDCONF=2 and +UDCONF=3 commands allow the UDP direct link configuration.

LISA-U1

- During a 3G connection on the UART interface, the data rate must be at least 115200 b/s.
- The +UDCONF=2 and +UDCONF=3 commands allow UDP direct link configuration.

SARA-G3

- The test command is not supported.

SARA-G340-02S / SARA-G340-02X / SARA-G350-02A / SARA-G350-02S / SARA-G350-02X

- On the AUX UART interface, the command is not supported.

LEON-G1

- The UDP Direct Link is not supported.
- The range of <socket> parameter goes from 0 to 15.
- The test command is not supported.

25.17.5 Enhanced Direct Link

☞ LISA-U200-00S / LISA-U200-01S / LISA-U230 / LISA-U260-01S / LISA-U270-01S / LISA-U1 / LEON-G1
Not supported.

The enhanced DL functionality allows the user set up to three kinds of trigger for data transmission:

- Timer Trigger
- Data Length Trigger
- Character Trigger

The triggers can be applied independently to each socket. A socket may be set with more than one trigger.

The trigger must be set after the socket creation and before switching to direct link mode.

By default Timer Trigger and Data Length Trigger are enabled for UDP sockets.

By default no triggers are enabled for TCP sockets.

See the +UDCONF=5, +UDCONF=6, +UDCONF=7, +UDCONF=8 commands description for the transmission triggers configuration.

25.17.5.1 Timer Trigger (TT)

The user can configure a timeout for sending the data. The timer starts every time a character is read from the serial interface. When the timer expires, buffered data is sent.

The timer range is between 100 and 120000 ms; the special value 0 (zero) means that the timer is disabled.

By default the timer trigger is disabled for TCP sockets and enabled with a value of 500 ms for UDP sockets.

The +UDCONF=5 command can configure the timer trigger.

25.17.5.2 Data Length Trigger (DLT)

The user can configure a maximum buffered data length to reach before sending the data. When this length is reached the data is sent.

The minimum data length is 3, the maximum data length is 2048 bytes for TCP and 1472 bytes for UDP. If the data length is set to 0 (zero) the trigger is disabled (every data chunk received from the serial port is immediately sent to the network).

By default the data length trigger is disabled for TCP sockets and set to 1024 for UDP sockets.

The +UDCONF=6 command can configure the data length trigger.

25.17.5.3 Character Trigger (CT)

The user can configure a character that will trigger the data transmission. When the character is detected the data (including the trigger character) is sent.

If the specified character is -1, the character trigger is disabled.

By default it is disabled for both TCP and UDP sockets.

The +UDCONF=7 command can configure the character trigger.

25.17.5.4 Combined Triggers

The user can enable multiple triggers together. The triggers work with an OR logic. This means that the first trigger reached fires the data transmission.

25.17.5.5 About serial data chunks

A data chunk is the amount of data that SIO recognizes as a single data transmission.

☞ If the baud rate is lower than 115200 b/s the time to receive 255 characters is always calculated with timings for 115200 b/s.

SARA-G4 / SARA-G340 / SARA-G350 / LEON-G1

- A data transmission starts when the first byte is received and it finishes when no data is received in the time required for the reception of 255 bytes at the current serial port speed.

25.17.5.6 Data from the network

The data received from the network is immediately forwarded to the serial interface.

25.17.5.7 Congestion timer

Is it also possible to set a congestion timer after which, in case of network congestion, the module exits from direct link.

The timer range is between 1000 and 720000 ms, the special value 0 (zero) means that the timer is disabled.

By default the congestion timer is set to 60000 (60 s) for both TCP and UDP sockets.

The +UDCONF=8 command can configure the congestion timer.

25.18 UDP Direct Link Packet Size configuration +UDCONF=2

+UDCONF=2						
Modules	LISA-U200-00S LISA-U200-01S LISA-U230 LISA-U260-01S LISA-U270-01S LISA-U1					
Attributes	**Syntax**	**PIN required**	**Settings saved**	**Can be aborted**	**Response time**	**Error reference**
	full	No	No	No	-	+CME Error

25.18.1 Description

Set the packet size for the UDP direct link packet.

25.18.2 Syntax

Type	Syntax	Response	Example
Set	AT+UDCONF=2,<socket_id>,<packet_size>	OK	AT+UDCONF=2,1,1024 OK
Read	AT+UDCONF=2,<socket_id>	+UDCONF: 2,<socket_id>,<packet_size> OK	AT+UDCONF=2,1 +UDCONF: 2,1,1024 OK

25.18.3 Defined values

Parameter	Type	Description
<socket_id>	Number	Socket identifier; used when changing the UDP Direct Link settings. Valid range is 0-6
<packet_size>	Number	Packet size (in bytes) for UDP direct link; valid range is 100-1472; the factory-programmed value is 1024 bytes

25.19 UDP Direct Link Sending timer configuration +UDCONF=3

+UDCONF=3						
Modules	LISA-U200-00S LISA-U200-01S LISA-U230 LISA-U260-01S LISA-U270-01S LISA-U1					
Attributes	**Syntax**	**PIN required**	**Settings saved**	**Can be aborted**	**Response time**	**Error reference**
	full	No	No	No	-	+CME Error

25.19.1 Description

Configures the UDP direct link set sending timer.

25.19.2 Syntax

Type	Syntax	Response	Example
Set	AT+UDCONF=3,<socket_id>,<sending_timer_timeout>	OK	AT+UDCONF=3,1,1000 OK
Read	AT+UDCONF=3,<socket_id>	+UDCONF: 3,<socket_id>,<sending_timer_timeout> OK	AT+UDCONF=3,1 +UDCONF: 3,1,1000 OK

25.19.3 Defined values

Parameter	Type	Description
<socket_id>	Number	Socket identifier; used when changing the UDP Direct Link settings. Allowed range is 0-6
<sending_timer_timeout>	Number	Sending timer (in milliseconds) for UDP direct link; valid range is 100-120000; the default value is 1000 ms

25.20 Timer Trigger configuration for Direct Link +UDCONF=5

+UDCONF=5						
Modules	TOBY-L200-02S TOBY-L200-03A TOBY-L200-03S TOBY-L201 TOBY-L210-02S TOBY-L210-03A TOBY-L210-03S TOBY-L210-62S TOBY-L220 TOBY-L280 MPCI-L200-02S MPCI-L200-03S MPCI-L201 MPCI-L210-02S MPCI-L210-03S MPCI-L220 MPCI-L280					
	LARA-R2 TOBY-R2					
	SARA-U2 LISA-U200-02S LISA-U200-03S LISA-U200-52S LISA-U200-62S LISA-U200-83S LISA-U201 LISA-U260-02S LISA-U270-02S					
	SARA-G4 SARA-G340 SARA-G350 SARA-G350-53S					
Attributes	**Syntax**	**PIN required**	**Settings saved**	**Can be aborted**	**Response time**	**Error reference**
	full	No	No	No	-	+CME Error

25.20.1 Description

Sets the timer trigger of the interested socket identifier for the data transmission enhanced Direct Link.

25.20.2 Syntax

Type	Syntax	Response	Example
Set	AT+UDCONF=5,<socket_id>,<timer_trigger>	OK	AT+UDCONF=5,0,500 OK
Read	AT+UDCONF=5,<socket_id>	+UDCONF: 5,<socket_id>,<timer_trigger> OK	AT+UDCONF=5,0 +UDCONF: 5,0,500 OK

25.20.3 Defined values

Parameter	Type	Description
<socket_id>	Number	Socket identifier; used when changing the UDP Direct Link settings. The range is 0-6.
<timer_trigger>	Number	Enhanced Direct Link sending timer trigger (in milliseconds); valid range is 0, 100-120 000; the factory-programmed value is 500 ms for UDP, 0 for TCP, 0 means trigger disabled.

25.21 Data Length Trigger configuration for Direct Link +UDCONF=6

+UDCONF=6						
Modules	TOBY-L200-02S TOBY-L200-03A TOBY-L200-03S TOBY-L201 TOBY-L210-02S TOBY-L210-03A TOBY-L210-03S TOBY-L210-62S TOBY-L220 TOBY-L280 MPCI-L200-02S MPCI-L200-03S MPCI-L201 MPCI-L210-02S MPCI-L210-03S MPCI-L220 MPCI-L280					
	LARA-R2 TOBY-R2					
	SARA-U2 LISA-U200-02S LISA-U200-03S LISA-U200-52S LISA-U200-62S LISA-U200-83S LISA-U201 LISA-U260-02S LISA-U270-02S					
	SARA-G4 SARA-G340 SARA-G350 SARA-G350-53S					
Attributes	**Syntax**	**PIN required**	**Settings saved**	**Can be aborted**	**Response time**	**Error reference**
	full	No	No	No	-	+CME Error

25.21.1 Description

Sets the data length trigger of the interested socket identifier for the data transmission enhanced Direct Link.

25.21.2 Syntax

Type	Syntax	Response	Example
Set	AT+UDCONF=6,<socket_id>,<data_length_trigger>	OK	AT+UDCONF=6,0,1024 OK
Read	AT+UDCONF=6,<socket_id>	+UDCONF: 6,<socket_id>,<data_length_trigger> OK	AT+UDCONF=6,0 +UDCONF: 6,0,1024 OK

25.21.3 Defined values

Parameter	Type	Description
<socket_id>	Number	Socket identifier; used when changing the UDP Direct Link settings. Valid range is 0-6
<data_length_trigger>	Number	Enhanced Direct Link data length trigger in bytes, valid range is 0, 3 1472 for UDP and 0, 3-2048 for TCP, the factory-programmed value is 1024 for UDP, 0 for TCP, 0 means trigger disabled

25.22 Character trigger configuration for Direct Link +UDCONF=7

+UDCONF=7						
Modules	TOBY-L200-02S TOBY-L200-03A TOBY-L200-03S TOBY-L201 TOBY-L210-02S TOBY-L210-03A TOBY-L210-03S TOBY-L210-62S TOBY-L220 TOBY-L280 MPCI-L200-02S MPCI-L200-03S MPCI-L201 MPCI-L210-02S MPCI-L210-03S MPCI-L220 MPCI-L280					
	LARA-R2 TOBY-R2					
	SARA-U2 LISA-U200-02S LISA-U200-03S LISA-U200-52S LISA-U200-62S LISA-U200-83S LISA-U201 LISA-U260-02S LISA-U270-02S					
	SARA-G4 SARA-G340 SARA-G350 SARA-G350-53S					
Attributes	**Syntax**	**PIN required**	**Settings saved**	**Can be aborted**	**Response time**	**Error reference**
	full	No	No	No	-	+CME Error

25.22.1 Description

Sets the character trigger of the interested socket identifier for the data transmission enhanced Direct Link.

25.22.2 Syntax

Type	Syntax	Response	Example
Set	AT+UDCONF=7,<socket_id>,<character_trigger>	OK	AT+UDCONF=7,0,13 OK
Read	AT+UDCONF=7,<socket_id>	+UDCONF: 7,<socket_id>,<character_trigger> OK	AT+UDCONF=7,0 +UDCONF: 7,0,13 OK

25.22.3 Defined values

Parameter	Type	Description
<socket_id>	Number	Socket identifier; used when changing the Direct Link settings. The allowed range is 0-6
<character_trigger>	Number	Enhanced Direct Link character trigger, the value represents the ASCII code (in base 10) of the character to be used as character trigger. The allowed range is -1, 0-255, the factory-programmed value is -1; -1 means trigger disabled

25.23 Congestion timer configuration for Direct Link +UDCONF=8

+UDCONF=8						
Modules	TOBY-L200-02S TOBY-L200-03A TOBY-L200-03S TOBY-L201 TOBY-L210-02S TOBY-L210-03A TOBY-L210-03S TOBY-L210-62S TOBY-L220 TOBY-L280 MPCI-L200-02S MPCI-L200-03S MPCI-L201 MPCI-L210-02S MPCI-L210-03S MPCI-L220 MPCI-L280					
	LARA-R2 TOBY-R2					
	SARA-U2 LISA-U200-02S LISA-U200-03S LISA-U200-52S LISA-U200-62S LISA-U200-83S LISA-U201 LISA-U260-02S LISA-U270-02S					
	SARA-G4 SARA-G340 SARA-G350 SARA-G350-53S					
Attributes	**Syntax**	**PIN required**	**Settings saved**	**Can be aborted**	**Response time**	**Error reference**
	full	No	No	No	-	+CME Error

25.23.1 Description

Sets the congestion timer of the interested socket identifier for the data transmission enhanced Direct Link.

25.23.2 Syntax

Type	Syntax	Response	Example
Set	AT+UDCONF=8,<socket_id>,<congestion_timer>	OK	AT+UDCONF=8,0,120000

Type	Syntax	Response	Example
			OK
Read	AT+UDCONF=8,<socket_id>	+UDCONF: 8,<socket_id>,<congestion_timer> OK	AT+UDCONF=8,0 +UDCONF: 8,0,120000 OK

25.23.3 Defined values

Parameter	Type	Description
<socket_id>	Number	Socket identifier; used when changing the Direct Link settings. Valid range is 0-6
<congestion_timer>	Number	Enhanced Direct Link congestion timer (in milliseconds); valid range is 0, 1000-72000 0; the factory-programmed value is 60000, 0 means trigger disabled

25.24 Direct Link disconnect DSR line handling +UDCONF=10

+UDCONF=10						
Modules	LARA-R2 TOBY-R2					
	SARA-U201 SARA-U260-03S SARA-U270-03A SARA-U270-03S SARA-U270-04B SARA-U270-53S SARA-U270-73S SARA-U280-03S LISA-U200-03S LISA-U200-83S LISA-U201					
Attributes	**Syntax**	**PIN required**	**Settings saved**	**Can be aborted**	**Response time**	**Error reference**
	full	No	No	No	-	+CME Error

25.24.1 Description

The Direct Link functionality changes the DSR line state according to the &S configuration. If the &S configuration = 1 (default and factory programmed value), DSR line transitions will occur as follow:

- From LOW to HIGH when module enters into Direct Link mode
- From HIGH to LOW when module exits from Direct Link mode

The +UDCONF=10 command allows to configure the behaviour of the DSR line when the module exits from Direct Link. In fact, the transition (from HIGH to LOW) can be configured to occur prior to or after the output of the "<CR><LF>DISCONNECT<CR><LF>" string.

This command has no effect when the &S configuration = 0.

25.24.2 Syntax

Type	Syntax	Response	Example
Set	AT+UDCONF=10,<dl_dsr_line_behaviour>	OK	AT+UDCONF=10,1 OK
Read	AT+UDCONF=10	+UDCONF: 10,<dl_dsr_line_behaviour> OK	AT+UDCONF=10 +UDCONF: 10,1 OK

25.24.3 Defined values

Parameter	Type	Description
<dl_dsr_line_behaviour>	Number	Behaviour of the DSR transition when the module exits from Direct Link. Allowed values: • 0 (factory-programmed value): DSR line transition (HIGH to LOW) is performed after the output of the "<CR><LF>DISCONNECT<CR><LF>" string • 1: DSR line transition (HIGH to LOW) is performed before (~20 ms) the output of the "<CR><LF>DISCONNECT<CR><LF>" string

25.25 Socket control +USOCTL

+USOCTL						
Modules	TOBY-L200-02S TOBY-L200-03A TOBY-L200-03S TOBY-L201 TOBY-L210-02S TOBY-L210-03A TOBY-L210-03S TOBY-L210-62S TOBY-L220 TOBY-L280 MPCI-L200-02S MPCI-L200-03S MPCI-L201 MPCI-L210-02S MPCI-L210-03S MPCI-L220 MPCI-L280					
	LARA-R2 TOBY-R2					
	SARA-U2 LISA-U2 LISA-U1					
	SARA-G4 SARA-G340 SARA-G350 SARA-G350-53S LEON-G1					
Attributes	**Syntax**	**PIN required**	**Settings saved**	**Can be aborted**	**Response time**	**Error reference**
	partial	No	No	No	-	+CME Error

25.25.1 Description

Allows interaction with the low level socket layer.

25.25.2 Syntax

Type	Syntax	Response	Example
Set	AT+USOCTL=<socket>,<param_id>	+USOCTL: <socket>,<param_id>,<param_val>[,<param_val2>] OK	AT+USOCTL=0,2 +USOCTL: 0,2,38 OK
Test	AT+USOCTL=?	+USOCTL: (list of supported <socket>s),(list of supported <param_id>s) OK	+USOCTL: (0-6),(0-4,10-11) OK

25.25.3 Defined values

Parameter	Type	Description
<socket>	Number	Socket identifier. The range goes from 0 to 6.
<param_id>	Number	Control request identifier. Possible values are: • 0: query for socket type • 1: query for last socket error • 2: get the total amount of bytes sent from the socket • 3: get the total amount of bytes received by the socket • 4: query for remote peer IP address and port • 10: query for TCP socket status (only TCP sockets) • 11: query for TCP outgoing unacknowledged data (only TCP sockets) • 5-9, 12-99: RFU
<param_val>	Number / String	This value may assume different means depending on the <param_id> parameter. If <param_id>= 0, <param_val> can assume these values: • 6 TCP socket • 17: UDP socket If <param_id>= 1, <param_val> can assume these values: • N: last socket error If <param_id>= 2, <param_val> can assume these values: • N: the total amount (in bytes) of sent (acknowledged + unacknowledged) data If <param_id>= 3, <param_val> can assume these values: • N: the total amount (in bytes) of received (read) data If <param_id>= 4, <param_val> can assume these values: • A string representing the remote peer IP address expressed in dotted decimal form If <param_id>= 10, <param_val> can assume these values: • 0: the socket is in INACTIVE status (it corresponds to CLOSED status defined in RFC793 "TCP Protocol Specification" [112]) • 1: the socket is in LISTEN status • 2: the socket is in SYN_SENT status

Parameter	Type	Description
		• 3: the socket is in SYN_RCVD status • 4: the socket is in ESTABILISHED status • 5: the socket is in FIN_WAIT_1 status • 6: the socket is in FIN_WAIT_2 status • 7: the sokcet is in CLOSE_WAIT status • 8: the socket is in CLOSING status • 9: the socket is in LAST_ACK status • 10: the socket is in TIME_WAIT status If <param_id>= 11, <param_val> can assume these values: • N: the total amount of outgoing unacknowledged data
<param_val2>	Number	This value is present only when <param_id> is 4. It represents the remote peer IP port. For IP address format reference see the IP addressing.

25.25.4 Notes

TOBY-L2 / MPCI-L2

- If the +UPSD command sets the PSD profile protocol type to IPv6, an IPv6 address shall be reported in the remote peer IP address.

SARA-G3

- The test command is not supported.

LEON-G1

- The range of <socket> parameter goes from 0 to 15.
- The test command is not supported.

25.26 IP Change Notification +UIPCHGN

+UIPCHGN						
Modules	TOBY-L200-02S TOBY-L200-03A TOBY-L200-03S TOBY-L210-02S TOBY-L210-03A TOBY-L210-03S TOBY-L210-62S TOBY-L220 TOBY-L280 MPCI-L200-02S MPCI-L200-03S MPCI-L210-02S MPCI-L210-03S MPCI-L220 MPCI-L280					
	LARA-R2 TOBY-R2					
	SARA-U2 LISA-U200-02S LISA-U200-03S LISA-U200-52S LISA-U200-62S LISA-U200-83S LISA-U201 LISA-U260-02S LISA-U270-01S LISA-U270-62S LISA-U270-63S LISA-U270-68S					
	SARA-G4 SARA-G340 SARA-G350 SARA-G350-53S					
Attributes	**Syntax**	**PIN required**	**Settings saved**	**Can be aborted**	**Response time**	**Error reference**
	full	No	NVM	No	-	UUIPGHGN Error +CME Error

25.26.1 Description

Enable, disables or forces the IP change notification (CN) functionality. This command only works for internal PDP context activation.

☞ TOBY-L2 / MPCI-L2 / LARA-R2 / TOBY-R2 / SARA-U2 / LISA-U2 / SARA-G4 / SARA-G3
See +UPSD, +UPSDA and +UPSND AT commands for establishing a PSD connection.

☞ SARA-G3
See +UCSD, +UCSDA and +UCSND AT commands for establishing a CSD connection.

The IP CN notifies a remote server about changes in the module IP address.

The following information is delivered to the destination server:

- Current IP address of the module
- IMEI of the module (optional)
- IMSI of the inserted SIM card (optional)
- Username (optional)
- MD5 hash of user password (hex format) (optional)
- Custom information (up to 128 bytes)

The notification is sent via a HTTP GET request.

The GET request format is the following:

```
GET /<path>?myip=<ip>&imei=<imei>&imsi=<imsi>&user=<username>&pass=<md5paswd>&cust=<cust_info> HTTP/1.0{CRLF}
```

```
Host: <domain_name>{CRLF}
```

```
User-Agent: u-blox IP Change Notification Agent 1.0{CRLF}
```

```
{CRLF}
```

<ip>, <imei> (if enabled) and <imsi> (if enabled) fields inside the HTTP request are automatically inserted by the module, <domain_name>, <path>, <username>, <password> and <cust_info> fields must be provided by the application through the +UIPCHGN AT command.

{CRLF} is a placeholder for hexadecimal character 0x0D (CR) and 0x0A (LF).

The HTTP response from the server is parsed to recognize the HTTP response code and the text between the <ipchgn_r> and the </ipchgn_r> tags inside the response body. This text is not mandatory and can be freely customized by the customer (up to 64 printable characters).

A real world example follows:

Request (from the module)

```
GET        /modemipnotify.php?myip=123.56.214.2&imei=992237050009739&imsi=992105301545971&user=test_user&pass=
16ec1ebb01fe02ded9b7d5447d3dfc65&cust=Product%3A+Tracker+v.1.0 HTTP/1.0{CRLF}
```

```
Host: somedomain.com {CRLF}
```

```
User-Agent: u-blox IP Change Notification Agent 1.0{CRLF}
```

```
{CRLF}
```

Where

Field	Content	Comment
server	somedomain.com	Specified via +UIPCHGN AT command
path	modemipnotify.php	Specified via +UIPCHGN AT command
myip	123.56.214.2	
imei	992237050009739	
imsi	992105301545971	
user	test_user	Specified via +UIPCHGN AT command
pass	16ec1ebb01fe02ded9b7d5447d3dfc65	MD5 hash of "test_password"Specified via +UIPCHGN AT command
cust_info	Product%3A+Tracker+v.1.0	URL encoding of the string "Product: Tracker v.1.0". Specified via +UIPCHGN AT command

Response (from the server)

```
HTTP/1.0 200 OK {CRLF}
```

```
Content-Type: text/html {CRLF}
```

```
Content-Length: 31 {CRLF}
```

```
Connection: close {CRLF}
```

```
{CRLF}
```

```
<ipchgn_r>IP_UPDATED</ipchgn_r>
```

Another real world example (without custom information, username and password):

```
GET            /modemipnotify.php?myip=123.56.214.2&imei=992237050009739&imsi=992105301545971&user=&pass=&cust=
 HTTP/1.0{CRLF}
```

```
Host: somedomain.com {CRLF}
```

```
User-Agent: u-blox IP Change Notification Agent 1.0{CRLF}
```

```
{CRLF}
```

Where:

Field	Content	Comment
server	somedomain.com	
path	modemipnotify.php	
myip	123.56.214.2	
imei	992237050009739	
imsi	992105301545971	
user		(empty)
pass		(empty)
cust_info		(empty)

Response (from the server)

```
HTTP/1.0 200 OK {CRLF}
```

```
Content-Type: text/html {CRLF}
```

```
Content-Length: 31 {CRLF}
```

```
Connection: close {CRLF}
```

```
{CRLF}
```

```
<ipchgn_r>IP_UPDATED</ipchgn_r>
```

⚠ Password hashing and URL encoding are performed by the module, so parameters < password> and <cust_info> must be inserted in plain text in the +UIPCHGN command (See command parameters below).

The command configuration is stored in the NVM; if enabled, the command automatically works after a reboot and the +UUIPCHGN: 0 URC is sent to all terminals in this case.

If the IP CN feature is enabled, the notification is performed at each PDP context activation. If the client is enabled when a PDP connection is already active, it starts to update IP address on the next PDP context activation.

☞ The custom information field (< cust_info >) is URL encoded into the HTTP request, this means that the final custom information inside the HTTP GET request may be longer than 128 bytes.

☞ The IP CN feature only works for PDP connections configured and enabled by +UPSD and +UPSDA command.

☞ The username and password are not compulsory, but it is encouraged to use them for security reasons.

25.26.2 Syntax

Type	Syntax	Response	Example
Set	AT+UIPCHGN=<action>[,<server>,<port>,<path>,<send_imei>,<send_imsi>,<username>,<password>,<cust_info>]	OK	To enable the IP CN feature: AT+UIPCHGN=1,"somedomain.com",80,"modemipnotify.php",1,1,"test_user","test_password","Product: Tracker v.1.0" OK To force another IP CN to the remote server (CN must be previously enabled):

Type	Syntax	Response	Example
			AT+UIPCHGN=2 OK To disable the IP CN feature: AT+UIPCHGN=0 OK
Read	AT+UIPCHGN?	+UIPCHGN: <status>[,<server>,<port>,<path>,<send_imei>,<send_imsi>,<username>,<password>,<cust_info>] OK	+UIPCHGN: 1,"somedomain.com",80,"/modemipnotify.php",1,1,"test_user","test_password","Product: Tracker v.1.0" OK
Test	AT+UIPCHGN=?	+UIPCHGN: (list of supported <action>s),<server>,(list of supported <port>s),<path>,(list of supported <send_imei>s),(list of supported <send_imsi>s),<username>,<password>,<cust_info>) OK	+UIPCHGN: (0 2),"server",(1 65535),"path",(0 1),(0 1),"username","password","cust_info" OK
URC		+UUIPCHGN: <code>[,<reply_str>]	+UUIPCHGN: 200,"IP_UPDATED"

25.26.3 Defined values

Parameter	Type	Description
<action>	Number	Disable / Enable / Force the Update of IP CN feature • 0 (factory-programmed value): disable the feature • 1: enable the feature • 2: force IP notification update Note: < action > = 2 could be used when the +UUIPCHGN URC returns a code different from 200.
<server>	String	Indicates the remote host to which the HTTP GET request must be sent to notify the IP change event. It can be either a domain name (e.g. "somedomain.com") or an IP address in numeric format (e.g. "173.194.35.145"), always between double quotes. Maximum length: 64 characters Mandatory parameter with < action>=1, ignored with < action>=0 or < action>=2
<port>	Number	Indicates the server port to which the HTTP GET request must be sent. Valid range: from 1 to 65535 Mandatory parameter with < action> =1, ignored with < action> =0 or < action> =2
<path>	String	Indicates the server path to be used inside the HTTP GET request. The insertion of the starting "/" is not mandatory (the software automatically adds it if omitted). The string must be enclosed between double quotes. Maximum length: 64 characters Mandatory parameter with < action> =1, ignored with < action> =0 or < action> =2
<username>	String	Indicates the username to be sent inside the HTTP request. The string must be enclosed between double quotes. Max length: 64 characters Mandatory parameter with < action> =1, ignored with < action> =0 or < action> =2 If no username is required, this parameter must be inserted as empty string ("")
<send_imei>	Number	Indicates if the notification must send the modem IMEI inside the notification HTTP GET request • 0: do not send IMEI • 1: send IMEI Mandatory parameter with < action> =1, ignored with < action> =0 or < action> =2
<send_imsi>	Number	Indicates if the notification must send the modem IMSI inside the notification HTTP GET request

Parameter	Type	Description
		Valid range: 0-1 • 0: do not send IMSI • 1: send IMSI Mandatory parameter with < action> =1, ignored with < action> =0 or < action> =2
<password>	String	Indicates the password whose MD5 hash is to be sent inside the HTTP request. The string must be enclosed between double quotes. Maximum length: 32 characters Mandatory parameter with <action>=1, ignored with <action>=0 or <action>=2 If no password is required, this parameter must be inserted as empty string ("")
<cust_info>	String	Indicates the custom information to send inside the HTTP GET request. The string must be enclosed between double quotes. Maximum length: 128 characters Mandatory parameter with <action>=1, ignored with <action>=0 or <action>=2 If no custom information is required, this parameter must be inserted as empty string ("")
<status>	Number	This value indicates the status of the IP CN feature • 0: disabled • 1: enabled
<code>	Number	This is the code returned by the +UUIPCHGN URC. Values lower than 100 should be interpreted as internal error according to the IP CN error table. <code> values greater than 100 must be interpreted as HTTP server response code. If error is not present the code returned by the +UUIPCHGN should be 200. The +UUIPCHGN: 0 URC is sent to all terminals at boot if the IP CN feature is enabled from a previous working session.
<reply_str>	String	This is the text inserted between the <ipchgn_r> and </ipchgn_r> tags into the response body from the server. The string is enclosed between double quotes. The maximum length of this string is 64 bytes; if the server sends a longer string, it will be truncated. The parameter is only provided when the information is present in the HTTP response from the remote server and not if an internal error occurred.

25.27 Socket Always On +USOAO

+USOAO						
Modules	SARA-U2 LISA-U200-02S LISA-U200-03S LISA-U200-52S LISA-U200-62S LISA-U200-83S LISA-U201 LISA-U260-02S LISA-U270-02S LISA-U270-62S LISA-U270-63S LISA-U270-68S					
	SARA-G4 SARA-G340 SARA-G350 SARA-G350-53S					
Attributes	**Syntax**	**PIN required**	**Settings saved**	**Can be aborted**	**Response time**	**Error reference**
	full	No	NVM	No	- (except URC)	+CME Error

25.27.1 Description

Allows the configuration of the Socket Always On feature.

The Socket Always On (SAO) causes the module to try establishing an automatic Direct Link (DL) IP connection (or to start listening on an IP port, and in case establish a DL connection) over the UART interface as soon as the module is powered on, so that "dumb" terminals (equipments without the logic to send AT commands and parse the responses) can directly use an IP connection.

The Direct Link connection used by SAO cannot be established over the USB or SPI physical interfaces but over the UART physical interface only.

SAO may work in "client" and "server" modes:

- Client mode: the module establishes a Direct Link IP connection with a defined remote server
- Server mode: the module waits for an incoming connection request on a defined IP port; when an acceptable remote client is recognized, the Direct Link is established

For client mode, the user must specify these parameters:

- Internal PDP profile to be used for GPRS connection
- Destination host IP number or hostname
- Destination host port

For server mode, the user must specify these parameters:

- Internal PDP profile to be used for GPRS connection
- Listening port
- White list of remote hosts (optional)

If the feature is enabled, it starts working at the next module power on.

When using SAO in server mode and the network dynamically assigns an IP address (which is most often the case), then it is advisable to enable also the IP Change Notification feature to inform a remote server about the assigned IP address. See the +UIPCHGN command description.

When using SAO in server mode, the network dynamically assigns an IP address and the remote client uses an IP hostname rather than a numerical IP address to connect to the module, then it is advisable to enable the dynamic DNS feature. See the +UDYNDNS command description.

A usage example for client mode configuration follows:

AT command	Comment
PSD connection settings	
AT+UPSD=0,1,"your.apn"	Configures the APN for internal PDP profile 0; "your.apn" is an example
AT+UPSDA=0,1	Stores the parameters of PDP profile 0 to NVM
Socket Always On configuration	
AT+USOAO=1,0	Sets PDP profile 0 as default connection to be activated after module start-up
AT+USOAO=2,0	Sets client mode
AT+USOAO=3,"somehost.somedomain.com"	Sets the remote host for the TCP connection. The value can also be an IP address.
AT+USOAO=4,8084	Sets the remote port for the TCP connection
AT+USOAO=0,1	Enables the Socket Always On functionality.
AT+CPWROFF	Shuts down the module. On the next boot the functionality is active.
	After modem start-up (wait around 15 s)
+UUSOAOC: "122.26.56.55",8084	This is a notification of the connection establishment to the remote host. The IP address shown is the IP address got after the DNS resolution of the hostname. The IP shown here is for example purpose only. The module is connected in direct link mode (the data sent to the UART port is forwarded to the network and vice-versa). If the connection drops, it is automatically re established

A usage example for server mode configuration follows:

AT command	Comment
PSD connection settings	
AT+UPSD=0,1,"your.apn"	Configures the APN for internal PDP profile 0; "your.apn" is an example
AT+UPSDA=0,1	Stores the parameters of PDP profile 0 to NVM
Socket Always On configuration	
AT+USOAO=1,0	Sets PDP profile 0 as default connection to be activated after module start up
AT+USOAO=2,1	Sets server mode
AT+USOAO=4,2000	Sets the listening port
AT+USOAO=20,"143.22.33.0"	Sets the first host in white list (optional, up to 10 host can be added)
AT+USOAO=21,"143.22.33.1"	Sets the second host in white list (optional, up to 10 host can be added)

AT command	Comment
AT+USOAO=0,1	Enables the Socket Always On functionality. If any of the previous settings is not performed the command returns error.
AT+UIPCHGN=1,"somedomain.com",80, "modemipnotify.php",1,1,"test_user","test_password"	Configures the IP Change notification feature (optional but recommended for server mode). Refer to +UIPCHGN command description for details
AT+CPWROFF	Shuts down the module. On the next boot the functionality is active.
	After module start-up (wait around 15 s)
+UUIPCHGN: 200,"msg"	IP Change Notification result (it is not be prompted if IP change notification is disabled)
+UUSOAOL: "151.22.34.66",2000	Notifies the Socket Always On is enabled in server mode and listening on IP 151.22.34.66 and port 2000
	A new connection is accepted...
+UUSOAOC: "143.22.33.1",5996	Notifies a new connection has been accepted from IP 143.22.33.01 and port 5996. Now it is possible to exchange data with the remote host. The data sent to the UART port is forwarded to the network and vice-versa. If the remote host disconnects, the modem keeps in DL mode waiting for new incoming connections (which are not notified)

☞ The module never exits from direct link mode; if the remote client disconnects or the network is no longer available, the connection will be re-established automatically and transparently.

☞ In order for SAO to work, the following conditions must be true:
- the SIM PIN must be disabled, or the right PIN must be provided via the +USOAO=10 sub-command
- the UART must be correctly configured for speed (see the +IPR) and flow control (see the +IFC)
- the PSD connection parameters must be configured with the +UPSD command and stored in NVM
- the automatic or manual network registration must be enabled (see +COPS command description).

If any of the SAO settings are wrong (e.g. setting the server mode when using UDP protocol), the SAO can be enabled but will not start.

☞ When connected in server mode, if a new connection from an acceptable client address is received, the current connection is silently dropped and the new one is accepted.

☞ The Direct Link connection used by SAO is affected by the triggers (as specified in Enhanced Direct Link). If they are not explicitly modified, the default triggers will apply.

☞ When the module boots with SAO enabled, the PSD and TCP/IP commands cannot be reliably used (their functionalities are being used by the SAO). The only safe option is to disable SAO and reboot (with AT +USOAO=0,0 and AT+CPWROFF).

☞ When the module boots with SAO enabled, the MUX protocol (see +CMUX command description) must not be enabled on UART interface.

25.27.2 Syntax

Type	Syntax	Response	Example
Socket Always On generic syntax			
Set	AT+USOAO=<op_code>,<param1>	OK	AT+USOAO=0,1 OK
Read	AT+USOAO=<op_code>	+USOAO: <op_code>,<param1> OK	+USOAO: 0,1 OK
Enable/disable Socket Always On			
Set	AT+USOAO=0,<enable>	OK	AT+USOAO=0,1 OK
Read	AT+USOAO=0	+USOAO: 0,<enable> OK	+USOAO: 0,0 OK
PSD connection setting			

Type	Syntax	Response	Example
Set	AT+USOAO=1,<profile_id>	OK	AT+USOAO=1,5 OK
Read	AT+USOAO=1	+USOAO: 1,<profile_id> OK	+USOAO: 1,6 OK
Client or server mode configuration			
Set	AT+USOAO=2,<server_mode>	OK	AT+USOAO=2,0 OK
Read	AT+USOAO=2	+USOAO: 2,<server_mode> OK	+USOAO: 2,0 OK
Remote host (for client mode) configuration			
Set	AT+USOAO=3,<remote_host>	OK	AT+USOAO=3,"www.remotehost.it" OK
Read	AT+USOAO=3	+USOAO: 3,<remote_host> OK	+USOAO: 3,"www.remotehost.it" OK
IP port number configuration			
Set	AT+USOAO=4,<ip_port>	OK	AT+USOAO=4,8088 OK
Read	AT+USOAO=4	+USOAO: 4,<ip_port> OK	+USOAO: 4,8088 OK
IP protocol configuration			
Set	AT+USOAO=5,<protocol>	OK	AT+USOAO=5,17 OK
Read	AT+USOAO=5	+USOAO: 4,<protocol> OK	+USOAO: 5,17 OK
SIM PIN configuration			
Set	AT+USOAO=10,<pin>	OK	AT+USOAO=10,"123456" OK
Read	AT+USOAO=10	+USOAO: 10,******** OK	+USOAO: 10,******** OK
Set the i-th element of the white list of IP addresses (i=0..9)			
Set	AT+USOAO=20+i,<client_address>	OK	AT+USOAO=22,"123.156.0.2" OK
Read	AT+USOAO=20+i	+USOAO: 20+i,<client_address> OK	+USOAO: 22,"123.156.0.2" OK
Test	AT+USOAO=?	+USOAO: (list of supported <op_code>'s) OK	+USOAO: (0-5,10,20-29) OK
URC	(listening URC)	+UUSOAOL: <local_ip>,<local_port>	+UUSOAOL: "151.22.34.66",2000
URC	(connection URC)	+UUSOAOC: <remote_ip>,<remote_port>	+UUSOAOC: "122.26.56.55",8084

25.27.3 Defined values

Parameter	Type	Description
<op_code>	Number	Identifier of the meaning of the next parameter(s). Allowed values/ranges are: 0-5, 10 and 20-29. Meanings: • 0: enable/disable the socket always on feature • 1: configure the default PSD connection • 2: client/server mode • 3: remote host (for client mode only) • 4: remote host port for client mode or local listening port for server mode

Parameter	Type	Description
		• 5: socket type: UDP (for client mode only) or TCP • 10: SIM PIN • 20-29: white list items (for server mode only)
<enable>	Number	Configures the Socket Always On feature at the next power on: • 0 (factory-programmed value): feature disabled • 1: feature enabled
<profile_id>	Number	This is the same <profile_id> used in +UPSD command. Range between 0 and 6. The factory-programmed value is 0.
<server_mode>	Number	Defines the client or server module behavior. Allowed values: • 0 (factory-programmed value): client mode • 1: server mode
<remote_host>	String	The remote server IP address or hostname to connect to while in client mode. This value is ignored for server configuration. The factory-programmed value is an empty string (""").
<ip_port>	Number	In client mode it represents the remote port to connect to. In server mode it represents the local port on which the module must wait incoming connection. The range 1-65535. The factory-programmed value is 2000.
<protocol>	Number	Protocol type to be used for socket creation. Allowed values: • 6 (factory-programmed value): TCP • 17: UDP (not valid for server mode)
<pin>	String	SIM PIN: 4-to-8 characters long string of decimal digits. It is used if the SIM requires it and only if there are 3 attempts left. If empty, no PIN is attempted. The factory-programmed value is an empty string (no PIN). The PIN cannot be revealed - the read command AT+USOAO=10 only returns a string of asterisks "********".
<client_address>	String	An entry in the "white list" of remote clients IP addresses, in quoted numerical format (e.g. "123.45.67.89"). If the list is non-empty (i.e. it does not contain only null addresses), only connection requests from the listed addresses is accepted. An empty IP address ("0.0.0.0") is a null address. The factory-programmed value is an empty IP address.
<local_ip>	String	Local IP address. Only used in +UUSOAOL URC (when the module is in server mode).
<local_port>	Number	Local IP port. Range between 1 and 65535. Used only in +UUSOAOL URC (when the module is in server mode).
<remote_ip>	String	IP address of the remote host connected to the module. Used in +UUSOAOC URCs.
<remote_port>	Number	IP port of the remote host connected to the module. Range between 1 and 65535. Used in +UUSOAOC URCs
<param1>	Number	Type and supported content depend on the related <op_code> parameter; see the <op_code> specification

25.27.4 Notes

- +UUSOAOL and +UUSOAOC URCs are displayed only if the socket always on connection is active.
- +UUSOAOL URC is only displayed if socket always on is set in server mode.
- Only the UART interface displays +UUSOAOL and +UUSOAOC.

26 SSL/TLS

26.1 Introduction

SSL/TLS provides a secure connection between two entities using TCP socket for communication (i.e. HTTP/FTP server and HTTP/FTP client).

The SSL/TLS with digital certificates support provides different connection security aspects:

- **Server authentication**: use of the server certificate verification against a specific trusted certificate or a trusted certificates list;
- **Client authentication**: use of the client certificate and the corresponding private key;
- **Data security and integrity**: data encryption and Hash Message Authentication Code (HMAC) generation.

The security aspects used in the current connection depend on the SSL/TLS configuration and features supported by the communicating entities.

u-blox cellular modules support all the described aspects of SSL/TLS security protocol with these AT commands:

- AT+USECMNG: import, removal, list and information retrieval of certificates or private keys;
- AT+USECPRF: configuration of USECMNG (u-blox SECurity MaNaGement) profiles used for an SSL/TLS connection.

The USECMNG provides a default SSL/TLS profile which cannot be modified. The default USECMNG profile provides the following SSL/TLS settings:

Setting	Value	Meaning
Certificates validation level	Level 0	The server certificate will not be checked or verified.
Minimum SSL/TLS version	Any	The server can use any of the TLS1.0/TLS1.1/TLS1.2 versions for the connection.
Cipher suite	Automatic	The cipher suite will be negotiated in the handshake process.
Trusted root certificate internal name	"" (none)	No certificate will be used for the server authentication.
Expected server host-name	"" (none)	No server host-name is expected.
Client certificate internal name	"" (none)	No client certificate will be used.
Client private key internal name	"" (none)	No client private key will be used.

☞ The secure re-negotiation and the SSL/TLS session resumption are currently not supported, and if mandated by the server the SSL/TLS connection will fail with an Generic SSL/TLS handshake alert.

26.2 SSL/TLS certificates and private keys manager +USECMNG

+USECMNG						
Modules	TOBY-L200-02S TOBY-L200-03A TOBY-L200-03S TOBY-L201-02S TOBY-L210-02S TOBY-L210-03A TOBY-L210-03S TOBY-L210-62S TOBY-L220 TOBY-L280 MPCI-L200-02S MPCI-L200-03S MPCI-L201-02S MPCI-L210-02S MPCI-L210-03S MPCI-L220 MPCI-L280					
	LARA-R2 TOBY-R2					
	SARA-U201 SARA-U260-03S SARA-U270-03A SARA-U270-03S SARA-U270-04B SARA-U270-53S SARA-U270-73S SARA-U280-03S LISA-U200-03S LISA-U200-83S LISA-U201					
	SARA-G4 SARA-G340-02S SARA-G340-02X SARA-G350-02A SARA-G350-02S SARA-G350-02X SARA-G350-53S					
Attributes	**Syntax**	**PIN required**	**Settings saved**	**Can be aborted**	**Response time**	**Error reference**
	full	No	No	No	-	+CME Error

26.2.1 Description

Manages the X.509 certificates and private keys with the following functionalities:

- Import of certificates and private keys
- List and information retrieval of imported certificates and private keys

- Removal of certificates and private keys
- MD5 calculation of imported certificate or private key

☞ TOBY-L2 / MPCI-L2 / LARA-R2 / TOBY-R2 / SARA-U2 / LISA-U2 / SARA-G4 / SARA-G3
The command accepts certificates and private keys both in DER (Distinguished Encoding Rules) and in PEM (Privacy-Enhanced Mail) format. If the provided format is PEM, the imported certificate or private key will be automatically converted in DER format for the internal storage.
It is also possible to validate certificates and private keys.

☞ The certificates and private keys are kept in DER format and are not retrievable (i.e. cannot be downloaded from the module); for data validation purposes an MD5 hash string of the stored certificate or private key (stored in DER format) can be retrieved.

☞ Up to 16 certificates or private keys can be imported.

☞ Data for certificate or private key import can be provided with a stream of byte similar to +UDWNFILE or from a file stored on the FS.

☞ When using the stream of byte import functionality:
- If the data transfer is stopped before its competition, a guard timer of 20 s will ensure the termination of the data transmission. In this case the prompt will switch back in AT command mode and an error result code will be returned.
- If the module shuts down during the data transfer, all the bytes are discarded.
- If any error occurs during the data transfer, all bytes are discarded.

☞ TOBY-L2 / MPCI-L2 / LARA-R2 / TOBY-R2 / SARA-U2 / LISA-U2 / SARA-G3
Enable the RTS/CTS DTE flow control (see &K command description) before to import a stream of bytes.

☞ All the imported certificates or private keys are listed if the type of the security data is omitted.

☞ The imported certificates and private keys are:
- PERSISTED after the module FW is upgraded using +UFWINSTALL, +UFWSINSTALL or +UFWUPD AT commands.
- PERSISTED after a factory reset using +UFACTORY AT command.
- NOT PERSISTED after the module FW is upgraded using EasyFlash.

☞ The X.509 certificate DN (Distinguished Name) is composed of value fields which uniquely define an entity being authenticated. For security reasons some limitations (related to DN fields) described below are applied:
- The USECMNG import functionality allows the following DN value fields:
  - commonName (http://oid-info.com/get/2.5.4.3)
  - serialNumber (http://oid-info.com/get/2.5.4.5)
  - countryName (http://oid-info.com/get/2.5.4.6)
  - localityName (http://oid-info.com/get/2.5.4.7)
  - stateOrProvinceName (http://oid-info.com/get/2.5.4.8)
  - organizationName (http://oid-info.com/get/2.5.4.10)
  - organizationalUnitName (http://oid-info.com/get/2.5.4.11)
  - userID (http://oid-info.com/get/0.9.2342.19200300.100.1.1)
  - domainComponent (http://oid-info.com/get/0.9.2342.19200300.100.1.25)
  - pkcs9_emailAddress (http://oid-info.com/get/1.2.840.113549.1.9.1)
  - pkcs9_unstructuredName (http://oid-info.com/get/1.2.840.113549.1.9.2)
- The import of an X.509 certificate with DN containing other value fields (not in the above list) will result in an import error (error result code: USECMNG invalid certificate/key format).

26.2.2 Syntax

Type	Syntax	Response	Example
Generic syntax:			
Action	AT+USECMNG=<op_code>,[<type>[,<internal_name>[,<param1>[,<param2>]]]]	OK	-
Import a certificate or private key from serial I/O:			

Type	Syntax	Response	Example
Action	AT+USECMNG=0,<type>,<internal_name>,<data_size>[,<password>]	> Start transfer of data ... +USECMNG: 0,<type>,<internal_name>,<md5_string> OK	AT+USECMNG=0,0,"AddTrustCA",1327 >-----BEGIN CERTIFICATE----- (...other certificate data bytes...) +USECMNG: 0,0,"AddTrustCA","77107370ec4db40a08a6e36a64a1435b" OK
Import a certificate or private key from a file stored on FS:			
Action	AT+USECMNG=1,<type>,<internal_name>,<filename>[,<password>]	+USECMNG: 1,<type>,<internal_name>,<md5_string> OK	AT+USECMNG=1,0,"AddTrustCA","addtrust.cert" +USECMNG: 1,0,"AddTrustCA","77107370ec4db40a08a6e36a64a1435b" OK
Remove an imported certificate or private key:			
Action	AT+USECMNG=2,<type>,<internal_name>	OK	AT+USECMNG=2,0,"AddTrustCA" OK
List imported certificates or private keys:			
Read	AT+USECMNG=3[,<type>]	<cert_type>,<internal_name>[,<common_name>,<expiration_date>] ... OK	AT+USECMNG=3 "CA","AddTrustCA","AddTrust External CA Root","2020/05/30" "CA","GlobalSignCA","GlobalSign","2029/03/18" "CC","JohnDoeCC","GlobalSign","2010/01/01" "PK","JohnDoePK" OK
Retrieve the MD5 of an imported certificate or private key:			
Read	AT+USECMNG=4,<type>,<internal_name>	+USECMNG: 4,<type>,<internal_name>,<md5_string> OK	AT+USECMNG=4,0,"AddTrustCA" +USECMNG: 4,0,"AddTrustCA","77107370ec4db40a08a6e36a64a1435b" OK
Test	AT+USECMNG=?	+USECMNG: (list of supported <op_code>s),(list of supported <type>s) OK	+USECMNG: (0-4),(0-2) OK

26.2.3 Defined values

Parameter	Type	Description
<op_code>	Number	Type of operation: • 0: import a certificate or a private key (data provided by the stream of byte) • 1: import a certificate or a private key (data provided from a file on FS) • 2: remove an imported certificate or private key • 3: list imported certificates or private keys • 4: retrieve the MD5 of an imported certificate or private key
<type>	Number	Type of the security data: • 0: trusted root CA (certificate authority) certificate • 1: client certificate • 2: client private key • 3: RFU • 4: signature verification certificate • 5: signature verification public key
<cert_type>	String	Type of the security data in verbose format:

Parameter	Type	Description
		• "CA": trusted root CA (certificate authority) certificate • "CC": client certificate • "PK": client private key • "SC": server certificate • "VC": signature verification certificate • "PU": signature verification public key
<internal_name>	String	Unique identifier of an imported certificate or private key. If an existing name is used the data will be overridden. The maximum length is 200 characters.
<data_size>	Number	Size in bytes of a certificate or private key being imported. The maximum allowed size is 8192 bytes.
<password>	String	Decryption password; applicable only for PKCS8 encrypted client private keys. The maximum length is 128 characters.
<filename>	String	Name of the FS file containing the certificate or private key data to be imported. The maximum allowed file size is 8192 bytes.
<md5_string>	String	MD5 formatted string.
<common_name>	String	Certificate subject (issued to) common name; applicable only for trusted root and client certificates.
<expiration_date>	String	Certificate expiration (valid to date); applicable only for trusted root and client certificates.
<param1>	Number/ String	Type and supported content depend on the related <op_code> parameter; see the <op_code> specification.
<param2>	Number/ String	Type and supported content depend on the related <op_code> parameter; see the <op_code> specification.

26.2.4 Notes

TOBY-L201-02S / MPCI-L201-02S

- The command is not supported by TOBY-L201-02S-00 and MPCI-L201-02S-00.

TOBY-L200-02S / TOBY-L210-02S / TOBY-L210-62S / TOBY-L220 / TOBY-L280-02S / MPCI-L200 / MPCI-L210 / MPCI-L220 / MPCI-L280

- The USECMNG parameter <password> is not supported.
- The import of the following client private key format are not supported:
  - PKCS1 RSA formatted encrypted private key
  - PKCS8 unencrypted private key
  - PKCS8 encrypted private key

TOBY-L200-03S / TOBY-L210-03A / TOBY-L210-03S / TOBY-L280-03S

- The USECMNG parameter <password> is not supported by TOBY-L200-03S-00, TOBY-L210-03A-00, TOBY-L210-03S-00, TOBY-L280-03S-00.
- The import of the following client private key format are not supported by TOBY-L200-03S-00, TOBY-L210-03A-00, TOBY-L210-03S-00, TOBY-L280-03S-00:
  - PKCS1 RSA formatted encrypted private key
  - PKCS8 unencrypted private key
  - PKCS8 encrypted private key

LISA-U2 / SARA-G4 / SARA-G3

- The USECMNG parameter <password> is not supported.
- The import of the following client private key formats is not supported:
  - PKCS1 RSA formatted encrypted private key
  - PKCS8 unencrypted private key
  - PKCS8 encrypted private key

SARA-U201-03A / SARA-U201-03B / SARA-U201-03X / SARA-U201-63B / SARA-U260 / SARA-U270-00X / SARA-U270-03A / SARA-U270-03S / SARA-U270-53S / SARA-U270-73S / SARA-U280-03S

- The USECMNG parameter <password> is not supported.
- The import of the following client private key formats are not supported:
  - PKCS8 unencrypted private key
  - PKCS8 encrypted private key

- o PKCS1 RSA formatted encrypted private key

LARA-R2 / TOBY-R2

- The import of the following client private key format is not supported:
  - o PKCS1 RSA formatted encrypted private key
- When importing non-encrypted PKCS8 or PKCS1 private keys the USECMNG parameter <password> is ignored.

TOBY-L200-02S / TOBY-L210-02S / TOBY-L210-62S / TOBY-L220 / TOBY-L280-02S / MPCI-L200-02S / MPCI-L200-03S / MPCI-L210 / MPCI-L220 / MPCI-L280 / LARA-R2 / TOBY-R2 / SARA-U2 / LISA-U2 / SARA-G4 / SARA-G3

- The parameters:
  - o <type>= 3, 4, 5 are not supported.
  - o <cert_type>= "SC","VC","PU" are not supported.
- The imported certificates and private keys are:
  - o NOT PERSISTED (deleted) after the module FW is upgraded using +UFWINSTALL, +UFWSINSTALL or +UFWUPD AT commands.

TOBY-L200-03S / TOBY-L210-03A / TOBY-L210-03S / TOBY-L280-03S

- The parameters:
  - o <type>= 3, 4, 5 are not supported by TOBY-L200-03S-00, TOBY-L210-03S-00, TOBY-L210-03A-00, TOBY-L280-03S-00.
  - o <cert_type>= "SC","VC","PU" are not supported by TOBY-L200-03S-00, TOBY-L210-03S-00, TOBY-L210-03A-00, TOBY-L280-03S-00.
- On TOBY-L200-03S-00, TOBY-L210-03S-00, TOBY-L210-03A-00, TOBY-L280-03S-00 the imported certificates and private keys are:
  - o NOT PERSISTED (deleted) after the module FW is upgraded using +UFWINSTALL, +UFWSINSTALL or +UFWUPD AT commands.

26.3 SSL/TLS security layer profile manager +USECPRF

+USECPRF						
Modules	TOBY-L200-02S TOBY-L200-03A TOBY-L200-03S TOBY-L201-02S TOBY-L210-02S TOBY-L210-03A TOBY-L210-03S TOBY-L210-62S TOBY-L220 TOBY-L280 MPCI-L200-02S MPCI-L200-03S MPCI-L201-02S MPCI-L210-02S MPCI-L210-03S MPCI-L220 MPCI-L280					
	LARA-R2 TOBY-R2					
	SARA-U201 SARA-U260-03S SARA-U270-03A SARA-U270-03S SARA-U270-04B SARA-U270-53S SARA-U270-73S SARA-U280-03S LISA-U200-03S LISA-U200-83S LISA-U201					
	SARA-G4 SARA-G340-02S SARA-G340-02X SARA-G350-02A SARA-G350-02S SARA-G350-02X SARA-G350-53S					
Attributes	**Syntax**	**PIN required**	**Settings saved**	**Can be aborted**	**Response time**	**Error reference**
	partial	No	No	No	-	+CME Error

26.3.1 Description

Manages security profiles for the configuration of the following SSL/TLS connections properties:

- **Certificate validation level:**
  - o Level 0: no certificate validation; the server certificate will not be checked or verified. No additional certificates are needed.
  - o Level 1: certificate validation against a specific or a list of imported trusted root certificates.
  - o Level 2: certificate validation with an additional URL integrity check (the server certificate common name must match the server hostname).
  - o Level 3: certificate validation with an additional check on the certificate validity date.

  CA certificates should be imported with the +USECMNG AT command
- **Minimum SSL/TLS version to be used:**
  - o Any
  - o TLS 1.0
  - o TLS 1.1
  - o TLS 1.2

- **Exact cipher suite to be used** (the cipher suite register of Internet Assigned Numbers Authority (IANA) is provided in brackets):
  - (0x002f) TLS_RSA_WITH_AES_128_CBC_SHA
  - (0x003C) TLS_RSA_WITH_AES_128_CBC_SHA256
  - (0x0035) TLS_RSA_WITH_AES_256_CBC_SHA
  - (0x003D) TLS_RSA_WITH_AES_256_CBC_SHA256
  - (0x000a) TLS_RSA_WITH_3DES_EDE_CBC_SHA
  - (0x008c) TLS_PSK_WITH_AES_128_CBC_SHA
  - (0x008d) TLS_PSK_WITH_AES_256_CBC_SHA
  - (0x008b) TLS_PSK_WITH_3DES_EDE_CBC_SHA
  - (0x0094) TLS_RSA_PSK_WITH_AES_128_CBC_SHA
  - (0x0095) TLS_RSA_PSK_WITH_AES_256_CBC_SHA
  - (0x0093) TLS_RSA_PSK_WITH_3DES_EDE_CBC_SHA
  - (0x00ae) TLS_PSK_WITH_AES_128_CBC_SHA256
  - (0x00af) TLS_PSK_WITH_AES_256_CBC_SHA384
  - (0x00b6) TLS_RSA_PSK_WITH_AES_128_CBC_SHA256
  - (0x00b7) TLS_RSA_PSK_WITH_AES_256_CBC_SHA384

  See Table 78 for the applicability of cipher suite depending on the module series.
- **Additional cipher suite** to be used with IANA enumeration set command, see Syntax description:

IANA enumeration	Cipher suite description	Byte_1	Byte_2
0x0000	IANA_CS_REG_TLS_NULL_WITH_NULL_NULL	"00"	"00"
0x0004	IANA_CS_REG_TLS_RSA_WITH_RC4_128_MD5	"00"	"04"
0x0005	IANA_CS_REG_TLS_RSA_WITH_RC4_128_SHA	"00"	"05"
0x0009	IANA_CS_REG_TLS_RSA_WITH_DES_CBC_SHA	"00"	"09"
0x000A	IANA_CS_REG_TLS_RSA_WITH_3DES_EDE_CBC_SHA	"00"	"0A"
0x0015	IANA_CS_REG_TLS_DHE_RSA_WITH_DES_CBC_SHA	"00"	"15"
0x0016	IANA_CS_REG_TLS_DHE_RSA_WITH_3DES_EDE_CBC_SHA	"00"	"16"
0x001A	IANA_CS_REG_TLS_DH_anon_WITH_DES_CBC_SHA	"00"	"1A"
0x001B	IANA_CS_REG_TLS_DH_anon_WITH_3DES_EDE_CBC_SHA	"00"	"1B"
0x002F	IANA_CS_REG_TLS_RSA_WITH_AES_128_CBC_SHA	"00"	"2F"
0x0033	IANA_CS_REG_TLS_DHE_RSA_WITH_AES_128_CBC_SHA	"00"	"33"
0x0034	IANA_CS_REG_TLS_DH_anon_WITH_AES_128_CBC_SHA	"00"	"34"
0x0035	IANA_CS_REG_TLS_RSA_WITH_AES_256_CBC_SHA	"00"	"35"
0x0039	IANA_CS_REG_TLS_DHE_RSA_WITH_AES_256_CBC_SHA	"00"	"39"
0x003A	IANA_CS_REG_TLS_DH_anon_WITH_AES_256_CBC_SHA	"00"	"3A"
0x003C	IANA_CS_REG_TLS_RSA_WITH_AES_128_CBC_SHA256	"00"	"3C"
0x003D	IANA_CS_REG_TLS_RSA_WITH_AES_256_CBC_SHA256	"00"	"3D"
0x0067	IANA_CS_REG_TLS_DHE_RSA_WITH_AES_128_CBC_SHA256	"00"	"67"
0x0068	IANA_CS_REG_TLS_DH_DSS_WITH_AES_256_CBC_SHA256	"00"	"68"
0x0069	IANA_CS_REG_TLS_DH_RSA_WITH_AES_256_CBC_SHA256	"00"	"69"
0x006A	IANA_CS_REG_TLS_DHE_DSS_WITH_AES_256_CBC_SHA256	"00"	"6A"
0x006B	IANA_CS_REG_TLS_DHE_RSA_WITH_AES_256_CBC_SHA256	"00"	"6B"
0x006C	IANA_CS_REG_TLS_DH_anon_WITH_AES_128_CBC_SHA256	"00"	"6C"
0x006D	IANA_CS_REG_TLS_DH_anon_WITH_AES_256_CBC_SHA256	"00"	"6D"
0x008B	IANA_CS_REG_TLS_PSK_WITH_3DES_EDE_CBC_SHA	"00"	"8B"
0x008C	IANA_CS_REG_TLS_PSK_WITH_AES_128_CBC_SHA	"00"	"8C"
0x008D	IANA_CS_REG_TLS_PSK_WITH_AES_256_CBC_SHA	"00"	"8D"
0x008F	IANA_CS_REG_TLS_DHE_PSK_WITH_3DES_EDE_CBC_SHA	"00"	"8F"
0x0090	IANA_CS_REG_TLS_DHE_PSK_WITH_AES_128_CBC_SHA	"00"	"90"
0x0091	IANA_CS_REG_TLS_DHE_PSK_WITH_AES_256_CBC_SHA	"00"	"91"
0x0093	IANA_CS_REG_TLS_RSA_PSK_WITH_3DES_EDE_CBC_SHA	"00"	"93"
0x0094	IANA_CS_REG_TLS_RSA_PSK_WITH_AES_128_CBC_SHA	"00"	"94"
0x0095	IANA_CS_REG_TLS_RSA_PSK_WITH_AES_256_CBC_SHA	"00"	"95"
0x00A8	IANA_CS_REG_TLS_PSK_WITH_AES_128_GCM_SHA256	"00"	"A8"
0x00A9	IANA_CS_REG_TLS_PSK_WITH_AES_256_GCM_SHA384	"00"	"A9"

IANA enumeration	Cipher suite description	Byte_1	Byte_2
0x00AA	IANA_CS_REG_TLS_DHE_PSK_WITH_AES_128_GCM_SHA256	"00"	"AA"
0x00AB	IANA_CS_REG_TLS_DHE_PSK_WITH_AES_256_GCM_SHA384	"00"	"AB"
0x00AC	IANA_CS_REG_TLS_RSA_PSK_WITH_AES_128_GCM_SHA256	"00"	"AC"
0x00AD	IANA_CS_REG_TLS_RSA_PSK_WITH_AES_256_GCM_SHA384	"00"	"AD"
0x00AE	IANA_CS_REG_TLS_PSK_WITH_AES_128_CBC_SHA256	"00"	"AE"
0x00AF	IANA_CS_REG_TLS_PSK_WITH_AES_256_CBC_SHA384	"00"	"AF"
0x00B2	IANA_CS_REG_TLS_DHE_PSK_WITH_AES_128_CBC_SHA256	"00"	"B2"
0x00B3	IANA_CS_REG_TLS_DHE_PSK_WITH_AES_256_CBC_SHA384	"00"	"B3"
0x00B6	IANA_CS_REG_TLS_RSA_PSK_WITH_AES_128_CBC_SHA256	"00"	"B6"
0x00B7	IANA_CS_REG_TLS_RSA_PSK_WITH_AES_256_CBC_SHA384	"00"	"B7"
0xC003	IANA_CS_REG_TLS_ECDH_ECDSA_WITH_3DES_EDE_CBC_SHA	"C0"	"03"
0xC004	IANA_CS_REG_TLS_ECDH_ECDSA_WITH_AES_128_CBC_SHA	"C0"	"04"
0xC005	IANA_CS_REG_TLS_ECDH_ECDSA_WITH_AES_256_CBC_SHA	"C0"	"05"
0xC008	IANA_CS_REG_TLS_ECDHE_ECDSA_WITH_3DES_EDE_CBC_SHA	"C0"	"08"
0xC009	IANA_CS_REG_TLS_ECDHE_ECDSA_WITH_AES_128_CBC_SHA	"C0"	"09"
0xC00A	IANA_CS_REG_TLS_ECDHE_ECDSA_WITH_AES_256_CBC_SHA	"C0"	"0A"
0xC00D	IANA_CS_REG_TLS_ECDH_RSA_WITH_3DES_EDE_CBC_SHA	"C0"	"0D"
0xC00E	IANA_CS_REG_TLS_ECDH_RSA_WITH_AES_128_CBC_SHA	"C0"	"0E"
0xC00F	IANA_CS_REG_TLS_ECDH_RSA_WITH_AES_256_CBC_SHA	"C0"	"0F"
0xC012	IANA_CS_REG_TLS_ECDHE_RSA_WITH_3DES_EDE_CBC_SHA	"C0"	"12"
0xC013	IANA_CS_REG_TLS_ECDHE_RSA_WITH_AES_128_CBC_SHA	"C0"	"13"
0xC014	IANA_CS_REG_TLS_ECDHE_RSA_WITH_AES_256_CBC_SHA	"C0"	"14"
0xC017	IANA_CS_REG_TLS_ECDH_anon_WITH_3DES_EDE_CBC_SHA	"C0"	"17"
0xC018	IANA_CS_REG_TLS_ECDH_anon_WITH_AES_128_CBC_SHA	"C0"	"18"
0xC019	IANA_CS_REG_TLS_ECDH_anon_WITH_AES_256_CBC_SHA	"C0"	"19"
0xC023	IANA_CS_REG_TLS_ECDHE_ECDSA_WITH_AES_128_CBC_SHA256	"C0"	"23"
0xC024	IANA_CS_REG_TLS_ECDHE_ECDSA_WITH_AES_256_CBC_SHA384	"C0"	"24"
0xC025	IANA_CS_REG_TLS_ECDH_ECDSA_WITH_AES_128_CBC_SHA256	"C0"	"25"
0xC026	IANA_CS_REG_TLS_ECDH_ECDSA_WITH_AES_256_CBC_SHA384	"C0"	"26"
0xC027	IANA_CS_REG_TLS_ECDHE_RSA_WITH_AES_128_CBC_SHA256	"C0"	"27"
0xC028	IANA_CS_REG_TLS_ECDHE_RSA_WITH_AES_256_CBC_SHA384	"C0"	"28"
0xC029	IANA_CS_REG_TLS_ECDH_RSA_WITH_AES_128_CBC_SHA256	"C0"	"29"
0xC02A	IANA_CS_REG_TLS_ECDH_RSA_WITH_AES_256_CBC_SHA384	"C0"	"2A"
0xC02B	IANA_CS_REG_TLS_ECDHE_ECDSA_WITH_AES_128_GCM_SHA256	"C0"	"2B"
0xC02C	IANA_CS_REG_TLS_ECDHE_ECDSA_WITH_AES_256_GCM_SHA384	"C0"	"2C"
0xC02D	IANA_CS_REG_TLS_ECDH_ECDSA_WITH_AES_128_GCM_SHA256	"C0"	"2D"
0xC02E	IANA_CS_REG_TLS_ECDH_ECDSA_WITH_AES_256_GCM_SHA384	"C0"	"2E"
0xC02F	IANA_CS_REG_TLS_ECDHE_RSA_WITH_AES_128_GCM_SHA256	"C0"	"2F"
0xC030	IANA_CS_REG_TLS_ECDHE_RSA_WITH_AES_256_GCM_SHA384	"C0"	"30"
0xC031	IANA_CS_REG_TLS_ECDH_RSA_WITH_AES_128_GCM_SHA256	"C0"	"31"
0xC032	IANA_CS_REG_TLS_ECDH_RSA_WITH_AES_256_GCM_SHA384	"C0"	"32"
0xC0AE	IANA_CS_REG_TLS_ECDHE_ECDSA_WITH_AES_128_CCM_8	"C0"	"AE"

Table 76: Additional cipher suite

- **Certificate to be used for server and mutual authentication:**
  - The trusted root certificate. The CA certificate should be imported with the AT+USECMNG command.
  - The client certificate that should be imported with the AT+USECMNG command.
  - The client private key that should be imported with the AT+USECMNG command.
- **Expected server hostname, when using certificate validation level 2 or 3.**
- **Password for the client private key, if it is password protected.**
- **Pre-shared key used for connection. Defines a pre-shared key and key-name (PSK), when a TLS_PSK_* cipher suite is used.**
- **SNI (Server Name Indication).** SNI is a feature of SSL/TLS which uses an additional SSL/TLS extension header to specify the server name to which the client is connecting to. The extension was introduced to support the certificate handling used with virtual hosting provided by the various SSL/TLS enabled servers

mostly in cloud based infrastructures. With the SNI a server has the opportunity to present a different server certificate (or/and whole SSL/TLS configuration) based on the host indicated by the SNI extension.

Table 77 provides the list the applicability of SSL connection properties depending on the module series.

	Certificate validation level	Minimum SSL/TLS version	Cipher suite	Trusted root certificate internal name	Expected server hostname	Password for the client private key	Pre-shared key used for connection	SNI
TOBY-L2 MPCI-L2	*	*	*	*	*	*	*	*
LARA-R2 TOBY-R2	*	*	*	*	*	*	*	
SARA-U2 LISA-U2	*	*	*	*	*	*	*	*
SARA-G3	*	*	*	*	*	*	*	*
SARA-G4	*	*	*	*	*	*	*	*

Table 77: SSL/TLS connections properties applicability

☞ To set all the parameters in security profile, a set command for each <op_code> needs to be issued (e.g. certificate validation level, minimum SSL/TLS version, ...).

☞ To reset (set to factory-programmed value) all the parameters of a specific security profile, issue the AT +USECPRF=<profile_id> command.

26.3.2 Syntax

Type	Syntax	Response	Example
Generic syntax			
Set	AT+USECPRF=<profile_id>[,<op_code>[,<param_val>]]	OK	AT+USECPRF=0,0,0 OK
Cipher suite selection using IANA enumeration			
Set	AT+USECPRF=<profile_id>,2,99,<byte_1>,<byte_2>	OK	AT+USECPRF=0,2,99,"C0","2B" OK
Server certificate pinning			
Set	AT+USECPRF=<profile_id>,12,<param_val>,<pinning_level>	OK	AT+USECPRF=0,12,"my_srv_cert",0 OK
Read	AT+USECPRF=<profile_id>,<op_code>	+USECPRF: <profile_id>,<op_code>,<param_val> OK	AT+USECPRF=0,0 +USECPRF: 0,0,0 OK
Test	AT+USECPRF=?	+USECPRF: (list of supported <profile_id>s),(list of supported <op_code>s) OK	+USECPRF: (0-4),(0-6) OK

26.3.3 Defined values

Parameter	Type	Description
<profile_id>	Number	USECMNG security profile identifier, in range 0-4; if it is not followed by other parameters the profile settings will be reset (set to factory-programmed value).
<op_code>	Number	• 0: certificate validation level; allowed values for <param_val>: o 0 (factory-programmed value): Level 0 - No validation; the server certificate will not be checked or verified. The server in this case is not authenticated.

Parameter	Type	Description
		o 1: Level 1 - Root certificate validation without URL integrity check. The server certificate will be verified with a specific trusted certificates or with each of the imported trusted root certificates. o 2: Level 2 - Root certificate validation with URL integrity check. Level 1 validation with an additional URL integrity check. o 3: Level 3 - Root certificate validation with check of certificate validity date. Level 2 validation with an additional check of certificate validity date. • 1: SSL/TLS version to use; allowed values for <param_val>: o 0 (factory-programmed value): any; server can use any version for the connection. o 1: TLSv1.0; connection allowed only to TLS/SSL servers which support TLSv1.0 o 2: TLSv1.1; connection allowed only to TLS/SSL servers which support TLSv1.1 o 3: TLSv1.2; connection allowed only to TLS/SSL servers which support TLSv1.2 • 2: cipher suite; allowed values for <param_val> define which cipher suite will be used: o 0 (factory-programmed value): (0x0000) Automatic the cipher suite will be negotiated in the handshake process o 1: (0x002f) TLS_RSA_WITH_AES_128_CBC_SHA o 2: (0x003C) TLS_RSA_WITH_AES_128_CBC_SHA256 o 3: (0x0035) TLS_RSA_WITH_AES_256_CBC_SHA o 4: (0x003D) TLS_RSA_WITH_AES_256_CBC_SHA256 o 5: (0x000a) TLS_RSA_WITH_3DES_EDE_CBC_SHA o 6: (0x008c) TLS_PSK_WITH_AES_128_CBC_SHA o 7: (0x008d) TLS_PSK_WITH_AES_256_CBC_SHA o 8: (0x008b) TLS_PSK_WITH_3DES_EDE_CBC_SHA o 9: (0x0094) TLS_RSA_PSK_WITH_AES_128_CBC_SHA o 10: (0x0095) TLS_RSA_PSK_WITH_AES_256_CBC_SHA o 11: (0x0093) TLS_RSA_PSK_WITH_3DES_EDE_CBC_SHA o 12: (0x00ae) TLS_PSK_WITH_AES_128_CBC_SHA256 o 13: (0x00af) TLS_PSK_WITH_AES_256_CBC_SHA384 o 14: (0x00b6) TLS_RSA_PSK_WITH_AES_128_CBC_SHA256 o 15: (0x00b7) TLS_RSA_PSK_WITH_AES_256_CBC_SHA384 o 99: cipher suite selection using IANA enumeration, <byte_1> and <byte_2> are strings containing the 2 bytes that compose the IANA enumeration, see Table 76. • 3: trusted root certificate internal name; o <param_val> (string) is the internal name identifying a trusted root certificate; the maximum length is 200 characters. The factory-programmed value is an empty string. • 4: expected server hostname; o <param_val> (string) is the hostname of the server, used when certificate validation level is set to Level 2; the maximum length is 256 characters. The factory-programmed value is an empty string. • 5: client certificate internal name; o <param_val> (string) is the internal name identifying a client certificate to be sent to the server; the maximum length is 200 characters. The factory-programmed value is an empty string. • 6: client private key internal name; o <param_val> (string) is the internal name identifying a private key to be used; the maximum length is 200 characters. The factory-programmed value is an empty string. • 7: client private key password; o <param_val> (string) is the password for the client private key if it is password protected; the maximum length is 128 characters. The factory-programmed value is an empty string. • 8: pre-shared key; o <param_val> (string) is the pre-shared key used for connection; the maximum length is 64 characters. The factory-programmed value is an empty string. • 9: pre-shared key name; o <param_val> (string) is the pre-shared key name used for connection; the maximum length is 128 characters. The factory-programmed value is an empty string. • 10: SNI (Server Name Indication); o <param_val> (string) value for the additional negotiation header SNI (Server Name Indication) used in SSL/TLS connection negotiation; the maximum length is 128 characters. The factory-programmed value is an empty string. • 11: RFU

Parameter	Type	Description
		• 12: Server certificate pinning; o <param_val> (string) internal name identifying a certificate configured to be used for server certificate pinning; the maximum length is 200 characters. The factory-programmed value is an empty string. o <pinning_level> defines the certificate pinning information level. Allowed values for <pinning_level> - 0: pinning based on information comparison of received and configured certificate public key - 1: pinning based on binary comparison of received and configured certificate public key - 2: pinning based on binary comparison of received and configured certificate
<byte_1>	String	First byte of IANA cipher suite enumeration
<byte_2>	String	Second byte of IANA cipher suite enumeration

26.3.4 Notes

•

	TLS_RSA_WITH_AES_128_CBC_SHA	TLS_RSA_WITH_AES_128_CBC_SHA256	TLS_RSA_WITH_AES_256_CBC_SHA	TLS_RSA_WITH_AES_256_CBC_SHA256	TLS_RSA_WITH_3DES_EDE_CBC_SHA	TLS_PSK_WITH_AES_128_CBC_SHA	TLS_PSK_WITH_AES_256_CBC_SHA	TLS_PSK_WITH_3DES_EDE_CBC_SHA	TLS_RSA_PSK_WITH_AES_128_CBC_SHA	TLS_RSA_PSK_WITH_AES_256_CBC_SHA	TLS_RSA_PSK_WITH_3DES_EDE_CBC_SHA	TLS_PSK_WITH_AES_128_CBC_SHA256	TLS_PSK_WITH_AES_256_CBC_SHA384	TLS_RSA_PSK_WITH_AES_128_CBC_SHA256	TLS_RSA_PSK_WITH_AES_256_CBC_SHA384
TOBY-L2 MPCI-L2	*	*	*	*	*	*	*	*	*	*	*	*	*	*	*
LARA-R2 TOBY-R2	*	*	*	*	*	*	*	*	*	*	*	*	*	*	
SARA-U2 LISA-U2	*	*	*	*	*	*	*	*	*	*	*	*	*	*	*
SARA-G3	*	*	*	*	*	*	*	*	*	*	*	*	*	*	*
SARA-G4	*	*	*	*	*	*	*	*	*	*	*	*	*	*	*

Table 78: Cipher suite applicability

LARA-R2 / TOBY-R2 / SARA-U2 / LISA-U2 / SARA-G4 / SARA-G3

- <op_code>=12 (server certificate pinning) is not supported.
- <param_val>=99 (cipher suite selection using IANA enumeration) is not supported.

LARA-R2 / TOBY-R2 / SARA-U201-03A / SARA-U201-03B / SARA-U201-03X / SARA-U260 / SARA-U270 / SARA-U280 / LISA-U2 / SARA-G4 / SARA-G3

- <op_code>=10 is not supported.
- The SSL/TLS security profile does not support the configuration of SNI (Server Name Indication) SSL/TLS negotiation headers. When SNI is not used the modules might receive a non host specific SSL/TLS configuration (version/cipher suites/certificate) when used with virtual hosts.

SARA-U201-63B

- <op_code>=10 is not supported by SARA-U201-63B-00 and SARA-U201-63B-01.
- The SSL/TLS security profile does not support the configuration of SNI (Server Name Indication) SSL/TLS negotiation headers. When SNI is not used the modules might receive a non host specific SSL/TLS configuration (version/cipher suites/certificate) when used with virtual hosts.

TOBY-L201-02S / MPCI-L201-02S

- The command is not supported by TOBY-L201-02S-00 and MPCI-L201-02S-00.

TOBY-L200-02S / TOBY-L210-02S / TOBY-L210-62S / TOBY-L220 / TOBY-L280-02S / MPCI-L200 / MPCI-L210 / MPCI-L220 / MPCI-L280

- <op_code>=7, 10 are not supported.

MPCI-L200-02S / MPCI-L200-03S / MPCI-L210-02S / MPCI-L210-03S / MPCI-L220 / MPCI-L280

- <op_code>=12 (server certificate pinning) is not supported.
- <param_val>=99 (cipher suite selection using IANA enumeration).

TOBY-L200-03S / TOBY-L210-03A / TOBY-L210-03S / TOBY-L280-03S

- <op_code>=7, 10 are not supported by TOBY-L200-03S-00, TOBY-L210-03S-00, TOBY-L210-03A-00, TOBY-L280-03S-00.
- <op_code>=12 (server certificate pinning) is not supported by TOBY-L200-03S-00, TOBY-L210-03S-00, TOBY-L280-03S-00, TOBY-L210-03A-00.
- <param_val>=99 (cipher suite selection using IANA enumeration) is not supported by TOBY-L200-03S-00, TOBY-L210-03S-00, TOBY-L280-03S-00, TOBY-L210-03A-00.

SARA-U260 / SARA-U270 / SARA-U280 / LISA-U2 / SARA-G4 / SARA-G3

- <op_code>=7 is not supported.

SARA-U260 / SARA-U270 / SARA-U280 / LISA-U2

- The <op_code>=3 with a specific Root CA internal name is supported for certificates issued directly from Root certificate authorities without intermediate certificate authorities. For the certificates issued by intermediate authorities the <param_val> parameter should be omitted.

26.4 Data encryption configuration +USECCFG

+USECCFG						
Modules	TOBY-L200-03A TOBY-L200-03S TOBY-L201-02S TOBY-L210-03A TOBY-L210-03S TOBY-L280-03A TOBY-L280-03S MPCI-L201-02S					
Attributes	**Syntax**	**PIN required**	**Settings saved**	**Can be aborted**	**Response time**	**Error reference**
	full	No	No	No	-	+CME Error

26.4.1 Description

Configures and enables the password encryption for the stored security data managed by +USECMNG AT command. The factory-programmed configuration is encryption disabled, a password must be entered in order to enable the encryption.

After the enabling of the data encryption the +UFWINSTALL and +UFWUPD AT commands will provide an error result code (CME ERROR: 4 / CME ERROR: not supported); only +UFWSINSTALL AT command can be issued to perform a FW installation procedure.

The process of enabling encryption is irreversible: it is not possible to disable encryption or modify the entered password after having enabled the encryption. All certificates which were imported (with the +USECMNG AT command before the encryption was enabled) can not be used after the encryption is enabled and can be removed.

26.4.2 Syntax

Type	Syntax	Response	Example
Generic syntax			
Set	AT+USECCFG=<op_code>[,<param1>[,<param2>]]	OK	AT+USECCFG=0,1,"my_pwd" OK
Read	AT+USECCFG=<op_code>	+USECCFG: <op_code>,<param1>[,<param2>] OK	AT+USECCFG=0 +USECCFG: 0,0 OK
Encryption configuration			
Set	AT+USECCFG=0,1,<password>	OK	AT+USECCFG=0,1,"my_password" OK
Read	AT+USECCFG=0	+USECCFG: 0,<encyption_status> OK	AT+USECCFG=0 +USECCFG: 0,1

Type	Syntax	Response	Example
			OK
Test	AT+USECCFG=?	+USECCFG: (list of supported <op_code>s),(list of supported <param1> values) OK	+USECCFG: (0),(0-1) OK

26.4.3 Defined values

Parameter	Type	Description
<op_code>	Number	• 0: configure encryption
<password>	String	Password; the maximum accepted length is 128 characters. It is used for encrypting data.
<encyption_status>	Number	• 0 (factory-programmed value): encryption disabled • 1: encryption enabled
<param1>	Number	Content depends on the related <op_code> parameter (see above).
<param2>	String	Content depends on the related <op_code> parameter (see above).

26.4.4 Notes

TOBY-L200-03S / TOBY-L201-02S / TOBY-L210-03A / TOBY-L210-03S / TOBY-L280-03S / MPCI-L201-02S

- The command is not supported by TOBY-L200-03S-00, TOBY-L201-02S-00, TOBY-L210-03S-00, TOBY-L210-03A-00, TOBY-L280-03S-00, MPCI-L201-02S-00.

26.5 AT+USECMNG command example

☞ TOBY-L2 / MPCI-L2 / LARA-R2 / TOBY-R2 / SARA-U2 / LISA-U2 / SARA-G4 / SARA-G3

Here below is reported an example with a PEM encoded trusted root certificate.

Command	Response	Description
Step 1: Import a trusted root certificate using the stream of byte similar to +UDWNFILE		
AT+USECMNG=0,0,"ThawteCA",1516	>	Start the data transfer using the stream of byte.
PEM encoded trusted root certificate data.	+USECMNG: 1,0,"ThawteCA","8ccadc0b22cef5be72ac411a11a8d812" OK	Input PEM formatted trusted root certificate data bytes. Output MD5 hash string of the stored trusted root certificate DER.
Step 2: List all available certificates and private keys		
AT+USECMNG=3	CA, "ThawteCA","thawte Primary Root CA", "2036/07/17" OK	List all available certificates and private keys.
Step 3: Set the security profile 2 validation level to trusted root		
AT+USECPRF=2,0,1	OK	Security profile 2 has the validation level set to trusted root.
Step 4: Set the security profile 2 trusted root certificate to the CA certificate imported as "ThawteCA"		
AT+USECPRF=2,3,"ThawteCA"	OK	Security profile 2 will use the CA certificate imported as "ThawteCA" for server certificate validation.
Step 5: Use the configured USECMNG profile 2 with the UHTTP application		
AT+UHTTP=0,1,"www.ssl_tls_test_server.com"	OK	Configure the UHTTP server name.
AT+UHTTP=0,6,1,2	OK	Enable the SSL/TLS for the UHTTP profile #0 and specify the SSL/TLS security profile 2.
AT+UHTTPC=0,1,"/","https.resp"	OK	Execute the HTTP GET command.
	+UUHTTPCR: 0,1,1	HTTP GET URC response.

In the above example the following PEM encoded trusted certificate is used:

```
-----BEGIN CERTIFICATE-----
```

```
MIIEIDCCAwigAwIBAgIQNE7VVyDV7exJ9C/ON9srbTANBgkqhkiG9w0BAQUFADCB
qTELMAkGA1UEBhMCVVMxFTATBgNVBAoTDHRoYXd0ZSwgSW5jLjEoMCYGA1UECxMf
Q2VydGlmaWNhdGlvbiBTZXJ2aWNlcyBEaXZpc2lvbjE4MDYGA1UECxMvKGMpIDIw
MDYgdGhhd3RlLCBJbmMuIC0gRm9yIGF1dGhvcml6ZWQgdXNlIG9ubHkxHzAdBgNV
BAMTFnRoYXd0ZSBQcmltYXJ5IFJvb3QgQ0EwHhcNMDYxMTE3MDAwMDAwWhcNMzYw
NzE2MjM1OTU5WjCBqTELMAkGA1UEBhMCVVMxFTATBgNVBAoTDHRoYXd0ZSwgSW5j
LjEoMCYGA1UECxMfQ2VydGlmaWNhdGlvbiBTZXJ2aWNlcyBEaXZpc2lvbjE4MDYG
A1UECxMvKGMpIDIwMDYgdGhhd3RlLCBJbmMuIC0gRm9yIGF1dGhvcml6ZWQgdXNl
IG9ubHkxHzAdBgNVBAMTFnRoYXd0ZSBQcmltYXJ5IFJvb3QgQ0EwggEiMA0GCSqG
SIb3DQEBAQUAA4IBDwAwggEKAoIBAQCsoPD7gFnUnMekz52hWXMJEEUMDSxuaPFs
W0hoSVk3/AszGcJ3f8wQLZU0HObrTQmnHNK4yZc2AreJ1CRfBsDMRJSUjQJib+ta
3RGNKJpchJAQeg29dGYvajig4tVUROsdB58Hum/u6f1OCyn1PoSgAfGcq/gcfomk
6KHYcWUNo1F77rzSImANuVud37r8UVsLr5iy6S7pBOhih94ryNdOwUxkHt3Ph1i6
Sk/KaAcdHJ1KxtUvkcx8cXIcxcBn6zL9yZJclNqFwJu/U30rCfSMnZEfl2pSy94J
NqR32HuHUETVPm4pafs5SSYeCaWAe0At6+gnhcn+Yf1+5nyXHdWdAgMBAAGjQjBA
MA8GA1UdEwEB/wQFMAMBAf8wDgYDVR0PAQH/BAQDAgEGMB0GA1UdDgQWBBR7W0XP
r87Lev0xkhpqtvNG61dIUDANBgkqhkiG9w0BAQUFAAOCAQEAeRHAS7ORtvzw6WfU
DW5FvlXok9LOAz/t2iWwHVfLHjp2oEzsUHboZHIMpKnxuIvW1oeEuzLlQRHAd9mz
YJ3rG9XRbkREqaYB7FViHXe4XI5ISXycO1cRrK1zN44veFyQaEfZYGDm/Ac9IiAX
xPcW6cTYcvnIc3zfFi8VqT79aie2oetaupgf1eNNZAqdE8hhuvU5HIe6uL17In/2
/qxAeeWsEG89jxt5dovEN7MhGITlNgDrYyCZuen+MwS7QcjBAvlEYyCegc5C09Y/
LHbTY5xZ3Y+m4Q6gLkH3LpVHz7z9M/P2C2F+fpErgUfCJzDupxBdN49cOSvkBPB7
jVaMaA==
-----END CERTIFICATE-----
```


26.6 Notes

Due to significant memory fingerprint of an SSL/TLS connection, the number of concurrent SSL/TLS connections is limited. The USECMNG and the underlying SSL/TLS infrastructure allows 4 concurrent SSL/TLS connections (i.e. 4 HTTPS requests or 2 HTTPS and 2 FTPS request).

☞ SARA-G4 / SARA-G3
The USECMNG and the underlying SSL/TLS infrastructure allows 2 concurrent SSL/TLS connections (i.e. 2 HTTPS requests or 1 HTTPS and 1 FTPS request).

27 FTP

Proprietary u-blox AT commands. FTP AT commands set can be used for sending and receiving files over the available bearer, transparently retrieving and storing them in the file system. Standard file and directory management operations on the remote FTP server are as well possible. PSD or CSD connection must be activated before using FTP client services.

☞ TOBY-L2 / MPCI-L2 / LARA-R2 / TOBY-R2 / SARA-U2 / LISA-U2 / LISA-U1 / SARA-G4 / SARA-G3 / LEON-G1
See +UPSD, +UPSDA and +UPSND AT commands for establishing a PSD connection.

☞ SARA-G3 / LEON-G1
See +UCSD, +UCSDA and +UCSND AT commands for establishing a CSD connection.

Basically, two AT commands are necessary for an FTP client service: one AT command (+UFTP) to configure the FTP profile, a second AT command to execute a specific FTP command (+UFTPC). The final result of an FTP command will be notified through the +UUFTPCR URC whereas data will be provided through +UUFTPCD URC.

When these commands report an error which is not a +CME ERROR, the error code can be queried using the +UFTPER AT command.

27.1 FTP service configuration +UFTP

+UFTP						
Modules	TOBY-L200-02S TOBY-L200-03A TOBY-L200-03S TOBY-L201 TOBY-L210-02S TOBY-L210-03A TOBY-L210-03S TOBY-L210-62S TOBY-L220 TOBY-L280 MPCI-L200-02S MPCI-L200-03S MPCI-L201 MPCI-L210-02S MPCI-L210-03S MPCI-L220 MPCI-L280					
	LARA-R2 TOBY-R2					
	SARA-U2 LISA-U2 LISA-U1					
	SARA-G4 SARA-G340 SARA-G350 SARA-G350-53S LEON-G1					
Attributes	**Syntax**	**PIN required**	**Settings saved**	**Can be aborted**	**Response time**	**Error reference**
	partial	No	No	No	-	Appendix A.9.1

27.1.1 Description

Sets up a parameter for FTP service, or resets a parameter to its factory-programmed value. The set/reset command needs to be executed for each single <op_code>. The read command returns the current setting of all the FTP parameters, one per line (i.e. the FTP profile). The FTP parameter values set with this command are all volatile (not stored in non-volatile memory).

☞ If the set command is issued without <param1> parameter, the corresponding <op_code> parameter is reset to the default value.

27.1.2 Syntax

Type	Syntax	Response	Example
Generic syntax			
Set	AT+UFTP=<op_code>[,<param1>[,<param2>]]	OK	AT+UFTP=7,21 OK
FTP server IP address			
Set	AT+UFTP=0[,<IP_address>]	OK	AT+UFTP=0,"192.168.1.0" OK
FTP server name			
Set	AT+UFTP=1[,<server_name>]	OK	AT+UFTP=1,"ftp.server.com" OK
Username			
Set	AT+UFTP=2[,<username>]	OK	AT+UFTP=2,"user_test" OK
Password			
Set	AT+UFTP=3[,<password>]	OK	AT+UFTP=3,"PWD" OK

Type	Syntax	Response	Example
Account			
Set	AT+UFTP=4[,<account>]	OK	AT+UFTP=4,"test" OK
Inactivity timeout			
Set	AT+UFTP=5[,<timeout>]	OK	AT+UFTP=5,21 OK
FTP mode			
Set	AT+UFTP=6[,<FTP_mode>]	OK	AT+UFTP=6,1 OK
FTP server port			
Set	AT+UFTP=7[,<FTP_server_port>]	OK	AT+UFTP=7,30 OK
FTP Secure option in explicit mode			
Set	AT+UFTP=8[,<FTP_secure>[,<USECMNG_profile>]]	OK	AT+UFTP=8,1,2 OK
Timer Trigger configuration for Direct Link			
Set	AT+UFTP=9,<timer_trigger>	OK	AT+UFTP=9,500 OK
Data Length Trigger configuration for Direct Link			
Set	AT+UFTP=10,<data_length_trigger>	OK	AT+UFTP=10,1024 OK
Character trigger configuration for Direct Link			
Set	AT+UFTP=11,<character_trigger>	OK	AT+UFTP=11,13 OK
Read	AT+UFTP?	+UFTP: 0,<IP_address> +UFTP: 1,<server_name> +UFTP: 2,<username> +UFTP: 4,<account> +UFTP: 5,<timeout> +UFTP: 6,<FTP_mode> +UFTP: 7,<FTP_server_port> [+UFTP: 8,<FTP_secure>[,<USECMNG_profile>]] +UFTP: 9,<timer_trigger> +UFTP: 10,<data_length_trigger> +UFTP: 11,<character_trigger> OK	+UFTP: 0,"216.239.59.147" +UFTP: 1,"" +UFTP: 2,"username" +UFTP: 4,"account" +UFTP: 5,0 +UFTP: 6,0 +UFTP: 7,21 +UFTP: 8,0 +UFTP: 9,500 +UFTP: 10,1024 +UFTP: 11,13 OK
Test	AT+UFTP=?	+UFTP: (list of supported <param_tag>s) OK	+UFTP: (0-11) OK

27.1.3 Defined values

Parameter	Type	Description
<op_code>	String	FTP parameter: • 0: FTP server IP address • 1: FTP server name • 2: FTP username • 3: FTP password • 4: FTP additional user account • 5: FTP inactivity timeout period

Parameter	Type	Description
		• 6: FTP mode • 7: remote FTP server listening port • 8: FTP secure • 9: timer trigger • 10: data length trigger • 11: character trigger
<IP_address>	String	FTP server IP address. The default value is an empty string. For IP address format reference see the IP addressing.
<server_name>	String	FTP server name (e.g. "ftp.server.com"). The maximum length is 128 characters. The default value is an empty string.
<username>	String	User name (the maximum length is 30 characters) for the FTP login procedure. The default value is an empty string.
<password>	String	Password (the maximum length is 30 characters) for the FTP login procedure. The default value is an empty string.
<account>	String	Additional user account (if required) for the FTP login procedure. The maximum length is 30 characters. The default value is an empty string.
<timeout>	Number	Inactivity timeout period in seconds. The range goes from 0 to 86400 s; 0 means no timeout (the FTP session will not be terminated in the absence of incoming traffic). The default value is 30 s.
<FTP_mode>	Number	FTP mode: • 0 (default value): active • 1: passive
<FTP_server_port>	Number	Remote FTP server listening port; it must be a valid TCP port value. The range goes from 1 to 65535; the default value is 21.
<FTP_secure>	Number	Enables / disables the Secure option (explicit mode) of FTP client service. FTP Secure option in explicit mode (SSL encryption of FTP control channel; FTP data channel is not encrypted): • 0 (default value): no SSL encryption • 1: enable SSL encryption of FTP control connection
<USECMNG_profile>	Number	USECMNG profile (number). Defines the USECMNG profile which specifies the SSL/TLS properties to be used for the SSL/TLS connection. The range goes from 0 to 4. If no profile is set a default USECMNG profile is used (see USECMNG section).
<timer_trigger>	Number	Enhanced Direct Link sending timer trigger (in milliseconds); valid range is 0(factory-programmed value), 100-120000; 0 means trigger disabled.
<data_length_trigger>	Number	Enhanced Direct Link data length trigger in bytes, valid range is 0 (factory-programmed value), 3-2048; 0 means trigger disabled.
<character_trigger>	Number	Enhanced Direct Link character trigger, the value represents the ASCII code (in base 10) of the character to be used as character trigger. The allowed range is -1, 0-255, the factory-programmed value is -1; -1 means trigger disabled.
<param1>	Number / String	Type and supported content depend on related <op_code> (details are given above). If <param1> is not specified the value of the corresponding parameter <op_code> is reset to default value.
<param2>	Number / String	Type and supported content depend on related <op_code> (details are given above). If <param2> is not specified the value of the corresponding parameter <op_code> is reset to default value.

27.1.4 Notes

- The information text response to the read command does not display the password.
- The FTP server IP address and the FTP server name are mutually exclusive. If value for <op_code>=0 is specified by user, then value for <op_code>=1 is reset or vice versa.
- Some network operators do not allow incoming connections. Due to these limitations introduced by network operators it is possible to encounter problems using FTP active mode. If the FTP active mode fails to exchange files, try the passive mode to solve the problem.
- Some network operators do not allow FTPS. In this case the +UFTPC=1 command (FTP login) will return a failure response via +UUFTPCR URC after an SSL timeout of 30 s.

TOBY-L2 / MPCI-L2 / LARA-R2 / TOBY-R2 / SARA-U2 / LISA-U2 / LISA-U1 / SARA-G4 / SARA-G3 / LEON-G1

- <op_code>=9, 10 and 11 are not supported.
- <timer_trigger>, <data_length_trigger> and <character_trigger> parameters are not supported.

TOBY-L2 / MPCI-L2 / LARA-R2 / TOBY-R2

- If the PSD profile protocol type is set to IPv6 (see the +UPSD AT command description), the IP address of the FTP server must be in IPv6 format.

TOBY-L201-01S / MPCI-L201-01S

- <op_code>=8 is not supported.

TOBY-L201-02S / MPCI-L201-02S

- <op_code>=8 is not supported by TOBY-L201-02S-00, MPCI-L201-02S-00.

LARA-R2 / TOBY-R2 / SARA-U2 / LISA-U2 / LISA-U1

- During connection to FTP remote server (via FTP login command) the FTP profile parameters cannot be changed or reset to factory-programmed values until disconnection takes place (FTP logout). Only <op_code>=5 (inactivity timeout), and <op_code>=6 (FTP mode), can be updated while the FTP connection is on the go.

SARA-U260 / SARA-U270 / SARA-U280 / LISA-U2 / LISA-U1

- The <USECMNG_profile> parameter is not supported.

SARA-G340-00S / SARA-G350-00S / SARA-G350-00X / LEON-G1

- <op_code>=8 is not supported.

SARA-G340-01S / SARA-G350-01B / SARA-G350-01S

- The server IP or name shall be inserted prior to the SSL encryption option (<op_code>=8).
- The <USECMNG_profile> parameter is not supported.

27.2 FTP command +UFTPC

+UFTPC						
Modules	TOBY-L200-02S TOBY-L200-03A TOBY-L200-03S TOBY-L201 TOBY-L210-02S TOBY-L210-03A TOBY-L210-03S TOBY-L210-62S TOBY-L220 TOBY-L280 MPCI-L200-02S MPCI-L200-03S MPCI-L201 MPCI-L210-02S MPCI-L210-03S MPCI-L220 MPCI-L280					
	LARA-R2 TOBY-R2					
	SARA-U2 LISA-U2 LISA-U1					
	SARA-G4 SARA-G340 SARA-G350 SARA-G350-53S LEON-G1					
Attributes	**Syntax**	**PIN required**	**Settings saved**	**Can be aborted**	**Response time**	**Error reference**
	partial	No	No	No	-	Appendix A.9.1

27.2.1 Description

Triggers the FTP actions corresponding to the <op_code> parameter. The final result code indicates if sending the command request to the FTP process was successful or not. The +UUFTPCR (FTP command result) URC returns to the user the final result of the FTP command previously sent with +UFTPC. As well, the +UUFTPCD FTP unsolicited data URC provides the data requested by the user (e.g. file or directory lists) and received from the FTP server.

☞ LARA-R2 / TOBY-R2 / SARA-U2 / LISA-U2 / LISA-U1
If the SSL option is enabled and the network operator does not allow FTPS, the +UUFTPCR URC notifies the command failure after an SSL timeout of 30 s.

☞ TOBY-L2 / MPCI-L2 / LARA-R2 / TOBY-R2 / SARA-U2 / LISA-U2 / LISA-U1
The +UUFTPCD URC is displayed only on the AT terminal that issued the +UFTPC related command.

☞ TOBY-L200-02S / TOBY-L200-03A / TOBY-L200-03S / TOBY-L201 / TOBY-L210-02S / TOBY-L210-03A / TOBY-L210-03S / TOBY-L210-62S / TOBY-L220 / TOBY-L280 / MPCI-L200-02S / MPCI-L200-03S / MPCI-L201 / MPCI-L210-02S / MPCI-L210-03S / MPCI-L220 / MPCI-L280 / SARA-U260 / SARA-U270-00S / SARA-U270-00X / SARA-U270-03A / SARA-U270-03S / SARA-U270-53S / SARA-U270-73S / SARA-U280 / LISA-U2 / LISA-U1 / SARA-G4 / SARA-G340 / SARA-G350 / LEON-G1
FTPC data commands use the extended EPSV/EPRT which supports IPv6 adressing. If the FTP server implementation of the EPSV/EPRT commands response is non-standard the FTPC data commands fail.

☞ The timing before the +UUFTPCR URC is issued on the AT terminal also depends by the DNS resolution. For further details about the estimated response time related to the DNS resolution, see the +UDNSRN AT command.

27.2.2 Syntax

Type	Syntax	Response	Example
General syntax			
Set	AT+UFTPC=<op_code>[,<param1>[,<param2>[,<param3>]]]	OK	AT+UFTPC=4,"data.zip","data.zip" OK
FTP logout			
Set	AT+UFTPC=0	OK	AT+UFTPC=0 OK
FTP login			
Set	AT+UFTPC=1	OK	AT+UFTPC=1 OK
Delete the file from the FTP server			
Set	AT+UFTPC=2,<file_name>	OK	AT+UFTPC=2,"mytest" OK
Rename a file of FTP server			
Set	AT+UFTPC=3,<file_name>,<new_file_name>	OK	AT+UFTPC=3,"old_name","final_name" OK
Retrieve the file from the FTP server			
Set	AT+UFTPC=4,<remote_file_name>,<local_file_name>[,<retrieving_mode>]	OK	AT+UFTPC=4,"data.zip","data.zip" OK
Store the file on the FTP server			
Set	AT+UFTPC=5,<local_file_name>,<remote_file_name>[,<number_of_byte>]	OK	AT+UFTPC=5,"data.zip","data.zip",30 OK
Retrieve a file from the FTP server using direct link mode			
Set	AT+UFTPC=6,<remote_file_name>[,<number_of_byte>]	OK	AT+UFTPC=6,"data.zip",30 OK
Send a file to the FTP server using the direct link mode			
Set	AT+UFTPC=7,<remote_file_name>[,<number_of_byte>]	OK	AT+UFTPC=7,"data.zip",30 OK
Change the working directory to the specified one			
Set	AT+UFTPC=8,<directory_name>	OK	AT+UFTPC=8,"data_folder" OK
Create a directory on the FTP host			
Set	AT+UFTPC=10,<directory_name>	OK	AT+UFTPC=10,"new_data_folder" OK
Remove the directory from the remote FTP server			
Set	AT+UFTPC=11,<directory_name>	OK	AT+UFTPC=11,"data_folder" OK
Information of a file or a directory			
Set	AT+UFTPC=13[,<file_directory_name>]	OK	AT+UFTPC=13,"data_folder" OK
List the file names in a specified directory			
Set	AT+UFTPC=14[,<file_directory_name>]	OK	AT+UFTPC=14,"data.zip" OK
Retrieve the FOTA update file			
Set	AT+UFTPC=100,<remote_file_name>	OK	AT+UFTPC=100,"data.zip" OK
Test	AT+UFTPC=?	+UFTPC: (list of supported <op_code>s) OK	+UFTPC: (0-5,8,10,11,13,14,100) OK

Type	Syntax	Response	Example
URC		+UUFTPCD: <op_code>,<ftp_data_len>,<ftp_data>	+UUFTPCD: 13,16,"16 bytes of data"
URC		+UUFTPCR: <op_code>,<ftp_result>[,<md5_sum>]	+UUFTPCR: 1,1

27.2.3 Defined values

Parameter	Type	Description
<op_code>	Number	FTP command request. Allowed values: • 0: FTP logout; terminates the FTP session by performing a logout. • 1: FTP login; connects to the FTP server using the parameters of the current FTP profile (set via AT+UFTP command). • 2: deletes the file from the FTP server. • 3: renames the file. This AT command just sends requests to the FTP process. • 4: retrieves the file from the FTP server. • 5: stores the file on the FTP server. • 6: retrieves a file from the FTP server using direct link mode. This command handles the initial steps of the FTP protocol for retrieving a file; after that it will establish a transparent end to end communication with the data connection TCP socket via the serial interface. After the CONNECT result code, the file content will be directly sent to the serial interface. When the data transfer is completed, the module will automatically exit from direct link mode (no need to send +++ sequence). • 7: sends a file to the FTP server using the direct link mode. This command handles the initial steps of the FTP protocol for sending a file; after that it will establish a transparent end to end communication with the data connection TCP socket via the serial interface. After the CONNECT result code, the user can send the file content via the serial interface. Once finished, the user must wait at least 2 s before sending the +++ sequence to switch off the direct link mode. This operation may take a few seconds because the command also handles the final steps of the FTP protocol • 8: changes the working directory to the specified one. • 9: RFU. • 10: creates a directory on the FTP host. • 11: removes the directory from the remote FTP server. • 12: RFU. • 13: information of a file or a directory. The URC +UUFTPCD returns the information of the specified file or directory from the FTP server. • 14: lists the file names in a specified directory. The URC +UUFTPCD returns the list of the file names received from FTP server. If the directory name is omitted, the list of the files names of current working directory is requested. • 100: retrieves the FOTA update file. The downloaded file will not be accessible to the user. The +UUFTPCR URC will display the MD5 checksum of the downloaded file.
<file_name>	String	File name to be deleted/renamed from the FTP host. For the limit of the length of the string, see Command line.
<new_file_name>	String	New file name. For the limit of the length of the string, see Command line.
<remote_file_name>	String	Remote file name to be retrieved from the FTP host or stored in it. The maximum parameter length is 256 characters.
<local_file_name>	String	Local file name (module file system) text string to be stored/sent on the file system. For the limit of the length of the string, see the File system limits.
<retrieving_mode>	Number	Allowed values: • 0 (default value): the file is retrieved from beginning. • 1: restart the data retrieving from the last data received during the previous download interrupted due to error.
<number_of_byte>	Number	Represents the number of bytes already sent to the FTP server or received from it. • During a file retrieval the server writes the file from the offset indicated with this parameter. • During a file storing the server sends the data from the value indicated with this parameter.
<directory_name>	String	Directory name on the FTP server. For the limit of the length of the string, see Command line.

Parameter	Type	Description
<file_directory_name>	String	Path file/directory name to be listed. If not specified, the current directory list is requested. For the limit of the length of the string, see Command line. • <param1> optional parameter; the text string of the path (file or directory) to be name listed. If not specified, the list of the files names of current working directory is requested.
<ftp_data_len>	Number	Amount of data in bytes
<ftp_data>	String	Data available from the FTP server in the ASCII [0x00,0xFF] range. The starting quotation mark shall not be taken into account like data, the first byte of data starts after the first quotation mark. The total number of bytes is <ftp_data_len>. At the end of the byte stream, another quotation mark is provided for user convenience and visualization purposes.
<ftp_result>	Number	• 0: fail • 1: success
<md5_sum>	String	MD5 checksum of the FOTA update file downloaded via +UFTPC=100 AT command. This parameter is issued only for +UFTPC=100 AT command.
<param1>	String	Content depend on related <op_code> (details are given above)
<param2>	String	Content depend on related <op_code> (details are given above)
<param3>	String	Content depend on related <op_code> (details are given above)

27.2.4 Notes

- If <op_code>=6 the user must switch off the direct link mode (sending +++ to the serial interface) when the data stream is finished. This operation may take up to 10 s because the command also handles the final steps of the FTP protocol.

LARA-R2 / TOBY-R2 / SARA-U2 / LISA-U2 / LISA-U1 / SARA-G4 / SARA-G3 / LEON-G1

- <op_code> = 100 is not supported.
- <md5_sum> is not supported.

LISA-U200-00S / LISA-U200-01S / LISA-U230 / LISA-U260-01S / LISA-U270-01S / LISA-U1 / SARA-G340-00S / SARA-G340-01S / SARA-G350-00S / SARA-G350-00X / SARA-G350-01B / SARA-G350-01S / LEON-G1

- <number_of_byte> is not supported if <op_code>=6 or <op_code>=7.

27.3 FTP error +UFTPER

+UFTPER						
Modules	TOBY-L200-02S TOBY-L200-03A TOBY-L200-03S TOBY-L201 TOBY-L210-02S TOBY-L210-03A TOBY-L210-03S TOBY-L210-62S TOBY-L220 TOBY-L280 MPCI-L200-02S MPCI-L200-03S MPCI-L201 MPCI-L210-02S MPCI-L210-03S MPCI-L220 MPCI-L280					
	LARA-R2 TOBY-R2					
	SARA-U2 LISA-U2 LISA-U1					
	SARA-G4 SARA-G340 SARA-G350 SARA-G350-53S LEON-G1					
Attributes	**Syntax**	**PIN required**	**Settings saved**	**Can be aborted**	**Response time**	**Error reference**
	full	No	No	No	-	Appendix A.9.1

27.3.1 Description

This command retrieves the error class and code of the last FTP operation.

27.3.2 Syntax

Type	Syntax	Response	Example
Action	AT+UFTPER	+UFTPER: <error_class>,<error_code> OK	+UFTPER: 1,1 OK

27.3.3 Defined values

Parameter	Type	Description
<error_class>	Number	Value of error class. Values are listed in Appendix A.9
<error_code>	Number	Value of class-specific error code (reply code if <error_class> is 0). The values are listed in Appendix A.9.1

28 HTTP

The section describes the u-blox proprietary AT commands that can be used for sending requests to a remote HTTP server, receiving the server response and transparently storing it in the file system. The supported methods are: HEAD, GET, DELETE, PUT, POST file and POST data. A PSD or CSD connection must be activated before using HTTP AT commands.

☞ TOBY-L2 / MPCI-L2 / LARA-R2 / TOBY-R2 / SARA-U2 / LISA-U2 / LISA-U1 / SARA-G4 / SARA-G3 / LEON-G1
See +UPSD, +UPSDA and +UPSND AT commands for establishing a PSD connection.

☞ SARA-G3 / LEON-G1
See +UCSD, +UCSDA and +UCSND AT commands for establishing a CSD connection.

When these commands report an HTTP error, the error code can be queried using the +UHTTPER AT command.

☞ LISA-U200-00S / LISA-U200-01S / LISA-U200-02S / LISA-U200-52S / LISA-U200-62S / LISA-U230 / LISA-U260 / LISA-U270 / LISA-U1 / LEON-G1
If using CellLocate® and HTTP commands HTTP profiles in the range 1-3 must be used.

28.1 HTTP control +UHTTP

+UHTTP						
Modules	TOBY-L200-02S TOBY-L200-03A TOBY-L200-03S TOBY-L201 TOBY-L210-02S TOBY-L210-03A TOBY-L210-03S TOBY-L210-62S TOBY-L220 TOBY-L280 MPCI-L200-02S MPCI-L200-03S MPCI-L201 MPCI-L210-02S MPCI-L210-03S MPCI-L220 MPCI-L280					
	LARA-R2 TOBY-R2					
	SARA-U2 LISA-U2 LISA-U1					
	SARA-G4 SARA-G340 SARA-G350 SARA-G350-53S LEON-G1					
Attributes	**Syntax**	**PIN required**	**Settings saved**	**Can be aborted**	**Response time**	**Error reference**
	partial	No	No	No	-	Appendix A.9

28.1.1 Description

Configures, reads or resets (to the factory-programmed values) the HTTP application profile parameters. Up to 4 different HTTP profiles can be defined. To set all the parameters in an HTTP profile a set command for each <op_code> needs to be issued.

☞ The configured HTTP profile parameters are not saved in the non volatile memory.

☞ The read command has two possible usages. The functionality of the command differs with the number of command parameters issued:
- Only the first command parameter (<profile_id>) issued: the module resets all the profile parameters (to the factory-programmed values) for the profile specified with <profile_id>
- Only the first and second command parameters used (<profile_id>, <op_code>): the module returns the current value of the profile parameter specified with <op_code> and related to the profile specified with <profile_id>

28.1.2 Syntax

Type	Syntax	Response	Example
Generic syntax			
Set	AT+UHTTP=<profile_id>,<op_code>,<param_val>[,<param_val1>]	OK	AT+UHTTP=2,0,"125.24.51.133" OK
Read	AT+UHTTP=<profile_id>,<op_code>	+UHTTP: <profile_id>,<op_code>,<param_val>[,<param_val1>] OK	AT+UHTTP=2,0 +UHTTP: 2,0,"125.24.51.133" OK
HTTP server IP address			
Set	AT+UHTTP=<profile_id>,0,<HTTP_server_IP_address>	OK	AT+UHTTP=2,0,"125.24.51.133" OK

Type	Syntax	Response	Example
Read	AT+UHTTP=<profile_id>,0	+UHTTP: <profile_id>,0,<HTTP_server_IP_address> OK	AT+UHTTP=2,0 +UHTTP: 2,0,"125.24.51.133" OK
HTTP server name			
Set	AT+UHTTP=<profile_id>,1,<HTTP_server_name>	OK	AT+UHTTP=2,1,"www.u-blox.com" OK
Read	AT+UHTTP=<profile_id>,1	+UHTTP: <profile_id>,1,<HTTP_server_name> OK	AT+UHTTP=2,1 +UHTTP: 2,1,"www.u-blox.com" OK
Username			
Set	AT+UHTTP=<profile_id>,2,<username>	OK	AT+UHTTP=2,2,"my_user" OK
Read	AT+UHTTP=<profile_id>,2	+UHTTP: <profile_id>,2,<username> OK	AT+UHTTP=2,2 +UHTTP: 2,2,"my_user" OK
Password			
Set	AT+UHTTP=<profile_id>,3,<password>	OK	AT+UHTTP=2,3,"pwd" OK
Read	AT+UHTTP=<profile_id>,3	+UHTTP: <profile_id>,3,<password> OK	AT+UHTTP=2,3 +UHTTP: 2,3,"pwd" OK
Authentication type			
Set	AT+UHTTP=<profile_id>,4,<HTTP_authentication>	OK	AT+UHTTP=2,4,1 OK
Read	AT+UHTTP=<profile_id>,4	+UHTTP: <profile_id>,4,<HTTP_authentication> OK	AT+UHTTP=2,4 +UHTTP: 2,4,1 OK
HTTP server port			
Set	AT+UHTTP=<profile_id>,5,<HTTP_port>	OK	AT+UHTTP=2,5,30 OK
Read	AT+UHTTP=<profile_id>,5	+UHTTP: <profile_id>,5,<HTTP_port> OK	AT+UHTTP=2,5 +UHTTP: 2,5,30 OK
HTTP secure option			
Set	AT+UHTTP=<profile_id>,6,<HTTP_secure>[,<USECMNG_profile>]	OK	AT+UHTTP=2,6,1 OK
Read	AT+UHTTP=<profile_id>,6	+UHTTP: <profile_id>,6,<HTTP_secure>[,<USECMNG_profile>] OK	AT+UHTTP=2,6 +UHTTP: 2,6,1 OK
HTTP add custom request headers			
Set	AT+UHTTP=<profile_id>,9,<custom_request_header>	OK	AT+UHTTP=2,9,"0:hdr0:val0" OK
Read	AT+UHTTP=<profile_id>,9	+UHTTP: <profile_id>,9,<custom_request_header> OK	AT+UHTTP=2,9 +UHTTP: 2,9,"0:hdr0:val0" OK
Read	AT+UHTTP=<profile_id>	OK	AT+UHTTP=2 OK
Test	AT+UHTTP=?	+UHTTP: (list of supported <profile_id>s),(list of supported <op_code>s)	+UHTTP: (0-3),(0-9) OK

Type	Syntax	Response	Example
		OK	

28.1.3 Defined values

Parameter	Type	Description
<profile_id>	Number	HTTP profile identifier, in range 0-3
<op_code>	Number	• 0: HTTP server IP address; • 1: HTTP server name; • 2: username • 3: password • 4: authentication type • 5: HTTP server port • 6: HTTP Secure option (SSL encryption) • 7: reserved for internal use only • 8: reserved for internal use only • 9: HTTP add custom request headers
<HTTP_server_IP_address>	String	HTTP server IP address; The factory-programmed value is an empty text string. For IP address format reference see the IP addressing.
<HTTP_server_name>	String	HTTP server name; the maximum length is 128 characters (e.g. "http.server.com"). The factory-programmed value is an empty text string.
<username>	String	User name; the maximum length is 30 characters; it is used for the HTTP login procedure if the authentication is used. The factory-programmed value is an empty text string.
<password>	String	Password; the maximum length is 30 characters; it is used for the HTTP login procedure if the authentication is used. The factory-programmed value is an empty text string.
<HTTP_authentication>	Number	HTTP authentication method; the allowed values are: • 0 (factory-programmed value): no authentication • 1: basic authentication (the password and username must be set)
<HTTP_port>	Number	HTTP server port; range 1-65535. It means the HTTP server port to be used in a HTTP request; the factory-programmed value is 80.
<HTTP_secure>	Number	HTTP Secure option (SSL encryption). It enables or disables the HTTPS (SSL secured connection for HTTP application) usage: • 0 (factory-programmed value): HTTPS (SSL encryption) disabled and the HTTP server port set to 80 • 1: HTTPS (SSL encryption) enabled and the HTTP server port set to 443; an USECMNG profile can be specified with an additional parameter.
<USECMNG_profile>	Number	Defines the USECMNG profile which specifies the SSL/TLS properties to be used for the SSL/TLS connection. The range goes from 0 to 4. If no profile is set a default USECMNG profile is used
<custom_request_header>	String	Sets/clears the custom request header (string); the custom header option follows a defined format "hdr_id:hdr_name:hdr_value"; the hdr_id is a number in the range [0-4]; the hdr_name and hdr_value are strings having a maximum length of 64 characters (see examples below). • "0:hdr0:val0": set header 0 with name hdr0 and value val0 • "0:": clear header 0 • "1:hdr1:val1": set header 1 with name hdr1 and value val1 • "1:": clear header 1 • "2:hdr2:val2": set header 2 with name hdr2 and value val2 • "2:": clear header 2 • "3:hdr3:val3": set header 3 with name hdr3 and value val3 • "3:": clear header 3 • "4:hdr4:val4": set header 4 with name hdr4 and value val4 • "4:": clear header 4 The following character is not allowed in the <custom_request_header> parameter: • 0x3A (:)
<param_val>	Number / String	Type and supported content depend on the related <op_code> parameter; details are given above

Parameter	Type	Description
<param_val1>	Number / String	Type and supported content depend on the related <op_code> parameter; details are given above.

28.1.4 Notes

- HTTP server IP address and HTTP server name are mutually exclusive. If the HTTP server IP address is specified by the user, then the value for the HTTP server name is reset, or vice versa.

TOBY-L2 / MPCI-L2 / SARA-U201-03A / SARA-U201-03B / SARA-U201-03X / SARA-U201-63B / SARA-U260 / SARA-U270 / SARA-U280 / LISA-U2 / LISA-U1 / SARA-G340-00S / SARA-G340-01S / SARA-G350-00S / SARA-G350-00X / SARA-G350-01B / SARA-G350-01S / LEON-G1

- <op_code>=9 (HTTP add custom request headers) is not supported.

TOBY-L2 / MPCI-L2 / LARA-R2 / TOBY-R2

- If the +UPSD command sets the PSD profile protocol type to IPv6, an IPv6 address shall be used for parameter HTTP server IP address.

TOBY-L201-01S / MPCI-L201-01S

- <op_code>=6 (HTTP Secure option) is not supported.

TOBY-L201-02S / MPCI-L201-02S

- <op_code>=6 (HTTP Secure option) is not supported by TOBY-L201-02S-00, MPCI-L201-02S-00.

SARA-U260-00S / SARA-U270-00S / SARA-U270-00X / SARA-U280-00S / LISA-U200-00S / LISA-U200-01S / LISA-U200-02S / LISA-U200-52S / LISA-U200-62S / LISA-U230 / LISA-U260 / LISA-U270 / LISA-U1 / SARA-G340-01S / SARA-G350-01B / SARA-G350-01S

- <USECMNG_profile> parameter is not supported.

SARA-U260-00S / SARA-U270-00S / SARA-U270-00X / SARA-U280-00S / SARA-G340-01S / SARA-G350-01B / SARA-G350-01S / LEON-G1

- When HTTP Secure option is enabled, the default HTTP port is automatically set to 443. If the port is manually set (with the <op_code>=5) to a custom port other than 80 prior to enabling the secure option the custom port setting will not be modified.

SARA-G340-00S / SARA-G350-00S / SARA-G350-00X / LEON-G1

- <op_code>=6 (HTTP Secure option) is not supported.

28.2 HTTP advanced control+UHTTPAC

+UHTTPAC						
Modules	TOBY-L200-02S TOBY-L200-03A TOBY-L200-03S TOBY-L201 TOBY-L210-02S TOBY-L210-03A TOBY-L210-03S TOBY-L210-62S TOBY-L220 TOBY-L280 MPCI-L200-02S MPCI-L200-03S MPCI-L201 MPCI-L210-02S MPCI-L210-03S MPCI-L220 MPCI-L280					
	LARA-R2 TOBY-R2					
	SARA-U201 SARA-U260-03S SARA-U270-03A SARA-U270-03S SARA-U270-04B SARA-U270-53S SARA-U270-73S SARA-U280-03S LISA-U200-03S LISA-U200-83S LISA-U201					
	SARA-G4 SARA-G340-02S SARA-G340-02X SARA-G350-02A SARA-G350-02S SARA-G350-02X SARA-G350-53S					
Attributes	**Syntax**	**PIN required**	**Settings saved**	**Can be aborted**	**Response time**	**Error reference**
	full	No	No	No	-	Appendix A.9

28.2.1 Description

Configures, reads or resets (to the factory-programmed values) the HTTP application profile advanced parameters.

☞ The configured HTTP profile advanced parameters are not saved in the non volatile memory.

28.2.2 Syntax

Type	Syntax	Response	Example
Set	AT+UHTTPAC=<profile_id>,<param_tag>,<key>,<value>	OK	AT+UHTTPAC=0,0,0,"UBLX_SESSION_COOKIE_0"

Type	Syntax	Response	Example
			OK
Read	AT+UHTTPAC=<profile_id>,<param_tag>,<key>	+UHTTPAC: <profile_id>,<param_tag>,<key>,<value> OK	AT+UHTTPAC=0,0,0 +UHTTP: 0,0,0,"UBLX_SESSION_COOKIE_0" OK
Test	AT+UHTTPAC=?	+UHTTPAC: (list of supported <profile_id>s),(list of supported <param_tag>s),(list of supported <key>s) OK	+UHTTPAC: (0-3),(0),(0-3) OK

28.2.3 Defined values

Parameter	Type	Description
<profile_id>	Number	HTTP profile identifier, in range 0-3
<param_tag>	Number	• 0: HTTP request COOKIES; manage request COOKIES sent to the HTTP server. o <key>: index of the cookie (number); range 0-3. Identifies the cookie to be read if <value> is omitted or configured if <value> is a valid string. o <value>: value of the cookie (string); the maximum length is 256 characters. The cookie values respect the following rules: - Empty string ("): the cookie will be cleared and will not be present in the request; - Simple one-value cookie: the cookie will be set and sent in the request; - Complex multi-value cookie: the cookies will be set and sent in the request. The multiple cookies must be separated by a left-attached semicolon(";") and a space(" ");
<key>	Number/ String	Content depends on the related <param_tag> (see above).
<value>	Number/ String	Content depends on the related <param_tag> (see above).

28.2.4 Examples and use cases

In this section some AT+UHTTPAC command examples and use cases are listed.

Command	Response	Description
Example 1		
AT+UHTTPAC=0,0,0,""	OK	Clear HTTP request cookie at index 0
Example 2		
AT+UHTTPAC=0,0,0,"SIMPLE_COOKIE"	OK	Set simple HTTP request cookie at index 0
Example 3		
AT+UHTTPAC=0,0,0,"COMPLEX_COOKIE; COMPLEX_COOKIE"	OK	Overwrite HTTP request cookie at index 0 with a complex cookie

28.3 HTTP command +UHTTPC

+UHTTPC						
Modules	TOBY-L200-02S TOBY-L200-03A TOBY-L200-03S TOBY-L201 TOBY-L210-02S TOBY-L210-03A TOBY-L210-03S TOBY-L210-62S TOBY-L220 TOBY-L280 MPCI-L200-02S MPCI-L200-03S MPCI-L201 MPCI-L210-02S MPCI-L210-03S MPCI-L220 MPCI-L280					
	LARA-R2 TOBY-R2					
	SARA-U2 LISA-U2 LISA-U1					
	SARA-G4 SARA-G340 SARA-G350 SARA-G350-53S LEON-G1					
Attributes	**Syntax**	**PIN required**	**Settings saved**	**Can be aborted**	**Response time**	**Error reference**
	partial	No	No	No	-	Appendix A.9

28.3.1 Description

Triggers the HTTP command specified with <http_command> parameter, using the HTTP application profile parameters (previously set up by +UHTTP AT command), specified with <profile_id>. The response indicates if sending the command request to HTTP process was successful or not. The final result of HTTP command will be returned to the user via the +UUHTTPCR URC.

☞ The timing before the +UUHTTPCR URC is issued on the AT terminal also depends by the DNS resolution. For further details about the estimated response time related to the DNS resolution, see the +UDNSRN AT command.

28.3.2 Syntax

Type	Syntax	Response	Example
Generic syntax			
Set	AT+UHTTPC=<profile_id>,<http_command>,<path>,<filename>[,<param1>[,<param2>[,<param3>]]]	OK	AT+UHTTPC=0,1,"/path/file.html","responseFilename" OK
HEAD command			
Set	AT+UHTTPC=<profile_id>,0,<path>,<filename>	OK	AT+UHTTPC=0,0,"/path/file.html","responseFilename" OK
GET command			
Set	AT+UHTTPC=<profile_id>,1,<path>,<filename>	OK	AT+UHTTPC=0,1,"/path/file.html","responseFilename" OK
DELETE command			
Set	AT+UHTTPC=<profile_id>,2,<path>,<filename>	OK	AT+UHTTPC=0,2,"/path/file.html","responseFilename" OK
PUT command			
Set	AT+UHTTPC=<profile_id>,3,<path>,<filename>,<filesystem_name>[,<HTTP_content_type>[,<user_defined_content_type>]]	OK	AT+UHTTPC=0,3,"/path/file.html","responseFilename","filesystemName" OK
POST file command			
Set	AT+UHTTPC=<profile_id>,4,<path>,<filename>,<filesystem_name>,<HTTP_content_type>[,<user_defined_content_type>]	OK	AT+UHTTPC=0,4,"/path/file.html","responseFilename","filesystemName",0 OK
POST data command			
Set	AT+UHTTPC=<profile_id>,5,<path>,<filename>,<data>,<HTTP_content_type>[,<user_defined_content_type>]	OK	AT+UHTTPC=0,5,"/path/file.html","responseFilename","data",0 OK
GET FOTA update file			

Type	Syntax	Response	Example
Set	AT+UHTTPC=<profile_id>,100,<path>	OK	AT+UHTTPC=0,100,"/path/file.html" OK
Test	AT+UHTTPC=?	+UHTTPC: (list of supported <profile_id>s),(list of supported <http_command>s) OK	+UHTTPC: (0-3),(0-5),100 OK
URC		+UUHTTPCR: <profile_id>,<http_command>,<http_result>[,<http_status_code>,<md5_sum>]	+UUHTTPCR: 0,1,1

28.3.3 Defined values

Parameter	Type	Description
<profile_id>	Number	HTTP profile identifier, in range 0-3
<http_command>	Number	• 0: HEAD command; issue an HEAD request to the HTTP server • 1: GET command; perform a GET request to the HTTP server • 2: DELETE command; send a DELETE request to the HTTP server • 3: PUT command; perform a PUT request to the HTTP server. • 4: POST a file command; issue a POST request for sending a file to the HTTP server • 5: POST data command; send a POST request to the HTTP server using the data specified in <data> parameter • 100: GET FOTA update file; download the FOTA update file
<path>	String	Path of HTTP server resource; the maximum length is 128 characters.
<filename>	String	Filename where the HTTP server response will be stored. If the file already exists, it will be overwritten. If the parameter is an empty string ("""), the default "http_last_response_<profile_id>" filename will be used. For file system file name and data size limits see File system limits.
<filesystem_name>	String	File system filename representing the file system filename to be sent to the HTTP server within the POST / PUT request. For file system file name and data size limits see File system limits.
<HTTP_content_type>	Number	HTTP Content-Type identifier. It represents the HTTP Content-Type identifier. Allowed values: • 0: application/x-www-form-urlencoded • 1: text/plain • 2: application/octet-stream • 3: multipart/form-data • 4: application/json (supported only for PUT and POST file command) • 5: application/xml • 6: user defined with <user_defined_content_type>
<user_defined_content_type>	Number	Used only when <HTTP_content_type>=6 (user defined Content-Type). The maximum length is 64 characters.
<data>	String	It represents the data to be sent to the HTTP server with the POST request. The maximum length is 128 bytes. The data must be formatted according to the Content-Type specified in <HTTP_content_type> parameter.
<param1>	String	Content depends on the related <http_command> (see above).
<param2>	Number	Content depends on the related <http_command> (see above).
<param3>	String	Content depends on the related <http_command> (see above).
<http_result>	Number	• 0: fail • 1: success
<http_status_code>	Number	HTTP status code reported in the server response header after a GET FOTA update file request. This parameter is issued only for AT+UHTTPC=<profile_id>,100,<path> AT command.
<md5_sum>	String	MD5 checksum of the FOTA update file. This parameter is issued only for AT +UHTTPC=<profile_id>,100,<path> AT command.

28.3.4 Notes

- The +UHTTPC command has a default timeout setting set to 180 s. The timeout is counted from the last successful network read or send operation performed by the HTTP application, so in a real timeout case the application might be executing a command more than 180 s.
- The data string must not exceed the maximum length of 128 bytes.
- If <http_command>=4 (POST a file) and the <HTTP_content_type>=3 (multipart/form-data), then the module automatically encapsulates the file content in the following multipart/form-data HTTP request:

```
--U1Blox2Http3Unique4Boundary5\r\n
```

```
Content-Disposition: form-data; name="file_post"; filename="<user_defined_content_type>"\r\n
```

```
Content-Length: <length of file specified with <user_defined_content_type>>\r\n
```

```
Content-Type: application/octet-stream\r\n
```

```
\r\n
```

```
<content of file specified with <user_defined_content_type>>\r\n
```

```
--U1Blox2Http3Unique4Boundary5--\r\n
```

```
\r\n
```

TOBY-L200-02S / TOBY-L201-01S / TOBY-L210-02S / TOBY-L210-62S / TOBY-L220 / TOBY-L280-02S / MPCI-L200 / MPCI-L201-01S / MPCI-L210 / MPCI-L220 / MPCI-L280 / LARA-R2 / TOBY-R2 / SARA-U2 / LISA-U2 / LISA-U1 / SARA-G4 / SARA-G3 / LEON-G1

- <http_command> = 100 is not supported.

TOBY-L200-03S / TOBY-L201-02S / TOBY-L210-03A / TOBY-L210-03S / TOBY-L280-03S / MPCI-L201-02S

- <http_command>=100 is not supported by TOBY-L200-03S-00, TOBY-L201-02S-00, TOBY-L210-03A-00, TOBY-L210-03S-00, TOBY-L280-03S-00 and MPCI-L201-02S-00.

LISA-U200-00S / LISA-U200-01S / LISA-U200-02S / LISA-U200-52S / LISA-U230 / LISA-U260 / LISA-U270 / LISA-U1 / SARA-G340-00S / SARA-G350-00S / SARA-G350-00X / LEON-G1

- <HTTP_content_type>= 4, 5 and 6 are not supported.

LISA-U200-62S

- <HTTP_content_type>= 6 is not supported.

SARA-G340-01S / SARA-G350-01B / SARA-G350-01S

- <HTTP_content_type>= 6 is not supported.

SARA-U260-00S / SARA-U270-00S / SARA-U270-00X / SARA-U280-00S / LISA-U200-00S / LISA-U200-01S / LISA-U200-02S / LISA-U200-52S / LISA-U200-62S / LISA-U230 / LISA-U260 / LISA-U270 / LISA-U1 / SARA-G300 / SARA-G310 / SARA-G340-00S / SARA-G350-00S / SARA-G350-00X / SARA-G350-01B / LEON-G1

- HTTP parameters <HTTP_content_type> and <user_defined_content_type> are not supported for PUT command.

28.4 HTTP protocol error +UHTTPER

+UHTTPER						
Modules	TOBY-L200-02S TOBY-L200-03A TOBY-L200-03S TOBY-L201 TOBY-L210-02S TOBY-L210-03A TOBY-L210-03S TOBY-L210-62S TOBY-L220 TOBY-L280 MPCI-L200-02S MPCI-L200-03S MPCI-L201 MPCI-L210-02S MPCI-L210-03S MPCI-L220 MPCI-L280					
	LARA-R2 TOBY-R2					
	SARA-U2 LISA-U2 LISA-U1					
	SARA-G4 SARA-G340 SARA-G350 SARA-G350-53S LEON-G1					
Attributes	**Syntax**	**PIN required**	**Settings saved**	**Can be aborted**	**Response time**	**Error reference**
	full	No	No	No	-	Appendix A.9

28.4.1 Description

Retrieves the error class and code of the latest HTTP operation on the specified HTTP profile.

28.4.2 Syntax

Type	Syntax	Response	Example
Set	AT+UHTTPER=<profile_id>	+UHTTPER: <profile_id>,<error_class>,<error_code> OK	AT+UHTTPER=1 +UHTTPER: 1,0,0 OK

28.4.3 Defined values

Parameter	Type	Description
<profile_id>	Number	HTTP profile identifier, in range 0-3
<error_class>	Number	List of the allowed values is available in Appendix A.9
<error_code>	Number	Value of class-specific error codes (reply code if class is 0). When <error_class>=10 (wrong HTTP API usage), the allowed <error_code>; values are listed in Appendix A.9.2

29 SMTP

u-blox proprietary SMTP AT commands provide the capability of sending text mails over the available data connection, with support of some header fields and attachments transparently retrieved from the file system.

A PSD or CSD connection must be activated before using SMTP AT commands: refer to +UCSD, +UCSDA and +UCSND AT commands for establishing a CSD connection and to +UPSD, +UPSDA and +UPSND AT commands for establishing a PSD connection.

When these commands report an error which is not a +CME ERROR, the error code can be queried using the +USMTPER AT command.

29.1 SMTP control +USMTP

+USMTP						
Modules	SARA-G340 SARA-G350 SARA-G350-53S LEON-G1					
Attributes	**Syntax**	**PIN required**	**Settings saved**	**Can be aborted**	**Response time**	**Error reference**
	full	No	No	No	-	+CME Error

29.1.1 Description

Sets up the necessary parameters for SMTP service, or resets parameters to the factory-programmed value. A set command for each <param_tag> needs to be issued to configure the SMTP setting. The read command returns the current setting of all the SMTP parameters except for the password, one per line (i.e. the SMTP profile).

The SMTP parameter values specified with this command are all volatile (not stored in non-volatile memory).

☞ In the set command, if only the first parameter is issued, the module resets the parameter to the factory-programmed value.

29.1.2 Syntax

Type	Syntax	Response	Example
SMTP control generic syntax			
Set	AT+USMTP=<op_code>[,<param1>[,<param2>]]	OK	AT+USMTP=0,"151.9.37.66" OK
SMTP server IP address			
Set	AT+USMTP=0[,<SMTP_server_address>]	OK	AT+USMTP=0,"151.9.37.66" OK
SMTP server name			
Set	AT+USMTP=1[,<SMTP_server_name>]	OK	AT+USMTP=1, "smtp.mail.yahoo.com" OK
SMTP username			
Set	AT+USMTP=2[,<username>]	OK	AT+USMTP=2,"myusername" OK
SMTP password			
Set	AT+USMTP=3[,<password>]	OK	AT+USMTP=3,"mypassword" OK
SMTP authentication type			
Set	AT+USMTP=4[,<authentication>]	OK	AT+USMTP=4,1 OK
SMTP inactivity timeout			
Set	AT+USMTP=5[,<inactivity_timeout>]	OK	AT+USMTP=5,50 OK
SMTP time zone			

Type	Syntax	Response	Example
Set	AT+USMTP=6[,<hour_differential>,<minute_differential>]	OK	AT+USMTP=6,3,30 OK
SMTP client port			
Set	AT+USMTP=7,<port>	OK	AT+USMTP=7,9025 OK
Read	AT+USMTP?	+USMTP: 0,<SMTP_server_address> +USMTP: 1,<SMTP_server_name> +USMTP: 2,<username> +USMTP: 4,<authentication> +USMTP: 5,<inactivity_timeout> +USMTP: 6,<hour_differential>,<minute_differential> +USMTP: 7,<port> OK	+USMTP: 0,"69.147.102.58" +USMTP: 1,"" +USMTP: 2,"username" +USMTP: 4,1 +USMTP: 5,0 +USMTP: 6,0,0 +USMTP: 7,9025 OK
Test	AT+USMTP=?	+USMTP: (list of supported <param_tag>s) OK	+USMTP: (0-7) OK

29.1.3 Defined values

Parameter	Type	Description
<op_code>	Number	Type of operation: • 0: SMTP server IP address • 1: SMTP server name • 2: username • 3: password • 4: authentication type • 5: inactivity timeout • 6: time zone, used for the date header field of mails • 7: SMTP port configuration
<SMTP_server_address>	String	Represents the SMTP server IP address expressed in dotted decimal notation form
<SMTP_server_name>	String	Represents the string of SMTP server name (e.g. "smtp.server.com"). The maximum length is 128 characters
<username>	String	Represents the user name (the maximum length is 30 characters) for the SMTP login procedure if the authentication is used
<password>	String	Represents the password (the maximum length is 30 characters) for the SMTP login procedure if the authentication is used
<authentication>	Number	SMTP authentication method (if any): • 0 (default value): no authentication • 1: plain authentication • 2: login authentication
<inactivity_timeout>	Number	Inactivity timeout period expressed in seconds, from 0 to 86400 s. 0 means no timeout (the SMTP session will not be terminated in the absence of incoming traffic); the default value is 30 s
<hour_differential>	Number	Represents the value of hour differential, in range [-12; 12] (the default value is 0)
<minute_differential>	Number	Represents the value of minute differential, in range [0; 59] (the default value is 0). This is a mandatory parameter if <op_code>=6 and <hour_differential> is specified.
<port>	Number	The port used by the SMTP client, in range [1; 65535] (the default value is 25).
<param_val1>		Type and content depend on <op_code> parameter (see details above). If the parameter is not specified, the value for the corresponding <op_code> is reset
<param_val2>		Type and content depend on related <op_code> parameter (see details above)

29.1.4 Notes

- <op_code>=0 and <op_code>=1 are mutually exclusive. If <param_val1> value for <op_code>=0 is specified by the user, then value for <op_code>=1 is reset or viceversa.

SARA-G300 / SARA-G310 / SARA-G340-00S / SARA-G340-01S / SARA-G350-00S / SARA-G350-00X / SARA-G350-01B / SARA-G350-01S / LEON-G1

- The <port> parameter is not supported. The default port (25) is used.

29.2 SMTP mail control +USMTPM

+USMTPM						
Modules	SARA-G340 SARA-G350 SARA-G350-53S LEON-G1					
Attributes	**Syntax**	**PIN required**	**Settings saved**	**Can be aborted**	**Response time**	**Error reference**
	full	No	No	No	< 1 s	Appendix A.9.1

29.2.1 Description

Sets (or resets) the necessary parameters for envelope and body of a mail for the subsequent transmission via SMTP protocol. To configure the settings for envelope and body of mail the set command needs to be issued for each <op_code>.

In the set command, if none parameter is issued, the module resets all the internal SMTP buffers to create a new mail.

29.2.2 Syntax

Type	Syntax	Response	Example
Action	AT+USMTPM	OK	OK
SMTP mail control generic syntax			
Set	AT+USMTPM=<op_code>,<param_val1>[,<param_val2>,<param_val3>]	OK	AT+USMTPM=0,"ugo.rossi@u-blox.com" OK
SMTP mail sender address			
Set	AT+USMTPM=0,<mail_sender>	OK	AT+USMTPM=0,"ugo.rossi@u-blox.com" OK
SMTP "Reply-To" field			
Set	AT+USMTPM=1,<reply_to>	OK	AT+USMTPM=1,"ugo.rossi@u-blox.com" OK
SMTP mail receiver address			
Set	AT+USMTPM=2,<mail_receiver>	OK	AT+USMTPM=2,"ugo.rossi@u-blox.com" OK
SMTP mail subject			
Set	AT+USMTPM=3,<mail_subject>	OK	AT+USMTPM=3,"This is the subject" OK
SMTP mail text			
Set	AT+USMTPM=4,<mail_text>	OK	AT+USMTPM=0,"This is the text" OK
SMTP attachment			
Set	AT+USMTPM=5,<mail_attachment_file_name>,<mail_attachment_media_type>,<mail_attachment_media_sub-type>	OK	AT+USMTPM=5,"screenshot.jpg",2,"jpg" OK
SMTP enhanced mode			
Set	AT+USMTPM=6	OK	AT+USMTPM=6

Type	Syntax	Response	Example
	@<mail_text><Ctrl-Z>		@<mail text><Ctrl-Z> OK
Test	AT+USMTPM=?	+USMTPM: (list of supported <op_code>s) OK	+USMTPM: (0-5) OK

29.2.3 Defined values

Parameter	Type	Description
<op_code>	Number	• 0: set the mail sender address • 1: set the "Reply-To" field • 2: add the mail receiver. Up to 10 different recipient addresses can be added for each new mail • 3: set the mail subject • 4: set the mail text • 5: add an attachment. The attachment must be a file stored in the file system and accessible by the SMTP client. Up to 10 attachments can be added for each new mail • 6: set the mail text in enhanced mode: it is possible to write text messages up to 4096 bytes. After having issued the AT+USMTPM=6 command a '@' prompt will be displayed. After this prompt it is possible to write the mail text. To finish the input send the special character Ctrl-Z (0x1A). Anyway if the total length of 4096 characters is reached, the command automatically exits from the input mode
<mail_sender>	String	Mandatory parameter representing the text string of the sender address. It must be in the form "local_part@domain" and not exceed 64 characters
<reply_to>	String	Mandatory parameter representing the text string of the address which reply should be sent to. It must be in form "local_part@domain" and not exceed 64 characters
<mail_receiver>	String	Mandatory parameter representing recipient address text string. It must be in form "local_part@domain" and not exceed 64 characters.
<mail_subject>	String	Mandatory parameter representing the text string of the mail subject. The parameter must not exceed the maximum length of 64 bytes.
<mail_text>	String	Mandatory parameter representing the text string of the mail text. The parameter must not exceed the maximum length of 512 bytes.
<mail_attachment_file_name>	String	Mandatory parameter representing the attachment file name
<mail_attachment_media_type>	Number	Mandatory parameter of the media type. Allowed values: • 0: undefined media type • 1: text media type • 2: image media type • 3: audio media type • 4: video media type • 5: application media type
<mail_attachment_media_sub-type>	String	<param_val3> mandatory parameter, text string of media sub-type
<param_val1>	String	Type and content depend on <op_code> (see details above). If <param_val1> is not specified, the value for the corresponding <op_code> is reset
<param_val2>	Number	Type and content depend on related <op_code> (see details above)
<param_val3>	String	Type and content depend on related <op_code> (see details above)

29.2.4 Notes

- In case <mail_attachment_media_type>= 0 (undefined media type), the empty string ("") can be used as input value for <mail_attachment_media_sub-type> parameter.

29.3 SMTP command +USMTPC

+USMTPC						
Modules	SARA-G340 SARA-G350 SARA-G350-53S LEON-G1					
Attributes	**Syntax**	**PIN required**	**Settings saved**	**Can be aborted**	**Response time**	**Error reference**
	full	No	No	No	< 1 s	+CME Error

29.3.1 Description

Triggers the SMTP action corresponding to <smtp_command> parameter. The response indicates if sending the command request to SMTP process was successful or not. The final SMTP command result will be notified to the user via the +UUSMTPCR URC.

29.3.2 Syntax

Type	Syntax	Response	Example
Set	AT+USMTPC=<smtp_command>	OK	AT+USMTPC=1 OK
Test	AT+USMTPC=?	+USMTPC: (list of supported <smtp_command>s) OK	+USMTPC: (0-2) OK
URC		+UUSMTPCR: <smtp_command>, <smtp_result>[,<reject_rcpt_addr1>[,<reject_rcpt_addr2>[,...]]]	+UUSMTPCR: 1,1

29.3.3 Defined values

Parameter	Type	Description
<smtp_command>	Number	• 0: SMTP quit; terminates the SMTP session issueing a QUIT command, then closes the TCP connection with the SMTP server. • 1: SMTP connect; using the parameters of current SMTP profile (set via AT+USMTP command) connects to the SMTP server via TCP, reads its greeting and sends the HELO command, after which the handshake is complete, and the SMTP client is ready for sending mails. • 2: Send mail; sends the previously prepared mail (set up via AT+USMTPM command) to the connected SMTP server via the MAIL - RCPT - DATA commands sequence.
<smtp_result>	Number	Result code of SMTP operation • 0: Failure • 1: Success • 2: Partial success; this result code can be returned after AT+USMTPC=2 command (Send mail), when the mail has been delivered to some of the specified recipients only. In this case the list of mail addresses of rejected recipients follows.
<reject_rcpt_addrN>	String	Rejected recipient N, in the form "local_part@domain", in case the final result of AT +USMTPC=2 command (Send mail) is a Partial success.

29.4 SMTP error +USMTPER

+USMTPER						
Modules	SARA-G340 SARA-G350 SARA-G350-53S LEON-G1					
Attributes	**Syntax**	**PIN required**	**Settings saved**	**Can be aborted**	**Response time**	**Error reference**
	full	No	No	No	-	SMTP Errors +CME Error

29.4.1 Description

Retrieves the error class and code of the last SMTP operation.

29.4.2 Syntax

Type	Syntax	Response	Example
Set	AT+USMTPER	+USMTPER: <error_class>,<error_code> OK	AT+USMTPER +USMTPER: 0,0 OK

29.4.3 Defined values

Parameter	Type	Description
<error_class>	Number	Value of error class; see Appendix A.9
<error_code>	Number	Value of class-specific error code (reply code if class is 0). The allowed values are listed in Appendix A.9.3

30 Ping

TOBY-L2 / MPCI-L2 / LARA-R2 / TOBY-R2 / SARA-U2 / LISA-U2 / SARA-G4 / SARA-G3 / LEON-G1
The ping service requires the user to define and activate a connection profile before executing the +UPING command. See +UPSD, +UPSDA and +UPSND AT commands for establishing a PSD connection.

SARA-G3 / LEON-G1
The ping service requires the user to define and activate a connection profile before executing the +UPING command. See +UCSD, +UCSDA and +UCSND AT commands for establishing a CSD connection.

30.1 Ping command +UPING

+UPING						
Modules	TOBY-L200-02S TOBY-L200-03A TOBY-L200-03S TOBY-L210-02S TOBY-L210-03A TOBY-L210-03S TOBY-L210-62S TOBY-L220 TOBY-L280 MPCI-L200-02S MPCI-L200-03S MPCI-L210-02S MPCI-L210-03S MPCI-L220 MPCI-L280					
	LARA-R2 TOBY-R2					
	SARA-U2 LISA-U200-01S LISA-U200-02S LISA-U200-03S LISA-U200-52S LISA-U200-62S LISA-U200-83S LISA-U201 LISA-U230 LISA-U260 LISA-U270					
	SARA-G4 SARA-G340 SARA-G350 SARA-G350-53S LEON-G1					
Attributes	**Syntax**	**PIN required**	**Settings saved**	**Can be aborted**	**Response time**	**Error reference**
	full	No	No	No	-	+CME Error Ping Error

30.1.1 Description

The ping command is the common method to know if a remote host is reachable on the internet.

The ping functionality is based on the ICMP protocol (Internet Control Message Protocol), it is part of the Internet Protocol Suite as defined in RFC 792 [57]. ICMP messages are typically generated in response to errors in IP datagrams or for diagnostic / routing purposes.

The ping command sends an ICMP echo request to the remote host and waits for its ICMP echo reply. If the echo reply packet is not received, it might mean that the remote host is not reachable.

The ping command could be used also to measure e.g. the RTT (Round Trip Time, the time needed by a packet to go to the remote host and come back) and the TTL (Time To Live, it is a value to understand how many gateway a packet has gone through).

The AT+UPING allows the user to execute a ping command from the module to a remote peer. The results of the ping command execution is notified by means of these URCs:

- **+UUPING**: it reports the +UPING command result when no error occurred.
- **+UUPINGER**: it is raised if an error is occurred while processing the +UPING command. The URC reports the code of occurred error (see Ping error codes to get the meanings of the error result codes).

Some network operators may disallow ICMP packets traffic on their network, this means that the +UPING command may not work.

Some remote hosts might not reply to ICMP echo request for security reasons (e.g. firewall settings).

Some remote hosts might not reply to ICMP echo request if the data size of the echo request is too big.

If a remote peer does not reply to an ICMP echo request, it does not mean that for sure the peer cannot be reached in another way.

30.1.2 Syntax

Type	Syntax	Response	Example
Set	AT+UPING=<remote_host>[,<retry_num>,<p_size>,<timeout>,<ttl>]	OK	AT+UPING="www.google.com" OK
Test	AT+UPING=?	+UPING: "remote_host",(list of supported <retry_num>),(list	+UPING: "remote_host",(1-64),(4-1460),(10-60000),(1-255)

Type	Syntax	Response	Example
		of supported <p_size>),(list of supported <timeout>),(list of supported <ttl>) OK	OK
URC		+UUPING: <retry_num>,<p_size>,<remote_hostname>,<remote_ip>,<ttl>,<rtt>	+UUPING: 1,32,"www.l-google.com","72.14.234.104",55,768
URC		+UUPINGER: <error_code>	+UUPINGER: 12

30.1.3 Defined values

Parameter	Type	Description
<remote_host>	String	IP address (dotted decimal representation) or domain name of the remote host: • Maximum length: 128 characters
<retry_num>	Number	Indicates how many times iterate the ping command: • Range: 1-64 • Default value: 4
<p_size>	Number	Size in bytes of the echo packet payload: • TOBY-L2 / MPCI-L2 / LARA-R2 / TOBY-R2 / SARA-U2 / LISA-U2 / SARA-G4 / SARA-G3 / LEON-G1 - The range goes from 4 to 1460. The default value is 32.
<timeout>	Number	The maximum time in milliseconds to wait for a echo reply response: • Range: 10-60000 • Default value: 5000
<ttl>	Number	The value of TTL to be set for the outgoing echo request packet. In the URC it provides the TTL value received in the incoming packet: • Range: 1-255 • Default value: 32
<remote_hostname>	String	String representing the domain name (if available) of the remote host. It this information is not available, it will be an empty string (i.e. "").
<remote_ip>	String	String representing the remote host IP address in dotted decimal form.
<rtt>	Number	RTT value, the time elapsed in milliseconds before receiving the echo reply response from the remote host.
<error_code>	Number	The error occurred while processing the +UPING command. See Ping error codes for the list of the allowed error result codes.

30.1.4 Notes

- If the +UUPING URC reports <rtt> = -1 the timeout is elapsed (no response received).
- If the first +UUPING URC reports <rtt> = -2 the TTL used in the ping request is too low.
- Some network operators may return an ICMP time exceeded message when the remote host is not reachable. In these cases the first +UUPING URC reports <rtt> = -1 and the subsequent +UUPING URC report <rtt> = -2.

SARA-G300 / SARA-G310 / SARA-G340-00S / SARA-G340-01S / SARA-G350-00S / SARA-G350-00X / SARA-G350-01B / SARA-G350-01S / LEON-G1

- The first +UUPING URC reporting <rtt> = -2 is not supported. As a consequence a TTL too low hint is not available.

LEON-G1

- The command uses the TCP/IP resources in an exclusive way. All the other TCP/IP operations executed after the execution of the +UPING command will wait for the execution of this command.

30.2 ICMP echo reply configuration +UDCONF=4

+UDCONF=4						
Modules	TOBY-L200-02S TOBY-L200-03A TOBY-L200-03S TOBY-L210-02S TOBY-L210-03A TOBY-L210-03S TOBY-L210-62S TOBY-L220 TOBY-L280 MPCI-L200-02S MPCI-L200-03S MPCI-L210-02S MPCI-L210-03S MPCI-L220 MPCI-L280					
	LARA-R2 TOBY-R2					
	SARA-U2 LISA-U200-01S LISA-U200-02S LISA-U200-03S LISA-U200-52S LISA-U200-62S LISA-U200-83S LISA-U201 LISA-U230 LISA-U260 LISA-U270					
	SARA-G4 SARA-G340 SARA-G350 SARA-G350-53S					
Attributes	**Syntax**	**PIN required**	**Settings saved**	**Can be aborted**	**Response time**	**Error reference**
	full	No	No	No	-	+CME Error

30.2.1 Description

Enables/disables the ICMP echo reply (ping response).

☞ Not all the network operators allow the ping traffic on their network.

30.2.2 Syntax

Type	Syntax	Response	Example
Set	AT+UDCONF=4,<icmp_echo_reply>	OK	AT+UDCONF=4,1 OK
Read	AT+UDCONF=4	+UDCONF: 4,<icmp_echo_reply> OK	AT+UDCONF=4 +UDCONF: 4,1 OK

30.2.3 Defined values

Parameter	Type	Description
<icmp_echo_reply>	Number	Enables or disables the ping response when a remote host performs a ping request to the module • 0: ping response disabled (the module does not reply to remote pings) • 1 (factory-programmed value): ping response enabled (the module replies to remote pings)

31 GNSS

31.1 NMEA

u-blox cellular modules support reading NMEA strings from the GNSS receiver through AT commands.

Before being able to read a specific NMEA string, it is necessary to activate the storage of the last value of that particular NMEA string. If storing a particular NMEA string was not activated, the response to the query will be "0,NULL". The last value of a specific NMEA string is saved in RAM and is made available even after the GNSS receiver switch off.

The NMEA standard differentiates between GPS, GLONASS and Multi-GNSS receivers using a different 'Talker ID'. Depending upon device model and system configuration, the u-blox receiver could output messages using any one of these Talker IDs.

By default, the receivers configured to support GPS, SBAS and QZSS use the 'GP' Talker ID, receivers configured to support GLONASS use the 'GL' Talker ID, receivers configured to support BeiDou use the 'GB' Talker ID and receivers configured for any combinations of multiple GNSS use the 'GN' Talker ID.

Even if the NMEA specification indicates that the GGA message is GPS specific, u-blox receivers support the output of a GGA message for each of the Talker IDs.

☞ As a factory-programmed setting, the cellular modules configure the GNSS receiver through +UGPS AT command to not provide the NMEA sentences.

☞ When reading an NMEA message, if the response value is "1,Not available" then the storing of the NMEA string is activated but this information has not been still sent to the user, if this persist check that the relative NMEA message is enabled. To enable it use the +UGUBX command (for further information see the UBX-CFG-MSG message in the u-blox GNSS Protocol Specification).

31.2 GNSS power management +UGPS

+UGPS						
Modules	LARA-R202 LARA-R203 LARA-R211 LARA-R220 LARA-R280 TOBY-R2					
	SARA-U2 LISA-U200-01S LISA-U200-02S LISA-U200-03S LISA-U200-52S LISA-U200-62S LISA-U200-83S LISA-U201 LISA-U230 LISA-U260 LISA-U270 LISA-U1					
	SARA-G340 SARA-G350 SARA-G350-53S LEON-G1					
Attributes	**Syntax**	**PIN required**	**Settings saved**	**Can be aborted**	**Response time**	**Error reference**
	full	No	No	No	< 10 s	+CME Error

31.2.1 Description

Switches on or off a u-blox GNSS receiver connected to the cellular module via a dedicated DDC (I^2C) interface. For more details about the connection between cellular module and u-blox GNSS receiver see the corresponding module system integration manual.

Furthermore the command sets the aiding type to be used to enhance GNSS performance, e.g. decreasing Time To First Fix (TTFF), thus allowing to calculate the position in a shorter time with higher accuracy. The following aiding types are supported:

- Local aiding: the cellular module automatically uploads data such as ephemeris, almanac, last position, time, etc. from the GNSS receiver into its local memory, and restores back the GNSS receiver at the next power up of the GNSS module (if the data are still valid, otherwise it uses GSM information such as country code for a rough position estimation)
- AssistNow Online: a connection profile (either PSD or CSD) must be defined and activated before selecting the AssistNow Online; see the +UGAOP and +UGSRV command descriptions. If CellLocate® is used, the first HTTP profile will be properly configured
- AssistNow Offline: a connection profile (either PSD or CSD) must be defined and activated before selecting the AssistNow Offline if the almanac file must be downloaded; see the +UGAOF and +UGSRV command descriptions.

☞ LEON-G1
The AssistNow Offline enables AID-ALPSRV UBX message on all the GNSS communication ports.

- AssistNow Autonomous: based on a broadcast ephemeris downloaded from the satellite (or obtained by AssistNow Online) the receiver can autonomously generate an accurate satellite orbit representation («AssistNow Autonomous data») that is usable for navigation much longer than the underlying broadcast ephemeris was intended for. This makes downloading new ephemeris or aiding data for the first fix unnecessary for subsequent start-ups of the receiver.

☞ LISA-U200-00S / LISA-U200-01S / LISA-U200-02S / LISA-U200-52S / LISA-U200-62S / LISA-U230 / LISA-U260 / LISA-U270 / LISA-U1 / LEON-G1
If using CellLocate® and HTTP commands, the HTTP profiles in the range 1-3 must be used.

☞ LARA-R2 / TOBY-R2 / SARA-U2 / LISA-U2 / LISA-U1 / SARA-G3 / LEON-G1
To establish a PSD connection see the +UPSD, +UPSDA and +UPSND AT commands.

☞ SARA-G3 / LEON-G1
To establish a CSD connection see the +UCSD, +UCSDA and +UCSND AT commands.

☞ The AssistNow Autonomous feature may be not fully supported on all Multi-GNSS receivers. For more details on AssistNow Autonomous feature see the corresponding u-blox-GNSS receiver description.

For a more detailed description on aiding modes and possible suggestions, see the GNSS Implementation Application Note [52].

It is possible to combine different aiding modes: to enable them the sum of the <mode> value of the interested aiding modes is needed (e.g.: aiding <mode>=3 means local aiding plus AssistNow Offline). Moreover it is also possible to switch from one aiding mode to another one without powering off the GNSS receiver. If the following sequence is provided (AT+UGPS=1,1 and then AT+UGPS=1,5) at the beginning the GNSS receiver will power on with local aiding support and after the second command will be added the AssistNow Online. After the second command the local aiding is not restarted, therefore the +UUGIND URC for it will not be sent again.

The latest u-blox GNSS products are multi-GNSS receivers capable of receiving and processing signals from multiple Global Navigation Satellite Systems (GNSS). u-blox concurrent GNSS receivers are multi-GNSS receivers that can acquire and track satellites from more than one GNSS system at the same time, and utilize them for positioning. The <GNSS_systems> parameter configures the GNSS receiver into the required mode of operation. It is possible to combine different GNSS systems. The combinations of systems, which can be configured simultaneously depends on the receivers capability to receive several carrier frequencies. See the corresponding GNSS receiver data sheet for the supported GNSS systems. If the Assisted GNSS unsolicited indication is enabled, the +UUGIND URC will provide the current activated combinations of systems.

31.2.2 Syntax

Type	Syntax	Response	Example
Set	AT+UGPS=<mode>[,<aid_mode>[,<GNSS_systems>]]	OK	AT+UGPS=1,0,1 OK
Read	AT+UGPS?	+UGPS: <mode>[,<aid_mode>[,<GNSS_systems>]] OK	+UGPS: 1,0,1 OK
Test	AT+UGPS=?	+UGPS: (list of supported <mode>s),(list of supported <aid_mode>),(list of supported <GNSS_systems>) OK	+UGPS: (0-1),(0-15),(1-127) OK

31.2.3 Defined values

Parameter	Type	Description
<mode>	Number	• 0 (default value): GNSS receiver powered off • 1: GNSS receiver powered on
<aid_mode>	Number	Supported aiding modes; the parameter is mandatory if <mode>=1; all these allowed values can be combined together: • 0 (default value): no aiding • 1: automatic local aiding • 2: AssistNow Offline • 4: AssistNow Online • 8: AssistNow Autonomous

Parameter	Type	Description
<GNSS_systems>	Number	Bitmask for combining the supported GNSS types; the parameter is optional and the allowed values can be combined together. The default value is 3 (GPS+SBAS): • 1: GPS • 2: SBAS • 4: Galileo • 8: BeiDou • 16: IMES • 32: QZSS • 64: GLONASS

31.2.4 Notes

- To know the allowed combinations of GNSS type for <GNSS_systems> see the corresponding GNSS receiver documentation.
- If <GNSS_systems> type is not supported by the GNSS receiver, the set command turns on the GNSS receiver with built-in supported type. The current <GNSS_systems> can be queried by means of the read command or the +UUGIND URC.
- An error result code is provided in the following cases:
  - <mode>, <aid_mode> or <GNSS_systems> values are out of range
  - <mode> is set to 1 without <aid_mode> value
  - Attempt to power off the GNSS when it is already off
  - The value of <aid_mode> to be set is equal to the current GNSS aiding mode and the value of <GNSS_systems> to be set is equal to the last requested <GNSS_systems>
- The parameter <GNSS_systems> is displayed in the information text response of the read command only if the connected GNSS receiver supports Multi-GNSS

LARA-R211 / TOBY-R2

- The command is not supported by LARA-R211-02B-00, TOBY-R200-02B-00 and TOBY-R202-02B-00.

SARA-U201-04A / SARA-U201-04B / SARA-U201-04X / SARA-U270-04B

- In case the AUX UART is enabled (that is the active +USIO variant is 4,5 or 6), since the I^2C lines are not available, the command immediately provides an error result code in case of <mode> set to 1 ("+CME ERROR: 3" if +CMEE=1 or "+CME ERROR: operation not allowed" if +CMEE=2)

LISA-U200-00S / LISA-U200-01S / LISA-U200-02S / LISA-U200-52S / LISA-U200-62S / LISA-U230 / LISA-U260 / LISA-U270 / SARA-G300 / SARA-G310 / SARA-G340-00S / SARA-G350-00S / SARA-G350-00X / LEON-G1

- The parameter <GNSS_systems> is not supported.

31.3 Assisted GNSS unsolicited indication +UGIND

+UGIND						
Modules	LARA-R202 LARA-R203 LARA-R211 LARA-R220 LARA-R280 TOBY-R2					
	SARA-U2 LISA-U200-01S LISA-U200-02S LISA-U200-03S LISA-U200-52S LISA-U200-62S LISA-U200-83S LISA-U201 LISA-U230 LISA-U260 LISA-U270 LISA-U1					
	SARA-G340 SARA-G350 SARA-G350-53S LEON-G1					
Attributes	**Syntax**	**PIN required**	**Settings saved**	**Can be aborted**	**Response time**	**Error reference**
	full	No	No	No	-	+CME Error

31.3.1 Description

Enables or disables sending of URCs from MT to TE in the case of GNSS aiding operations. The <mode> parameter controls the processing of URCs specified within this command.

The URC returns the result of an assisted GNSS operation. This information is sent to all the interfaces. The URC is provided only if one or more aiding modes are enabled (for more details see the +UGPS and +UGAOP command descriptions).

There can be more than a +UUGIND URC for a single aiding operation: the +UUGIND is reported for each error. For instance if the local aiding is enabled and there are no space left in the file system after +UGPS=0, there will be an error for every failure writing on FFS.

The commands +UGAOS=0 and +UGAOS=1 both relate to the GNSS local aiding, so the unsolicited message will be +UUGIND=1,x in both cases.

Local aiding and AssistNow Autonomous will produce URC both after GNSS power on and before GNSS power off because some data are transferred from the GNSS receiver to the cellular module.

If the connected GNSS receiver is Multi-GNSS then an additional +UUGIND=0,<GNSS_systems> URC for the currently activated GNSS systems is displayed.

☞ LEON-G1
The URCs during GNSS power down phase are generated between the power off command (+UGPS=0) and the actual switch off (OK result code).

31.3.2 Syntax

Type	Syntax	Response	Example
Set	AT+UGIND=<mode>	OK	AT+UGIND=1 OK
Read	AT+UGIND?	+UGIND: <mode> OK	+UGIND: 1 OK
Test	AT+UGIND=?	+UGIND: (list of supported <mode>'s) OK	+UGIND: (0-1) OK
URC		Current activated GNSS system: +UUGIND: 0,<GNSS_systems>	+UUGIND: 0,3
		GNSS aiding status: +UUGIND: <aid_mode>,<result>	+UUGIND: 4,5

31.3.3 Defined values

Parameter	Type	Description
<mode>	Number	URC configuration: • 0 (default value): disabled • 1: enabled
<aid_mode>	Number	Provides the supported aiding mode: • 0: GNSS system(s) • 1: automatic local aiding • 2: AssistNow Offline • 4: AssistNow Online • 8: AssistNow Autonomous
<GNSS_systems>	Number	Current activated GNSS types; the allowed values can be combined together: • 1: GPS • 2: SBAS • 4: Galileo • 8: BeiDou • 16: IMES • 32: QZSS • 64: GLONASS
<result>	Number	Represents the result of the aiding operation: • 0: No error • 1: Wrong URL (for AssistNow Offline) • 2: HTTP error (for AssistNow Offline) • 3: Create socket error (for AssistNow Online) • 4: Close socket error (for AssistNow Online) • 5: Write to socket error (for AssistNow Online) • 6: Read from socket error (for AssistNow Online) • 7: Connection/DNS error (for AssistNow Online) • 8: File system error • 9: Generic error

Parameter	Type	Description
		• 10: No answer from GNSS (for local aiding and AssistNow Autonomous) • 11: Data collection in progress (for local aiding) • 12: GNSS configuration failed (for AssistNow Autonomous) • 13: RTC calibration failed (for local aiding) • 14: feature not supported (for AssistNow Autonomous) • 15: feature partially supported (for AssistNow Autonomous) • 16: authentication token missing (required for aiding for u-blox M8 and future versions)

31.3.4 Notes

LARA-R211 / TOBY-R2

- The command is not supported by LARA-R211-02B-00, TOBY-R200-02B-00 and TOBY-R202-02B-00.

31.4 GNSS profile configuration +UGPRF

+UGPRF						
Modules	LARA-R202 LARA-R203 LARA-R211 LARA-R220 LARA-R280 TOBY-R2					
	SARA-U2 LISA-U200-01S LISA-U200-02S LISA-U200-03S LISA-U200-52S LISA-U200-62S LISA-U200-83S LISA-U201 LISA-U230 LISA-U260 LISA-U270 LISA-U1					
	SARA-G340 SARA-G350 SARA-G350-53S LEON-G1					
Attributes	**Syntax**	**PIN required**	**Settings saved**	**Can be aborted**	**Response time**	**Error reference**
	full	No	NVM	No	-	+CME Error

31.4.1 Description

Configures the data flow to and from a u-blox GNSS receiver connected to the cellular module. The data flow is possible to and from the:

- UART (via multiplexer)
- USB (or alternatively AUX UART)
- Over the air to a remote host: To send data over the air an internet connection must be active and there must be at least one free TCP socket (the GNSS shares the socket pool with the other applications). Setting up an Internet connection and network registration is not part of this command and must be handled by the user separately from this command.
- Into a file on the cellular module: A file with GNSS data can be accessed via +ULSTFILE command. The file name is automatically chosen by the cellular module as a unique ID based on date and time or a further incremental number (e.g. "GPS_200910061500" or "GPS_20091006_001" according to the used cellular module). When the files size reaches 500 kB the file is closed and no more data is saved. It is possible to save further data by restarting the GNSS (this will create a new file)

☞ LARA-R2 / TOBY-R2 / SARA-U2 / LISA-U2 / LISA-U1 / SARA-G3 / LEON-G1
To establish a PSD connection see the +UPSD, +UPSDA and +UPSND AT commands.

☞ SARA-G3 / LEON-G1
To establish a CSD connection see the +UCSD, +UCSDA and +UCSND AT commands.

It is possible to send GNSS data to multiple destinations at the same time by summing the <GNSS_I/O_configuration> values of each required destinations (e.g. if AT+UGPRF=6 the data will be sent on multiplexer and stored in a file in the file system).

The messages to be output by the u-blox GNSS receiver need to be activated separately with UBX-CFG-MSG configuration messages according to the GNSS Receiver Protocol Specification.

☞ It is not possible to select the GNSS data flow to and from USB (or alternatively AUX UART) and multiplexer concurrently.

☞ The configuration of the GNSS profile must be performed only when GNSS is switched off, otherwise an error result code will be displayed.

31.4.2 Syntax

Type	Syntax	Response	Example
Set	AT+UGPRF=<GNSS_I/O_configuration>[,<IP Port>,<server address string>]	OK	AT+UGPRF=0 OK
Read	AT+UGPRF?	+UGPRF: <GNSS_I/O_configuration>,<IP port>,<server address string> OK	+UGPRF: 0,0,"" OK
Test	AT+UGPRF=?	+UGPRF: (list of supported <GNSS_I/O_configuration>),(list of supported <IP port>),<server address string> OK	+UGPRF: (0-127),(0-65535),"addr" OK

31.4.3 Defined values

Parameter	Type	Description
<GNSS_IO_configuration>	Number	• 0 (default value and factory-programmed value): no data flow to multiplexer, file or IP address • 1: GNSS data flow to and from USB (or alternatively AUX UART) • 2: GNSS data flow to and from multiplexer • 4: GNSS data flow saved to file • 8: GNSS data flow over the air to an Internet host • 16: GNSS data ready function • 32: GNSS RTC sharing function • 64: reserved • 128: reset the GNSS after the GNSS power on (see AT+UGPS command description) • 256: use the auxiliary GNSS receiver instead of the default one. If the feature is not provided then an error result code will be displayed
<IP port>	Number	IP port of the server where the GNSS data are sent (default value and factory-programmed value: 0). If GNSS data flow over the air is enabled the parameter is mandatory otherwise is forbidden.
<server address string>	String	Address string of the server where the GNSS data are sent (default value and factory-programmed value: ""). If GNSS data flow over the air is enabled the parameter is mandatory otherwise is forbidden. The address could be provided in both URL or IP format and the maximum length of the string is 47 characters.

31.4.4 Notes

LARA-R2 / TOBY-R2

- <GNSS_IO_configuration>=32 (GNSS RTC sharing function), <GNSS_IO_configuration>=128 (GNSS reset after the GNSS power on) and <GNSS_IO_configuration>=256 (use an auxiliary GNSS receiver) are not supported.

LARA-R211 / TOBY-R2

- The command is not supported by LARA-R211-02B-00, TOBY-R200-02B-00 and TOBY-R202-02B-00.

SARA-U2 / LISA-U2 / LISA-U1

- <GNSS_IO_configuration>=128 (GNSS reset after the GNSS power on) and <GNSS_IO_configuration>=256 (use an auxiliary GNSS receiver) are not supported.

SARA-U201-04A / SARA-U201-04B / SARA-U201-04X / SARA-U270-04B

- AUX UART interface can not be configured as GNSS tunneling. See +USIO command description for details.

SARA-G340 / SARA-G350

- <GNSS_IO_configuration>=256 (use an auxiliary GNSS receiver) is not supported.
- The GNSS data flow on the multiplexer channel is only in output toward the cellular module; the input to the GNSS receiver is not supported.
- The USB interface is not supported.

SARA-G340-00S / SARA-G340-01S / SARA-G350-00S / SARA-G350-00X / SARA-G350-01B / SARA-G350-01S

- <GNSS_IO_configuration>=128 (GNSS reset after the GNSS power on) is not supported.

SARA-G340-02S / SARA-G340-02X / SARA-G350-02A / SARA-G350-02S / SARA-G350-02X

- <GNSS_IO_configuration>=128 (GNSS reset after the GNSS power on) is not supported by SARA-G340-02S-00, SARA-G340-02X-00, SARA-G350-02S-00, SARA-G350-02X-00, SARA-G350-02A-00, SARA-G350-02A-01.
- Configure the AUX UART interface as GNSS tunnelling interface to support the GNSS data flow over it (in the active +USIO variant), before the GNSS receiver is switched on (by means of +UGPS AT command). See +USIO command description for details.

LEON-G1

- <GNSS_IO_configuration>=128 (GNSS reset after the GNSS power on) and <GNSS_IO_configuration>= 256 (use an auxiliary GNSS receiver) are not supported.
- The server address string parameter accepts only IP address in dotted notation, thus it has a maximum length of 15 characters.
- A delay time of at least 3 s after the power on is required before issuing this command.
- The USB interface is not supported.
- UBX-AID messages are not passed over the multiplexer if AssistNow Online, AssistNow Offline or Local Aiding is enabled (see AT+UGPS command description).

31.5 AssistNow Online configuration +UGAOP

+UGAOP						
Modules	LARA-R202 LARA-R203 LARA-R211 LARA-R220 LARA-R280 TOBY-R2					
	SARA-U2 LISA-U200-01S LISA-U200-02S LISA-U200-03S LISA-U200-52S LISA-U200-62S LISA-U200-83S LISA-U201 LISA-U230 LISA-U260 LISA-U270 LISA-U1					
	SARA-G340 SARA-G350 SARA-G350-53S LEON-G1					
Attributes	**Syntax**	**PIN required**	**Settings saved**	**Can be aborted**	**Response time**	**Error reference**
	full	No	NVM	No	-	+CME Error

31.5.1 Description

Configures the network connection to an AssistNow Online server. Use of this command is only necessary if changes to the factory-programmed configuration are required.

The AssistNow Online server is accessed with the User Datagram Protocol (UDP). The GNSS shares the socket pool with the other applications, to execute AssistNow the cellular module will try to open a new socket without dropping any opened socket, if there is no socket available then the GNSS will start and no aiding operation is performed. By default, the cellular module connects to the u-blox' AssistNow Online server. The authentification on u-blox' AssistNow Online server is done automatically (without giving u-blox any information that could be used to identify the customer and/or end user); username and passwords are not required. The access to a proxy server is possible.

Three different modes of operation are supported:

- AssistNow Online data are automatically downloaded from the server when the GNSS receiver is started up (i.e. with command +UGPS and <mode>=1 and <aid_mode>=4)
- AssistNow Online data are only requested upon the reception of a +UGAOS AT command
- AssistNow Online data are kept alive. This is done by periodically (every 2 hours) accessing the AssistNow Online to keep the ephemeris alive.

☞ Setting up Internet connection and network registration is not part of this command and must be handled by the user separately to this command.

☞ LARA-R2 / TOBY-R2 / SARA-U2 / LISA-U2 / LISA-U1 / SARA-G3 / LEON-G1
To establish a PSD connection see the +UPSD, +UPSDA and +UPSND AT commands.

☞ SARA-G3 / LEON-G1
To establish a CSD connection see the +UCSD, +UCSDA and +UCSND AT commands.

☞ Where supported, it is preferred to use the +UGSRV AT command.

31.5.2 Syntax

Type	Syntax	Response	Example
Set	AT+UGAOP=<hostname>,<server_port>,<latency>,<mode>	OK	AT+UGAOP="eval1-les.services.u-blox.com",46434,1000,0 OK
Read	AT+UGAOP?	+UGAOP: <hostname>,<server_port>,<latency>,<mode> OK	+UGAOP: "eval1-les.services.u-blox.com",46434,1000,0 OK

31.5.3 Defined values

Parameter	Type	Description
<hostname>	String	Host name of the server (factory-programmed value: eval1-les.services.u-blox.com); the maximum length is 47 characters
<server_port>	Number	Value in the range 0 - 65535. (factory-programmed value: 46434)
<latency>	Number	Expected network latency value from AssistNow Online server to client, in milliseconds. The range goes from 0 to 3600 ms. (factory-programmed value: 1000 ms)
<mode>	Number	Mode of operation of AssistNow Online data management • 0 (factory-programmed value): AssistNow Online data are downloaded at GNSS receiver power up • 1: AssistNow Online data automatically kept alive • 2: manual AssistNow Online data download

31.5.4 Notes

LARA-R211 / TOBY-R2

- The command is not supported by LARA-R211-02B-00, TOBY-R200-02B-00 and TOBY-R202-02B-00.

LEON-G1

- A delay time of at least 3 s after the power on is required before issuing this command.

31.6 AssistNow Offline configuration +UGAOF

+UGAOF						
Modules	LARA-R202 LARA-R203 LARA-R211 LARA-R220 LARA-R280 TOBY-R2					
	SARA-U2 LISA-U200-01S LISA-U200-02S LISA-U200-03S LISA-U200-52S LISA-U200-62S LISA-U200-83S LISA-U201 LISA-U230 LISA-U260 LISA-U270 LISA-U1					
	SARA-G340 SARA-G350 SARA-G350-53S LEON-G1					
Attributes	**Syntax**	**PIN required**	**Settings saved**	**Can be aborted**	**Response time**	**Error reference**
	full	No	NVM	No	-	+CME Error

31.6.1 Description

Configures the network connection to an AssistNow Offline server. Use of this command is only necessary if changes to the factory-programmed configuration are required.

Access to an AssistNow Offline server is done with HTTP. The GNSS shares the socket pool with the other applications, to execute AssistNow Offline the cellular module will try to open a new socket without dropping any opened socket, if there is no socket available then the GNSS will start and no aiding operation is performed. By default, the cellular module connects to the 14 day file on the u-blox' AssistNow Offline server.

☞ Setting up Internet connection and network registration is not part of this command and must be handled by the user separately from this command.

☞ Where supported, it is preferred to use the +UGSRV AT command.

31.6.2 Syntax

Type	Syntax	Response	Example
Set	AT+UGAOF=<file_url>,<reserved>,<retry timeout>,<max_retry_attempts>	OK	AT+UGAOF="http://alp.u-blox.com/current_14d.alp",0,1,3 OK
Read	AT+UGAOF?	+UGAOF: <file_url>,0,<retry timeout>,<max_retry_attempts> OK	+UGAOF: "http://alp.u-blox.com/current_14d.alp",0,1,3 OK

31.6.3 Defined values

Parameter	Type	Description
<file_url>	String	URL of AssistNow Offline file (the maximum length is 255 characters including "http://"). Allows choosing the size/validity of the file. The factory-programmed value is http://alp.u-blox.com/current_14d.alp
<Reserved>		RFU
<Retry Timeout>	Number	Timeout in minutes after a failed download for the next download attempt (0 ... 999) (factory-programmed value: 1)
<max_retry_attempts>	Number	Maximum number of attempts in case of failed download (0-5); the factory-programmed value is 3.

31.6.4 Notes

LARA-R211 / TOBY-R2

- The command is not supported by LARA-R211-02B-00, TOBY-R200-02B-00 and TOBY-R202-02B-00.

LEON-G1

- A delay time of at least 3 s after the power on is required before issuing this command.

31.7 Aiding server configuration +UGSRV

+UGSRV						
Modules	LARA-R202 LARA-R203 LARA-R211 LARA-R220 LARA-R280 TOBY-R2					
	SARA-U2 LISA-U200-03S LISA-U200-83S LISA-U201					
	SARA-G340-01S SARA-G340-02S SARA-G340-02X SARA-G350-01B SARA-G350-01S SARA-G350-02A SARA-G350-02S SARA-G350-02X SARA-G350-53S					
Attributes	**Syntax**	**PIN required**	**Settings saved**	**Can be aborted**	**Response time**	**Error reference**
	partial	No	NVM	No	-	+CME Error

31.7.1 Description

Configures the network connection to a Multi GNSS Assistance (MGA) server. The configuration is saved in NVM and applied at the next GNSS power cycle. The MGA server is accessed with the HTTP. This assistance mode requires a packet data connection to exchange information with u-blox servers. By default, the cellular module connects to u-blox' primary MGA server; if the connection fails then the cellular module connects to u-blox' secondary MGA server. Authorization tokens are used as a means of authorizing access to the u-blox services and for gathering anonymised statistics. To obtain a token customers should use the form in http://www.u-blox.com/services-form.html. The set command registers a token for gathering assistance data from MGA servers. Once a token is set it cannot be cleared so that registered hostnames in +UGAOP and +UGAOF commands are discarded.

☞ Setting up Internet connection and network registration is not part of this command and must be handled by the user separately to this command.

☞ LARA-R2 / TOBY-R2 / SARA-U2 / LISA-U2 / SARA-G3
See +UPSD, +UPSDA and +UPSND AT commands for establishing a PSD connection.

☞ SARA-G3
See +UCSD, +UCSDA and +UCSND AT commands for establishing a CSD connection.

31.7.2 Syntax

Type	Syntax	Response	Example
Set	AT+UGSRV=[<mga_primary_server>],[<mga_secondary_server>],<auth_token>[,<days>[,<period>[,<resolution>[,<GNSS_types>[,<mode>[,<datatype>]]]]]]	OK	AT+UGSRV="cell-live1.services.u-blox.com","cell-live2.services.u-blox.com","123456789abcdefghijklm",14,4,1,65,0,1 OK
Read	AT+UGSRV?	+UGSRV: <mga_primary_server>,<mga_secondary_server>,<auth_token>,<days>,<period>,<resolution>,<GNSS_types>,<mode>,<datatype> OK	+UGSRV: "cell-live1.services.u-blox.com","cell-live2.services.u-blox.com","123456789abcdefghijklm",14,4,1,65,0,1 OK
Test	AT+UGSRV=?	+UGSRV: <mga_primary_server>,<mga_secondary_server>,<auth_token>,(list of supported <days>s),(list of supported <period>s),(list of supported <resolution>s),(list of supported <GNSS_types>s),(list of supported <mode>s),(list of supported <datatype>s) OK	+UGSRV: "srv1","srv2","token",(1,2,3,5,7,10,14),(1-5),(1-3),(1,64,65),(0-2),(0-15) OK

31.7.3 Defined values

Parameter	Type	Description
<mga_primary_server>	String	Host name of the primary MGA server; the maximum length is 254 characters. Empty string is not allowed. The default and factory-programmed value is "cell-live1.services.u-blox.com". If the primary MGA server is omitted, the current stored value is preserved.
<mga_secondary_server>	String	Host name of the secondary MGA server; the maximum length is 254 characters. Empty string is not allowed. The default and factory-programmed value is "cell-live2.services.u-blox.com". If the secondary MGA server is omitted, the current stored value is preserved.
<auth_token>	String	Authentication Token for MGA server access.
<days>	Number	The number of days into the future the Offline data for u-blox 7 and previous version should be valid for. The allowed values are: 1, 2, 3, 5, 7, 10 and 14. The default and factory-programmed value is 14.
<period>	Number	The number of weeks into the future the Offline data for u-blox M8 should be valid for. The range of the allowed values goes from 1 to 5. The default and factory-programmed value is 4.
<resolution>	Number	Resolution of offline data for u-blox M8. Allowed values: • 1 (default and factory-programmed value): every day • 2: every other day • 3: every third day
<GNSS_types>	Number	Bitmask for combining the desired GNSS for the (offline) aiding • 1: GPS • 64: GLONASS The default and factory-programmed value is all (65). If the parameter is omitted, the current stored value is preserved.
<mode>	Number	Mode of operation of AssistNow Online data management • 0 (default and factory-programmed value): AssistNow Online data are downloaded at GNSS receiver power up • 1: AssistNow Online data automatically kept alive • 2: manual AssistNow Online data download
<datatype>	Number	Bitmask for combining the desired data types for the (online) aiding • 0: time • 1: position • 2: ephemeris • 4: almanac

Parameter	Type	Description
		• 8: auxiliary • 16: ephemeris of satellites which are likely to be visible from the position estimated by current registered network. This flag has no effect if the ephemeris flag is set to 0. The default and factory-programmed value is all aidings without filter on visible satellites (15)

31.7.4 Notes

LARA-R2 / TOBY-R2 / SARA-U201 / SARA-U260 / SARA-U270-00S / SARA-U270-00X / SARA-U270-03A / SARA-U270-03S / SARA-U270-53S / SARA-U270-73S / SARA-U280 / LISA-U2 / SARA-G3

- <datatype>=16 is not supported.

LARA-R211 / TOBY-R2

- The command is not supported by LARA-R211-02B-00, TOBY-R200-02B-00 and TOBY-R202-02B-00.

SARA-U260-00S / SARA-U270-00S / SARA-U270-00X / SARA-U280-00S / SARA-G340-01S / SARA-G340-02S / SARA-G340-02X / SARA-G350-01B / SARA-G350-01S / SARA-G350-02A / SARA-G350-02S / SARA-G350-02X

- The <mga_primary_server> parameter is mandatory.

31.8 GNSS aiding request command +UGAOS

+UGAOS						
Modules	LARA-R202 LARA-R203 LARA-R211 LARA-R220 LARA-R280 TOBY-R2					
	SARA-U2 LISA-U200-01S LISA-U200-02S LISA-U200-03S LISA-U200-52S LISA-U200-62S LISA-U200-83S LISA-U201 LISA-U230 LISA-U260 LISA-U270 LISA-U1					
	SARA-G340 SARA-G350 SARA-G350-53S LEON-G1					
Attributes	**Syntax**	**PIN required**	**Settings saved**	**Can be aborted**	**Response time**	**Error reference**
	full	No	No	No	< 10 s	+CME Error

31.8.1 Description

Triggers the manual download of AssistNow Online and AssistNow Offline data from the configured server in case automatic AssistNow operation is not enabled. The command returns only when the received data from the server are valid or an error occurs.

The command is also used to trigger the manual upload of local aiding data (e.g. ephemeris, almanac, last position, time, etc) from a u-blox GNSS receiver prior to shutting it down and to restore it into the receiver after the power up of the GNSS receiver (for more details refer to command +UGPS, Chapter 31.2).

31.8.2 Syntax

Type	Syntax	Response	Example
Set	AT+UGAOS=<aid_mode>	OK	AT+UGAOS=0 OK
Test	AT+UGAOS=?	AT+UGAOS: (list of supported <aid_mode>s) OK	+UGAOS: (0-8) OK

31.8.3 Defined values

Parameter	Type	Description
<aid_mode>	Number	• 0: Upload of local aiding data from GNSS receiver to cellular module • 1: Download of local aiding data from the cellular module to the GNSS receiver • 2: AssistNow Offline file download request (file loaded into cellular module) • 4: AssistNow Online data download request (data loaded into the GNSS receiver). This is only needed if AssistNow Online is not used with automatic operation • 8: AssistNow autonomous • Other values are reserved for future use

31.8.4 Notes

LARA-R211 / TOBY-R2

- The command is not supported by LARA-R211-02B-00, TOBY-R200-02B-00 and TOBY-R202-02B-00.

31.9 Send of UBX string +UGUBX

+UGUBX						
Modules	LARA-R202 LARA-R203 LARA-R211 LARA-R220 LARA-R280 TOBY-R2					
	SARA-U2 LISA-U200-01S LISA-U200-02S LISA-U200-03S LISA-U200-52S LISA-U200-62S LISA-U200-83S LISA-U201 LISA-U230 LISA-U260 LISA-U270 LISA-U1					
	SARA-G340 SARA-G350 SARA-G350-53S LEON-G1					
Attributes	**Syntax**	**PIN required**	**Settings saved**	**Can be aborted**	**Response time**	**Error reference**
	full	No	No	No	< 10 s	+CME Error

31.9.1 Description

Sends UBX protocol messages, embedded in an AT command, to a u-blox GNSS receiver. The command is transparent, that is the data is sent to the GNSS receiver without any check: it is up to the user to control if the UBX data is valid. The checksum in +UGUBX command string is ignored, this is calculated when the data is sent to the GNSS receiver.

When the GNSS is off the UBX string is saved in RAM and, later, passed to the GNSS as configuration for "GNSS data ready" function when the GNSS receiver is used. This message is used only if the GNSS receiver HW is unknown (newer than the cellular module FW). In this case the UBX checksum bytes must be filled correctly.

☞ It is recommended to not send UBX messages to reset the GNSS receiver while it is in use, this will cause a misalignment between the configuration of the cellular module and the one of the GNSS receiver. Furthermore it is recommended to not configure the GNSS power saving with the "GNSS data ready" active, because the GNSS receiver could send wrong reading requests to the cellular module.

31.9.2 Syntax

Type	Syntax	Response	Example
Set	AT+UGUBX=<UBX_string>	+UGUBX: <UBX_string_response> OK	AT+UGUBX="B56206010800010600010000000017DA" +UGUBX: "B5620501020006010F38" OK

31.9.3 Defined values

Parameter	Type	Description
<UBX_string>	String	UBX message in hexadecimal format. The messages can include spaces to simplify copy/paste from u-center separated with spaces, e.g. AT+UGUBX="B5 62 06 01 08 0 0 01 06 00 01 00 00 00 00 17 DA" (this is important when copying messages from u-center). For the limit of the length of the string, see Command line.
<UBX_string_response>	String	The response message depends by the request sent: query/poll UBX messages will return the requested data in hexadecimal format, while the configuration message will return the corresponding acknowledge or not-acknowledge. See the UBX protocol specification

31.9.4 Notes

- If a +UGUBX command triggers multiple strings answer only a single UBX string is returned. E. g. polling GPS Aiding Ephemeris Data (AID-EPH) is done by sending a single message to the receiver but returns 32 messages; only the first one is sent to AT interface.
- The answer can be split in multiple information text responses all starting with "+UGUBX:".

LARA-R211 / TOBY-R2

- The command is not supported by LARA-R211-02B-00, TOBY-R200-02B-00 and TOBY-R202-02B-00.

LISA-U2 / LISA-U1

- The command can only be used when the GNSS is used from the AT interface (power on by AT+UGPS=1,x).

LISA-U200-01S / LISA-U230 / LISA-U260-01S / LISA-U270-01S

- During hybrid positioning the command is used to configure "GNSS data ready" function.

LEON-G1

- The command can only be used when the GNSS is used from the AT interface (power on by AT+UGPS=1,x).

31.10 GNSS indications timer +UGTMR

+UGTMR						
Modules	LARA-R202 LARA-R203 LARA-R211 LARA-R220 LARA-R280 TOBY-R2					
	SARA-U2 LISA-U200-01S LISA-U200-02S LISA-U200-03S LISA-U200-52S LISA-U200-62S LISA-U200-83S LISA-U201 LISA-U230 LISA-U260 LISA-U270 LISA-U1					
	SARA-G340 SARA-G350 SARA-G350-53S LEON-G1					
Attributes	**Syntax**	**PIN required**	**Settings saved**	**Can be aborted**	**Response time**	**Error reference**
	full	No	No	No	< 10 s	+CME Error

31.10.1 Description

Sets the date and time format. With the <time_zone> parameter is possible to set the time zone value; the time and the date will be updated as the local time. With the action command is possible to synchronize the UTC timing.

31.10.2 Syntax

Type	Syntax	Response	Example
Set	AT+UGTMR=<time_zone>	OK	AT+UGTMR=-1 OK
Read	AT+UGTMR?	+UGTMR: <time_zone> OK	+UGTMR: -1 OK
Test	AT+UGTMR=?	+UGTMR: (list of supported <time_zone>s) OK	+UGTMR: (-96 - 96) OK

31.10.3 Defined values

Parameter	Type	Description
<time_zone>	Number	Indicates the time zone value set by the user; the module can provide an error result code if the offset has not been calculated. The factory-programmed time zone value is 0. • -96, 96: defined range

31.10.4 Notes

- The time zone is expressed in quarters of hour.
- The time is updated with the current UTC time plus the time zone and the time zone is unchanged, for example:

Command	Response	Remarks
AT+UGTMR=-36	OK	The command returns the "OK" final result code and sets the new date and time if the GNSS has this information, otherwise a generic error result code is returned.
AT+CCLK?	+CCLK: "12/05/23,21:54:21+00"	

LARA-R211 / TOBY-R2

- The command is not supported by LARA-R211-02B-00, TOBY-R200-02B-00 and TOBY-R202-02B-00.

LEON-G1

- The command returns the "OK" final result code in case the GNSS has no time information, but in this case the date and time are not updated.
- The time zone range goes from -48 to 48.

31.11 Get GNSS time and date +UGZDA

+UGZDA						
Modules	LARA-R202 LARA-R203 LARA-R211 LARA-R220 LARA-R280 TOBY-R2					
	SARA-U2 LISA-U200-01S LISA-U200-02S LISA-U200-03S LISA-U200-52S LISA-U200-62S LISA-U200-83S LISA-U201 LISA-U230 LISA-U260 LISA-U270 LISA-U1					
	SARA-G340 SARA-G350 SARA-G350-53S LEON-G1					
Attributes	**Syntax**	**PIN required**	**Settings saved**	**Can be aborted**	**Response time**	**Error reference**
	full	No	NVM	No	< 10 s	+CME Error

31.11.1 Description

Enables/disables the storing of the last value of NMEA $ZDA messages, and get the current messaging state. If the <state> parameter is enabled, the last value of NMEA $ZDA messages can be retrieved with the read command even when the GNSS is switched off.

The NMEA $ZDA messages are volatile.

31.11.2 Syntax

Type	Syntax	Response	Example
Set	AT+UGZDA=<state>	OK	AT+UGZDA=1 OK
Read	AT+UGZDA?	+UGZDA: <state>,<$ZDA msg> OK	+UGZDA: 1,$GPZDA,142351.00,12,12,2013,00,00*66 OK +UGZDA: 0,NULL OK
Test	AT+UGZDA=?	+UGZDA: (list of supported <state>s) OK	+UGZDA: (0-1) OK

31.11.3 Defined values

Parameter	Type	Description
<state>	Number	• 0 (factory-programmed value): disable the NMEA $ZDA messages • 1: enable the NMEA $ZDA messages
<$ZDA msg>	String	NMEA $ZDA messages or "Not available" if the NMEA string is enabled, but this information has not been still sent to the user.

31.11.4 Notes

LARA-R211 / TOBY-R2

- The command is not supported by LARA-R211-02B-00, TOBY-R200-02B-00 and TOBY-R202-02B-00.

31.12 Get GNSS fix data +UGGGA

+UGGGA						
Modules	LARA-R202 LARA-R203 LARA-R211 LARA-R220 LARA-R280 TOBY-R2					
	SARA-U2 LISA-U200-01S LISA-U200-02S LISA-U200-03S LISA-U200-52S LISA-U200-62S LISA-U200-83S LISA-U201 LISA-U230 LISA-U260 LISA-U270 LISA-U1					
	SARA-G340 SARA-G350 SARA-G350-53S LEON-G1					
Attributes	**Syntax**	**PIN required**	**Settings saved**	**Can be aborted**	**Response time**	**Error reference**
	full	No	NVM	No	< 10 s	+CME Error

31.12.1 Description

Enables/disables the storing of the last value of NMEA $GGA messages, and gets the current messaging state. If the <state> parameter is enabled, the last value of NMEA $GGA messages can be retrieved with the read command even when the GNSS is switched off.

The NMEA $GGA messages are volatile.

31.12.2 Syntax

Type	Syntax	Response	Example
Set	AT+UGGGA=<state>	OK	AT+UGGGA=1 OK
Read	AT+UGGGA?	+UGGGA: <state>,<$GGA msg> OK	+UGGGA: 1,$GPGGA,142351.00,,,,,0,00,99.99,,,,,,*66 OK +UGGGA: 0,NULL OK
Test	AT+UGGGA=?	+UGGGA: (list of supported <state>s) OK	+UGGGA: (0-1) OK

31.12.3 Defined values

Parameter	Type	Description
<state>	Number	• 0 (factory-programmed value): to disable the NMEA $GGA messages • 1: to enable the NMEA $GGA messages
<$GGA msg>	String	NMEA $GGA messages or "Not available" if the NMEA string is enabled, but this information has not been still sent to the user.

31.12.4 Notes

LARA-R211 / TOBY-R2

- The command is not supported by LARA-R211-02B-00, TOBY-R200-02B-00 and TOBY-R202-02B-00.

31.13 Get geographic position +UGGLL

+UGGLL						
Modules	LARA-R202 LARA-R203 LARA-R211 LARA-R220 LARA-R280 TOBY-R2					
	SARA-U2 LISA-U200-01S LISA-U200-02S LISA-U200-03S LISA-U200-52S LISA-U200-62S LISA-U200-83S LISA-U201 LISA-U230 LISA-U260 LISA-U270 LISA-U1					
	SARA-G340 SARA-G350 SARA-G350-53S LEON-G1					
Attributes	**Syntax**	**PIN required**	**Settings saved**	**Can be aborted**	**Response time**	**Error reference**
	full	No	NVM	No	< 10 s	+CME Error

31.13.1 Description

Enables/disables the storing of the last value of NMEA $GLL messages, and gets the current messaging state. If the <state> parameter is enabled, the last value of NMEA $GLL messages can be retrieved with the read command even when the GNSS is switched off.

The NMEA $GLL messages are volatile.

31.13.2 Syntax

Type	Syntax	Response	Example
Set	AT+UGGLL=<state>	OK	AT+UGGLL=1 OK
Read	AT+UGGLL?	+UGGLL: <state>,<$GLL msg> OK	+UGGLL: 1,$GPGLL,,,,,142351.00,V,N*4A OK +UGGLL: 0,NULL OK
Test	AT+UGGLL=?	+UGGLL: (list of supported <state>s)	+UGGLL: (0-1)

Type	Syntax	Response	Example
		OK	OK

31.13.3 Defined values

Parameter	Type	Description
<state>	Number	• 0 (factory-programmed value): to disable the NMEA $GLL messages • 1: to enable the NMEA $GLL messages
<$GLL msg>	String	NMEA $GLL messages or "Not available" if the NMEA string is enabled, but this information has not been still sent to the user.

31.13.4 Notes

LARA-R211 / TOBY-R2

- The command is not supported by LARA-R211-02B-00, TOBY-R200-02B-00 and TOBY-R202-02B-00.

31.14 Get number of GNSS satellites in view +UGGSV

+UGGSV						
Modules	LARA-R202 LARA-R203 LARA-R211 LARA-R220 LARA-R280 TOBY-R2					
	SARA-U2 LISA-U200-01S LISA-U200-02S LISA-U200-03S LISA-U200-52S LISA-U200-62S LISA-U200-83S LISA-U201 LISA-U230 LISA-U260 LISA-U270 LISA-U1					
	SARA-G340 SARA-G350 SARA-G350-53S LEON-G1					
Attributes	**Syntax**	**PIN required**	**Settings saved**	**Can be aborted**	**Response time**	**Error reference**
	full	No	NVM	No	< 10 s	+CME Error

31.14.1 Description

Enable/disables the storing of the last value of NMEA $GSV messages, and gets the current messaging state. If the <state> parameter is enabled, the last value of NMEA $GSV messages can be retrieved with the read command even when the GNSS is switched off.

The NMEA $GSV messages are volatile.

31.14.2 Syntax

Type	Syntax	Response	Example
Set	AT+UGGSV=<state>	OK	AT+UGGSV=1 OK
Read	AT+UGGSV?	+UGGSV: <state>,<$GSV msg> OK	+UGGSV: 1,$GPGSV,3,1,11,03,67,298,22,06,88,149,29,07,06,302,,08,05,332,25*73 $GPGSV,3,2,11,09,02,334,25,14,02,141,,15,10,041,43,16,46,209,16*7D $GPGSV,3,3,11,18,48,066,35,21,26,070,35,27,80,314,25*40 $GLGSV,1,1,03,73,13,248,,74,23,298,20,75,09,348,19*51 OK +UGGSV: 0,NULL OK
Test	AT+UGGSV=?	+UGGSV: (list of supported <state>s) OK	+UGGSV: (0-1) OK

31.14.3 Defined values

Parameter	Type	Description
<state>	Number	• 0 (factory-programmed value): to disable the NMEA $GSV messages

Parameter	Type	Description
		• 1: to enable the NMEA $GSV messages
<$GSV msg>	String	NMEA $GSV messages or "Not available" if the NMEA string is enabled, but this information has not been still sent to the user.

31.14.4 Notes

- Since the $GSV message reports satellite information, the output of the different GNSS systems is not combined, but it is reported in sequence as in the example above with GPS and GLONASS.

LARA-R211 / TOBY-R2

- The command is not supported by LARA-R211-02B-00, TOBY-R200-02B-00 and TOBY-R202-02B-00.

31.15 Get recommended minimum GNSS data +UGRMC

+UGRMC						
Modules	LARA-R202 LARA-R203 LARA-R211 LARA-R220 LARA-R280 TOBY-R2					
	SARA-U2 LISA-U200-01S LISA-U200-02S LISA-U200-03S LISA-U200-52S LISA-U200-62S LISA-U200-83S LISA-U201 LISA-U230 LISA-U260 LISA-U270 LISA-U1					
	SARA-G340 SARA-G350 SARA-G350-53S LEON-G1					
Attributes	**Syntax**	**PIN required**	**Settings saved**	**Can be aborted**	**Response time**	**Error reference**
	full	No	NVM	No	< 10 s	+CME Error

31.15.1 Description

Enable/disables the storing of the last value of NMEA $RMC messages, and gets the current messaging state. If the <state> parameter is enabled, the last value of NMEA $RMC messages can be retrieved with the read command even when the GNSS is switched off.

The NMEA $RMC messages are volatile.

31.15.2 Syntax

Type	Syntax	Response	Example
Set	AT+UGRMC=<state>	OK	AT+UGRMC=1 OK
Read	AT+UGRMC?	+UGRMC: <state>,<$RMC msg> OK	+UGRMC: 1,$GPRMC,142351.00,V,,,,,,,121213,,,N*7F OK +UGRMC: 0,NULL OK
Test	AT+UGRMC=?	+UGRMC: (list of supported <state>s) OK	+UGRMC: (0-1) OK

31.15.3 Defined values

Parameter	Type	Description
<state>	Number	• 0 (factory-programmed value): to disable the NMEA $RMC messages • 1: to enable the NMEA $RMC messages
<$RMC msg>	String	NMEA $RMC messages or "Not available" if the NMEA string is enabled, but this information has not been still sent to the user.

31.15.4 Notes

LARA-R211 / TOBY-R2

- The command is not supported by LARA-R211-02B-00, TOBY-R200-02B-00 and TOBY-R202-02B-00.

31.16 Get course over ground and ground speed +UGVTG

+UGVTG						
Modules	LARA-R202 LARA-R203 LARA-R211 LARA-R220 LARA-R280 TOBY-R2					
	SARA-U2 LISA-U200-01S LISA-U200-02S LISA-U200-03S LISA-U200-52S LISA-U200-62S LISA-U200-83S LISA-U201 LISA-U230 LISA-U260 LISA-U270 LISA-U1					
	SARA-G340 SARA-G350 SARA-G350-53S LEON-G1					
Attributes	**Syntax**	**PIN required**	**Settings saved**	**Can be aborted**	**Response time**	**Error reference**
	full	No	NVM	No	< 10 s	+CME Error

31.16.1 Description

Enables/disables the storing of the last value of NMEA $VTG messages, and gets know the current messaging state. If the <state> parameter is enabled, the last value of NMEA $VTG messages can be retrieved with the read command even when the GNSS is switched off.

The NMEA $VTG messages are volatile.

31.16.2 Syntax

Type	Syntax	Response	Example
Set	AT+UGVTG=<state>	OK	AT+UGVTG=1 OK
Read	AT+UGVTG?	+UGVTG: <state>,<$VTG msg> OK	+UGVTG: 1,$GPVTG,,,,,,,,,N*30 OK +UGVTG: 0,NULL OK
Test	AT+UGVTG=?	+UGVTG: (list of supported <state>s) OK	+UGVTG: (0-1) OK

31.16.3 Defined values

Parameter	Type	Description
<state>	Number	• 0 (factory-programmed value): to disable the NMEA $VTG messages • 1: to enable the NMEA $VTG messages
<$VTG msg>	String	NMEA $VTG messages or "Not available" if the NMEA string is enabled, but this information has not been still sent to the user.

31.16.4 Notes

LARA-R211 / TOBY-R2

- The command is not supported by LARA-R211-02B-00, TOBY-R200-02B-00 and TOBY-R202-02B-00.

31.17 Get satellite information +UGGSA

+UGGSA						
Modules	LARA-R202 LARA-R203 LARA-R211 LARA-R220 LARA-R280 TOBY-R2					
	SARA-U2 LISA-U200-01S LISA-U200-02S LISA-U200-03S LISA-U200-52S LISA-U200-62S LISA-U200-83S LISA-U201 LISA-U230 LISA-U260 LISA-U270 LISA-U1					
	SARA-G340 SARA-G350 SARA-G350-53S LEON-G1					
Attributes	**Syntax**	**PIN required**	**Settings saved**	**Can be aborted**	**Response time**	**Error reference**
	full	No	NVM	No	< 10 s	+CME Error

31.17.1 Description

Enables/disables the storing of the last value of NMEA $GSA messages, and gets the current messaging state. If <state> parameter is enabled, the last value of NMEA $GSA messages can be retrieved with the read command even when the GNSS is switched off.

The NMEA $GSA messages are volatile.

31.17.2 Syntax

Type	Syntax	Response	Example
Set	AT+UGGSA=<state>	OK	AT+UGGSA=1 OK
Read	AT+UGGSA?	+UGGSA: <state>,<$GSA msg> OK	+UGGSA: 1,$GPGSA,A,1,,,,,,,,,,,,99.99,99.99,99.99*30 OK +UGGSA: 0,NULL OK
Test	AT+UGGSA=?	+UGGSA: (list of supported <state>s) OK	+UGGSA: (0-1) OK

31.17.3 Defined values

Parameter	Type	Description
<state>	Number	• 0 (factory-programmed value): to disable the NMEA $GSA messages • 1: to enable the NMEA $GSA messages
<$GSA msg>	String	NMEA $GSA messages or "Not available" if the NMEA string is enabled, but this information has not been still sent to the user.

31.17.4 Notes

LARA-R211 / TOBY-R2

- The command is not supported by LARA-R211-02B-00, TOBY-R200-02B-00 and TOBY-R202-02B-00.

31.18 Ask for localization information +ULOC

+ULOC						
Modules	LARA-R202 LARA-R203 LARA-R211 LARA-R220 LARA-R280 TOBY-R2					
	SARA-U2 LISA-U200-01S LISA-U200-02S LISA-U200-03S LISA-U200-52S LISA-U200-62S LISA-U200-83S LISA-U201 LISA-U230 LISA-U260 LISA-U270 LISA-U1					
	SARA-G340 SARA-G350 SARA-G350-53S LEON-G1					
Attributes	**Syntax**	**PIN required**	**Settings saved**	**Can be aborted**	**Response time**	**Error reference**
	full	No	No	No	< 10 s	+CME Error

31.18.1 Description

Requests cellular module to provide the location data; the location can be determined using:

- GNSS receiver
- CellLocate® (location based on network cells data)
- Combination of both technologies (hybrid)

The final result code indicates if sending the command request to the localization information process was successful or not. The URC is issued to provide the requested information via +ULOC set command.

The GNSS interface and CellLocate® can be used at the same time: if the GNSS sensor is reserved to another interface an error result code is provided ("+CME ERROR: GPS busy" if +CMEE=2).

It is possible to configure the Hybrid Positioning through +ULOCGNSS and +ULOCCELL AT commands even if it is running: the parameters are stored in NVM and will be applied at the next +ULOC command.

☞ If the +ULOC command is sent while a previous +ULOC activity is still in progress the previous activity is aborted, the available position is immediately output and the next +ULOC request is served.

☞ The data connection cannot be immediately dropped at the +ULOC timeout expiration. This could lead to a delay in the expected response time.

- Depending on the aiding chosen, a data connection could be required; see the AT+UGPS command description.
- If no position is available (no GNSS coverage, no network information and no previous data available) then the <lat> latitude and <long> longitude will be set to '0'.
- If the previous position degradated by the elapsed time satisfies the desired accuracy then the sensor '0' is reported in the information text response.
- If multi-hypothesis is required the GNSS solution and the CellLocate® solutions are reported, if available. If no GNSS or CellLocate® solutions are present, the previous position degradated is used instead.
- If multi-hypothesis is required but the sensor is set to GNSS (<sensor>=1), only one solution will be provided: the GNSS one (or the previous position degradated if GNSS solution not available).
- If a valid GNSS fix with an accuracy below the required value (<accuracy>) occurs before the end of the network scan, the GNSS-only solution will be available, even if multi-hypothesis has been required.

31.18.2 Syntax

Type	Syntax	Response	Example
Set	AT+ULOC=<mode>,<sensor>,<response_type>,<timeout>,<accuracy>[,<num_hypothesis>]	OK	AT+ULOC=2,3,0,120,1 OK
Read	AT+ULOC?	+ULOC: <mode>,<sensor>,<response_type>,<timeout>,<accuracy>,<num_hypotesis> OK	+ULOC: 2,3,1,0,20,0 OK
Test	AT+ULOC=?	+ULOC: (list of supported <mode>s),(list of supported <sensor>s),(list of supported <response_type>s),(list of supported <timeout>s),(list of supported <accuracy>s),(list of supported <num_hypotesis>s) OK	+ULOC: (0-2),(0-3),(0-2),(1-999),(1-999999),(1-16) OK
URC		If <response_type>=0: +UULOC: <date>,<time>,<lat>,<long>,<alt>,<uncertainty>	+UULOC: 13/04/2011,09:54:51.000,45.6334520,13.0618620,49,1
		If <response_type>=1: +UULOC: <date>,<time>,<lat>,<long>,<alt>,<uncertainty>,<speed>,<direction>,<vertical_acc>,<sensor_used>,<SV_used>,<antenna_status>,<jamming_status>	+UULOC: 25/09/2013,10:13:29.000,45.7140971,13.7409172,266,17,0,0,18,1,6,3,9
		If <response_type>=2, <sensor_used>= 1 and <num_hypothesis>=N: +UULOC: <sol>,<num>,<sensor_used>,<date>,<time>,<lat>,<long>,<alt>,<uncertainty>,<speed>,<direction>,<vertical_acc>,<SV_used>,<antenna_status>,<jamming_status>	+UULOC: 1,2,1,08/04/2015,09:02:32.000,45.7141652,13.7410666,266,47,0,0,40,3,0,0
		If <response_type>=2, <sensor_used> = 2 and <num_hypothesis>= N: +UULOC: <sol>,<num>,<sensor_used>,<date>,<time>,<lat>,<long>,<alt>,<lat50>,<long50>,<major50>,<minor50>,<orientation50>,<confidence50>[,<lat95>,<long95>,<major95>,<minor95>,<orientation95>,<confidence95>]	+UULOC: 2,2,2,08/04/2015,09:02:19.000,45.7140665,13.7411681,0,45.7240260,13.7511276,113,10,0,50,45.7240260,13.7511276,143,41,0,95

Type	Syntax	Response	Example
		If <response_type>=2, <sensor_used>= 0: +UULOC: <sol>,<num>,<sensor_used>,<date>,<time>,<lat>,<long>,<alt>,<uncertainty>	+UULOC: 1,1,0,08/04/2015,09:03:45.000,45.7140290,13.7410695,0,32

31.18.3 Defined values

Parameter	Type	Description
<mode>	Number	• 0: reserved • 1: reserved • 2: single shot position
<sensor>	Number	Sensor selection: it is possible to combine different sensors summing <sensor> values of the selected sensors: • 0: use the last fix in the internal database and stop the GNSS receiver • 1: use the GNSS receiver for localization • 2: use CellLocate® location information
<response_type>	Number	Type of response: • 0: standard (single-hypothesis) response • 1: detailed (single-hypothesis) response • 2: multi-hypotheses response
<timeout>	Number	Timeout period in seconds (1 - 999)
<accuracy>	Number	Target accuracy in meters (1 - 999999)
<num_hypothesis>	Number	Maximum desired number of responses from CellLocate® (up to 16): multiple positions followed by their ellipsoidal uncertainties. This value has to be increased by 1 (GNSS solution) to get the maximum number of possible solutions. This optional parameter can be used only if <response_type>=2. The default value is 1.
<date>	String	GPS date[7] (DD/MM/YY) of the estimated position
<time>	String	GPS time[7] (hh:mm:ss.sss) of the estimated position
<lat>	String	Estimated latitude, in degrees
<long>	String	Estimated longitude, in degrees
<alt>	Number	Estimated altitude, in meters[8]
<uncertainty>	Number	Maximum possible error, in meters (0 - 20000000)
<speed>	Number	Speed over ground m/s[8]
<direction>	Number	Course over ground in degree (0 deg - 360 deg)[(8)]
<vertical_acc>	Number	Vertical accuracy, in meters[8]
<sensor_used>	Number	Sensor used for the position calculation
<SV_used>	Number	Number of satellite used to calculate the position[8]
<sol>	Number	Solution index (between 1 and <num>)
<num>	Number	Total number of the available hypotheses (less than or equal to <num_hypothesis>)
<lat50>/<lat95>	String	Estimated latitude (50/95% confidence levels), in degrees
<long50>/<long95>	String	Estimated longitude (50/95% confidence levels), in degrees
<major50>/<major95>	Number	Semi-major axis of the ellipse (50/95% confidence levels), in meters
<minor50>/<minor95>	Number	Semi-minor axis of the ellipse (50/95% confidence levels), in meters
<orientation50>/<orientation95>	Number	Orientation of the ellipse (50/95% confidence levels), in degrees
<confidence50>/<confidence95>	Number	50/95% confidence levels, in percentage
<antenna_status>	Number	Antenna status (0 - 4)[(8)]. For more details see the u-blox GNSS receiver protocol specification
<jamming_status>	Number	Jamming status[8]. For more details see the u-blox GNSS receiver protocol specification

[7] Coming either from the CellLocate® server or the GNSS receiver (GPS time)
[8] only for GNSS positioning, 0 in case of CellLocate®

31.18.4 Notes

- If AssistNow Online aiding data has been configured by means of the <aiding> parameter of +ULOCGNSS AT command, the +ULOC request using <sensor>=1 (GNSS receiver only) can provide a +UULOC URC reporting a CellLocate solution (<sensor_used>=2). This can happen if:
  - a GNSS fix is not available.
  - the CellLocate solution is more accurate (i.e. CellLocate solution's uncertainty is better than the GNSS's one).
- The <jamming_status> value must be ignored if the jamming is disabled through +ULOCGNSS command.
- The <date>, <time>, <lat>, <long> values are not enclosed in double quotes in the URC.

LARA-R211 / TOBY-R2

- The command is not supported by LARA-R211-02B-00, TOBY-R200-02B-00 and TOBY-R202-02B-00.

SARA-U260-00S / SARA-U270-00S / SARA-U270-00X / SARA-U280-00S / LISA-U200-00S / LISA-U200-01S / LISA-U200-02S / LISA-U200-52S / LISA-U200-62S / LISA-U230 / LISA-U260 / LISA-U270 / LISA-U1 / SARA-G3

- The <num_hypothesis> parameter is not supported.

LEON-G1

- The GNSS receiver is not stopped if the <sensor> is set to 0.
- The GNSS interface and CellLocate® are mutually exclusive; if a +ULOC request is sent when the GNSS is already started with +UGPS the command will return an error result code ("+CME ERROR: Invalid operation with GPS ON" if +CMEE is set to 2) and vice versa ("+CME ERROR: Invalid operation with LOC running" if +CMEE is set to 2). When the +ULOC command has been triggered also +UGAOP, +UGAOF, +UGAOS, +UGUBX AT commands will report an error result code, but it is possible to query NMEA strings.
- An error result code will be provided if the hybrid configuration is performed when the hybrid positioning is running.
- The cellular module date and time is not used in the answer, so if no sensor is available these fields are filled with '0'.
- The <num_hypothesis> parameter is not supported.

31.19 Ask for time information +UTIME

+UTIME						
Modules	SARA-U201-04A SARA-U201-04B SARA-U201-04X SARA-U270-04B					
Attributes	**Syntax**	**PIN required**	**Settings saved**	**Can be aborted**	**Response time**	**Error reference**
	full	No	No	No	< 10 s	+CME Error

31.19.1 Description

Requests the cellular module to provide time information; the time can be determined using:

- Local RTC
- GNSS receiver
- CellLocate® (location based on network cells data)
- Combination of GNSS receiver and CellLocate® (hybrid)

The final result code indicates if sending the command request was successful or not. The URC is issued to provide the requested information via the +UTIME set command.

Time information is also provided as a time pulse from a GPIO pin (to be configured as output via +UGPIOC).

The GNSS interface and CellLocate® can be used at the same time: if the GNSS sensor is reserved for another interface, an error result code is provided ("+CME ERROR: GPS busy" if +CMEE=2).

31.19.2 Syntax

Type	Syntax	Response	Example
Set	AT+UTIME=<mode>,<sensor>[,<latency>]	OK	AT+UTIME=2,3 OK
Read	AT+UTIME?	+UTIME: <mode>,<sensor>,<latency>	+UTIME: 2,3,1000

Type	Syntax	Response	Example
		OK	OK
Test	AT+UTIME=?	+UTIME: (list of supported <mode>s),(list of supported <sensor>s),(range of supported <latency>) OK	+UTIME: (0-2),(0-3),(1-60000) OK
URC		+UUTIME: <date>,<time>, <milliseconds>,<accuracy>, <source>	**If <source>=1:** +UUTIME: 13/04/2011,09:54:51, 123.456789,0.000083000,1
			If <source>=2: +UUTIME: 13/04/2011,09:54:51, 123.456789,1.500000000,2
			If <source>=1 and 2 available: +UUTIME: 13/04/2011,09:54:51, 123.456789,1.500000000,2 +UUTIME: 13/04/2011,09:54:52, 234.567891,0.000083000,1

31.19.3 Defined values

Parameter	Type	Description
<mode>	Number	• 0: reserved • 1: reserved • 2: single shot position
<sensor>	Number	Sensor selection: it is possible to combine different sensors summing <sensor> values of the selected sensors: • 0: use the local RTC propagated time • 1: use the GNSS receiver for timing • 2: use CellLocate® service information • 3: use the combined GNSS receiver and CellLocate® service information for timing
<latency>	Number	Network latency in milliseconds (1 - 60000). The default value is 1000.
<date>	String	Date[9] (DD/MM/YY) of the estimated position
<time>	String	Time[9] (hh:mm:ss) of the day
<milliseconds>	Number	Fractional part of the time information, in milliseconds
<accuracy>	Number	Accuracy of the time information, in seconds
<source>	Number	Sensor used: • 0: local RTC propagated time • 1: GNSS receiver • 2: CellLocate® service information

31.19.4 Notes

- The <date>, <time> values are not enclosed in double quotes in the URC.

SARA-U2

- Configure GPIO1 (pin number 16) as output pin to provide the time information as a time pulse on GPIO pin.

[9] Time information from GNSS can be expressed in GPS time or UTC time depending on the GNSS version:
- u-blox 6: GPS time
- u-blox 7: UTC time/GPS time (depending on the configured time base via +UGUBX)
- u-blox M8: UTC time

Time information from CellLocate® server is expressed in UTC time.

31.20 Localization information request status unsolicited indication +ULOCIND

+ULOCIND						
Modules	LARA-R202 LARA-R203 LARA-R211 LARA-R220 LARA-R280 TOBY-R2					
	SARA-U201 SARA-U260-03S SARA-U270-03A SARA-U270-03S SARA-U270-04B SARA-U270-53S SARA-U270-73S SARA-U280-03S LISA-U200-03S LISA-U200-83S LISA-U201					
	SARA-G340-02S SARA-G340-02X SARA-G350-02A SARA-G350-02S SARA-G350-02X SARA-G350-53S					
Attributes	**Syntax**	**PIN required**	**Settings saved**	**Can be aborted**	**Response time**	**Error reference**
	full	No	No	No	-	+CME Error

31.20.1 Description

Configures sending of URCs from MT to TE in the case of +ULOC operations. The URC provides the result of the steps of an +ULOC operation.

31.20.2 Syntax

Type	Syntax	Response	Example
Set	AT+ULOCIND=<mode>	OK	AT+ULOCIND=1 OK
Read	AT+ULOCIND?	+ULOCIND: <mode> OK	+ULOCIND: 1 OK
Test	AT+ULOCIND=?	+ULOCIND: (list of supported <mode>'s) OK	+ULOCIND: (0-1) OK
URC		+UULOCIND: <step>,<result> OK	+UULOCIND: 1,0 OK

31.20.3 Defined values

Parameter	Type	Description
<mode>	Number	URC configuration: • 0 (default value): disabled • 1: enabled
<step>	Number	Informs the user about the operation in progress: • 0: network scan start • 1: network scan end • 2: requesting data to the server • 3: received data from the server • 4: sending feedback to the server
<result>	Number	Represents the result of the aiding operation: • 0: no error • 1: wrong URL • 2: HTTP error • 3: create socket error • 4: close socket error • 5: write to socket error • 6: read from socket error • 7: connection/DNS error • 8: authentication token missing or wrong (required for aiding for u-blox M8 and future versions) • 9: generic error • 10: user terminated • 11: no data from server

31.20.4 Notes

LARA-R211 / TOBY-R2

- The command is not supported by LARA-R211-02B-00, TOBY-R200-02B-00 and TOBY-R202-02B-00.

31.21 Specify the device autonomous solution +ULOCAID

+ULOCAID						
Modules	LARA-R202 LARA-R203 LARA-R211 LARA-R220 LARA-R280 TOBY-R2					
	SARA-U201 SARA-U260-03S SARA-U270-03A SARA-U270-03S SARA-U270-04B SARA-U270-53S SARA-U270-73S SARA-U280-03S LISA-U200-03S LISA-U200-83S LISA-U201					
	SARA-G340-02S SARA-G340-02X SARA-G350-02A SARA-G350-02S SARA-G350-02X SARA-G350-53S					
Attributes	**Syntax**	**PIN required**	**Settings saved**	**Can be aborted**	**Response time**	**Error reference**
	full	No	No	No	-	+CME Error

31.21.1 Description

The user has the possibility to specify its state (position and velocity) at a given time to select one of the multi-hypothesis provided in the previous +ULOC request (<sol> parameter) or to insert a location estimate provided by other sensors. These information will be sent to the server with the next +ULOC command.

☞ This command influences the amount of data exchanged with the server.

☞ If the parameters of the autonomous solution have to be specified (<index> = 0), the RTC time must have a correct value prior to using the +ULOCAID command.

☞ Speed and direction parameters can be inserted (optionally) also if one of the multi-hypotheses has been selected (<index> > 0). Default values are those contained in the hypothesis selected (equal to 0 for CellLocate® solutions).

31.21.2 Syntax

Type	Syntax	Response	Example
Location estimate from other sensors			
Set	AT+ULOCAID=0,<date>,<time>,<lat>,<long>,<major>,<minor>,<orientation>[,<speed>,<direction>]	OK	AT+ULOCAID=0,"10/03/2015","11:37:32.000","45.23456","11.12345",1300,789,34,34,121 OK
Read	AT+ULOCAID?	+ULOCAID: <index>,<date>,<time>,<lat>,<long>,<major>,<minor>,<orientation>[,<speed>,<direction>] OK	If <speed> and <direction> set: +ULOCAID: 0,"10/03/2015","11:37:32.000","45.23456","11.12345",1300,789,34,34,121 OK
			If <speed> and <direction> unknown: +ULOCAID: 0,"10/03/2015","11:37:32.000","45.23456","11.12345",1300,789,34 OK
Location estimate from hypothesis selected (<index> greater than 0)			
Set	AT+ULOCAID=<index>[,,,,,,,,<speed>,<direction>]	OK	If <speed> and <direction> unknown: AT+ULOCAID=1 OK
			If <speed> and <direction> set: AT+ULOCAID=1,,,,,,,,34,121 OK
Read	AT+ULOCAID?	+ULOCAID: <index>,<date>,<time>,<lat>,<long>,<major>,<minor>,<orientation>[,<speed>,<direction>]	If <speed> and <direction> unknown:

Type	Syntax	Response	Example
		OK	+ULOCAID: 1,"0/0/0","0:0:0.000","0.0000000","0.0000000",0,0,0 OK
			If <speed> and <direction> set: +ULOCAID: 1,"0/0/0","0:0:0.000","0.0000000","0.0000000",0,34,121 OK
Test	AT+ULOCAID=?	+ULOCAID: (list of supported <index>s),(list of supported <date>s),(list of supported <time>),(list of supported <lat>),(list of supported <long>),(list of supported <major>),(list of supported <minor>),(list of supported <orientation>),(list of supported <speed>s),(list of supported <direction>s) OK	+ULOCAID: (0-17),"","","","",(0-6300000),(0-6300000),(0-179),(0-255),(0-359) OK

31.21.3 Defined values

Parameter	Type	Description
<index>	Number	Multi-hypotesis index: • 0: location estimate from other sensors (following fields are used) • n: index of the previous CellLocate solution
<date>	String	Date (DD/MM/YY) of the estimated position.
<time>	String	Time (hh:mm:ss.sss) of the estimated position.
<lat>	String	Estimated latitude expressed in degrees.
<long>	String	Estimated longitude expressed in degrees.
<major>	Number	Semi-major axis of the uncertainty ellipse in meters.
<minor>	Number	Semi-minor axis of the uncertainty ellipse in meters.
<orientation>	Number	Orientation of the semi-major axis of the ellipse in degrees.
<speed>	Number	Estimated speed in meters per second. Default value is 0.
<direction>	Number	Direction of the motion in degrees. Default value is 0.

31.21.4 Notes

LARA-R211 / TOBY-R2

- The command is not supported by LARA-R211-02B-00, TOBY-R200-02B-00 and TOBY-R202-02B-00.

31.22 GNSS sensor configuration +ULOCGNSS

+ULOCGNSS						
Modules	LARA-R202 LARA-R203 LARA-R211 LARA-R220 LARA-R280 TOBY-R2					
	SARA-U2 LISA-U200-01S LISA-U200-02S LISA-U200-03S LISA-U200-52S LISA-U200-62S LISA-U200-83S LISA-U201 LISA-U230 LISA-U260 LISA-U270 LISA-U1					
	SARA-G340 SARA-G350 SARA-G350-53S LEON-G1					
Attributes	**Syntax**	**PIN required**	**Settings saved**	**Can be aborted**	**Response time**	**Error reference**
	full	No	NVM	No	-	+CME Error

31.22.1 Description

Configures the GNSS sensor used with the +ULOC command.

31.22.2 Syntax

Type	Syntax	Response	Example
Set	AT+ULOCGNSS=<aiding>[,<psv_mode>[,<minSV>[,<minCNO>[,	OK	AT+ULOCGNSS=15

Type	Syntax	Response	Example
	<ini_3d_fix>[,<staticHoldMode>[,<SBAS>[,<jamming>[,<antenna>[,<BBthreshold>[,<CWthreshold>[,<GNSS_system>[,<reserved1>[,<reserved2>]]]]]]]]]]]]		OK
Read	AT+ULOCGNSS?	+ULOCGNSS: <aiding>,<psv_mode>,<minSV>,<minCNO>,<ini_3d_fix>,<staticHoldMode>,<SBAS>,<jamming>,<antenna>,<BBthreshold>,<CWthreshold>,<GNSS_system>,<reserved1>,<reserved2> OK	+ULOCGNSS: 15,1,6,8,0,1,1,1,1,1,1,0,0,0 OK
Test	AT+ULOCGNSS=?	+ULOCGNSS: (list of supported <aiding>),(list of supported <psv_mode>),(list of supported <minSV>),(list of supported <minCNO>),(list of supported <ini_3d_fix>),(list of supported <staticHoldMode>),(list of supported <SBAS>),(list of supported <jamming>),(list of supported <antenna>),(list of supported <BBthreshold>),(list of supported <CWthreshold>),(list of supported <GNSS_system>),(0),(0) OK	+ULOCGNSS: (0-15),(0-1),(3-32),(0-50),(0-1),(0-255),(0-1),(0-1),(0-2),(0-15),(0-31),(1-127),(0),(0) OK

31.22.3 Defined values

Parameter	Type	Description
<aiding>	Number	GNSS aiding mode configuration; it is possible the combination of different aiding modes: to enable more aiding modes it is needed to sum the <mode> value of the interested aiding modes: • 1: local aiding (including RTC sharing) • 2: AssistNow Offline • 4: AssistNow Online • 8: AssistNow Autonomous All the modes (15) are enabled as a factory programmed setting.
<psv_mode>	Number	Power Save Mode (UBX-CFG-PM2): • 0 (factory-programmed value): disabled • 1: enabled
<minSV>	Number	• Minimum number of satellites for navigation (UBX-CFG-NAVX5). The range goes from 3 to 32. (factory-programmed value: 3)
<minCNO>	Number	• Minimum satellite signal level for navigation (UBX-CFG-NAVX5). The range goes from 0 to 50. (factory-programmed value: 7)
<ini_3d_fix>	Number	Initial Fix must be 3D flag (UBX-CFG-NAVX5): • 0 (factory-programmed value): disabled • 1: enabled
<staticHoldMode>	Number	Static Hold Mode (UBX-CFG-NAV5). The range goes from 0 to 255 cm/s. (factory-programmed value: 0). If the parameter is omitted, the Static Hold Mode threshold will not be configured to GNSS.
<SBAS>	Number	SBAS configuration: • 0 (factory-programmed value): disabled • 1: enabled
<jamming>	Number	Jamming indicator (UBX-CFG-ITFM): • 0 (factory-programmed value): disabled • 1: enabled
<antenna>	Number	Antenna setting: • 0 (factory-programmed value): unknown

Parameter	Type	Description
		• 1: passive • 2: active
<BBthreshold>	Number	Broadband jamming detection threshold (dB) (UBX-CFG- ITFM). The range goes from 0 to 15. (factory-programmed value: 0)
<CWthreshold>	Number	Continuous wave jamming detection threshold (dB) (UBX-CFG- ITFM). The range goes from 0 to 31. (factory-programmed value: 0)
<GNSS_systems>	Number	Supported GNSS types; the parameter is optional, the allowed values can be combined together: • 1 (factory-programmed value): GPS • 2: SBAS • 4: Galileo • 8: BeiDou • 16: IMES • 32: QZSS • 64: GLONASS
<Reserved1>	Number	0 (reserved value)
<Reserved2>	Number	0 (reserved value)

31.22.4 Notes

- To enable SBAS system opportunely configure both <SBAS> and <GNSS_systems> parameters.
- If a parameter is omitted, the current set value is kept.
- For more details on parameter description see the corresponding u-blox-GNSS receiver description.

LARA-R211 / TOBY-R2

- The command is not supported by LARA-R211-02B-00, TOBY-R200-02B-00 and TOBY-R202-02B-00.

LISA-U2 / LISA-U1 / SARA-G300 / SARA-G310 / SARA-G340-00S / SARA-G350-00S / SARA-G350-00X / LEON-G1

- The <GNSS_systems> parameter can only assume the value 0 (factory-programmed value).

31.23 Configure cellular location sensor (CellLocate®) +ULOCCELL

+ULOCCELL						
Modules	LARA-R202 LARA-R203 LARA-R211 LARA-R220 LARA-R280 TOBY-R2					
	SARA-U2 LISA-U200-01S LISA-U200-02S LISA-U200-03S LISA-U200-52S LISA-U200-62S LISA-U200-83S LISA-U201 LISA-U230 LISA-U260 LISA-U270 LISA-U1					
	SARA-G340 SARA-G350 SARA-G350-53S LEON-G1					
Attributes	**Syntax**	**PIN required**	**Settings saved**	**Can be aborted**	**Response time**	**Error reference**
	full	No	NVM	No	-	+CME Error

31.23.1 Description

Configures the Cellular location sensor (CellLocate®) used with the +ULOC command.

☞ This command influences the amount of data exchanged with the server.

31.23.2 Syntax

Type	Syntax	Response	Example
Set	AT+ULOCCELL=<scan_mode>[,<reserved1>[,<reserved2>[,<reserved3>[,<reserved4>[,<reserved5>]]]]]	OK	AT+ULOCCELL=0 OK
Read	AT+ULOCCELL?	+ULOCCELL: <scan_mode>,<reserved1>,<reserved2>,<reserved3>,<reserved4>,<reserved5> OK	+ULOCCELL: 0,0,"","",0,0 OK

Type	Syntax	Response	Example
Test	AT+ULOCCELL=?	+ULOCCELL: (list of supported <scan_mode>s),(list of supported <reserved1>),(list of supported <reserved2>),(list of supported <reserved3>),(list of supported <reserved4>),(list of supported <reserved5>) OK	+ULOCCELL: (0-1),(0),"","",(0),(0) OK

31.23.3 Defined values

Parameter	Type	Description
<scan_mode>	Number	Network scan mode: • 0 (factory-programmed value): normal • 1: deep scan
<reserved1>	Number	RFU
<reserved2>	String	RFU
<reserved3>	String	"" (reserved value)
<reserved4>	Number	0 (reserved value)
<reserved5>	Number	0 (reserved value)

31.23.4 Notes

LARA-R202 / LARA-R203 / LARA-R211 / LARA-R220 / LARA-R280 / TOBY-R2

- Only the normal scan is supported (<scan_mode>= 0).

LARA-R211 / TOBY-R2

- The command is not supported by LARA-R211-02B-00, TOBY-R200-02B-00 and TOBY-R202-02B-00.

SARA-U2 / LISA-U2

- If the module is registered on 3G RAT, the <scan_mode> setting will be ignored and a deep scan will be performed.

32 Location Services

The Location Services (LCS) reference model allows an LCS Client (which may or may not reside in a Target UE) to interact with an LCS server in order to obtain location information for one or more target UEs. Such information is obtained via a positioning function between the LCS server and the Target UE. See 3GPP TS 22.071 [107].

LCS can be invoked by the network (e.g. during an emergency call) or by the user through the AT commands described in this section. The position of the device is calculated either by network based on the GNSS measurements reported by the device, or by the device itself. To speed up such measurements, a location server provides the mobile with GNSS assistance data, that otherwise should have been downloaded from the satellites e.g. rough location, GPS satellites to look for, Doppler frequencies, etc. This allows fast position fixes, increases sensitivity and reduces module power consumption.

Generally two modes of A-GPS (Assisted GPS) can be distinguished:

- **MS-Assisted**: only pseudo-range values are measured by the GPS system and returned to the network; the position estimation is done within the network and can be reported to the device if it has started the location request;
- **MS-Based**: the network provides aiding for fast satellite acquisition to the GPS through the cellular control plane, i.e. via signalling messages. The position estimate is done by the device's GPS system and returned to the network or used locally if the device has started the location request.

Standalone poitioning means that no assistance is involved: GPS will work autonomously.

The LCS feature is linked to the GNSS architecture, but there is no correlation between LCS AT commands and GNSS AT commands. Since they use the same resource, in case of collisions LCS services have higher priority.

The implementation of the LCS AT commands follows the 3GPP standard defined by 3GPP TS 27.007 [2].

☞ The LCS feature is by factory-programmed disabled. After having enabled it through the +UDCONF=70 AT command, a module reset is needed; after that it is possible to issue the other LCS AT commands.

☞ If the LCS feature is disabled an error result code will be provided after the issuing of the LCS AT commands.

32.1 LCS positioning capabilities configuration +UDCONF=70

+UDCONF=70						
Modules	SARA-U201 SARA-U260-03S SARA-U270-03A SARA-U270-03S SARA-U270-04B SARA-U270-53S SARA-U270-73S SARA-U280-03S LISA-U200-03S LISA-U200-83S LISA-U201					
Attributes	**Syntax**	**PIN required**	**Settings saved**	**Can be aborted**	**Response time**	**Error reference**
	full	No	NVM	No	-	+CME Error

32.1.1 Description

Configures the LCS positioning capabilities types enabling the standalone, MS-Based and MS-Assisted. It is possible to simultaneously enable them or only a subset.

☞ The setting is saved in NVM and the new configuration will be effective at the next power on.

☞ u-blox cellular modules are certified according to all the capabilities and options stated in the Protocol Implementation Conformance Statement document (PICS) of the module. The PICS, according to 3GPP TS 51.010-2 [84], 3GPP TS 34.121-2 [85], 3GPP TS 36.521-2 [115] and 3GPP TS 36.523-2 [116], is a statement of the implemented and supported capabilities and options of a device. If the user changes the command settings during the certification process, the PICS of the application device integrating a u-blox cellular module must be changed accordingly.

32.1.2 Syntax

Type	Syntax	Response	Example
Set	AT+UDCONF=70,<positioning_capabilities>	OK	AT+UDCONF=70,1 OK

Type	Syntax	Response	Example
Read	AT+UDCONF=70	+UDCONF: 70,<positioning_capabilities> OK	AT+UDCONF=70 +UDCONF: 70,1 OK

32.1.3 Defined values

Parameter	Type	Description
<positioning_capabilities>	Number	Bitmask of LCS positioning capabilities. The allowed range is 0-7 (equivalent to bits 000-111). See Table 79 for a complete list of the combinations supported. The factory-programmed bitmask is 0 (i.e. all the capabilities are disabled)

32.1.4 Notes

Bit	Positioning capability type
0	Standalone
1	MS-Based
2	MS-Assisted

Table 79: Positioning capabilities bitmask explanation

32.2 Mobile originated location request +CMOLR

+CMOLR						
Modules	SARA-U201 SARA-U260-03S SARA-U270-03A SARA-U270-03S SARA-U270-04B SARA-U270-53S SARA-U270-73S SARA-U280-03S LISA-U200-03S LISA-U200-83S LISA-U201					
Attributes	**Syntax**	**PIN required**	**Settings saved**	**Can be aborted**	**Response time**	**Error reference**
	full	No	No	No	-	+CME Error

32.2.1 Description

Initiates/terminates a mobile originated location request (MO-LR) and configures the +CMOLRN URC.

The URC reporting provides the location information in the format of NMEA strings <NMEA-string>.

Additional information about positioning can be found in 3GPP TS 25.305 [95]. If positioning data cannot be provided at the expiring of timeout defined by the <timeout> parameter, the +CMOLRE URC is provided. See the Appendix A.12 for possible <err> values.

The <hor-acc-set>, <hor-acc>, <ver-req>, <ver-acc-set>, <ver-acc> and <vel-req> parameters can be used to request a specific accuracy of the MO-LR response.

The parameters <hor-acc> and <ver-acc> are only applicable if, respectively, <hor-acc-set> and <ver-acc-set> are set to 1. In addition, <ver-acc> is applicable only if <ver-req> is set to 1.

☞ It is not allowed to start multiple requests (every request must either have completed, having generated a URC, or be terminated with +CMOLR=0).

☞ Every request can be terminated only from the AT interface on which it was initiated.

☞ The URC +UUGIND=0,256 (meaning "GPS ownership lost") indicates the successful start up of an already activated GPS device.

32.2.2 Syntax

Type	Syntax	Response	Example
Set	AT+CMOLR=<enable>[,<method>[,<hor-acc-set>[,<hor-acc>[,<ver-req>[,<ver-acc-set>[,<ver-acc>[,<vel-req>[,<rep-mode>[,<timeout>[,<interval>[,<shape-rep>[,<plane>[,<NMEA-rep>[,<third-party-address>[,<resp-time-category>]]]]]]]]]]]]]]	OK	AT+CMOLR=1 OK

Type	Syntax	Response	Example
Read	AT+CMOLR?	+CMOLR: <enable>,<method>,<hor-acc-set>,[<hor-acc>],<ver-req>,[<ver-acc-set>],[<ver-acc>],<vel-req>,<rep-mode>,<timeout>,[<interval>],<shape-rep>,[<plane>],[<NMEA-rep>],[<third-party-address>],<resp-time-category> OK	+CMOLR: 0,0,0,,0,,,0,0,0,,,0,"","",0 OK
Test	AT+CMOLR=?	+CMOLR: (list of supported <enable>s),(list of supported <method>s),(list of supported <hor-acc-set>s),(list of supported <hor-acc>s),(list of supported <ver-req>s),(list of supported <ver-acc-set>s),(list of supported <ver-acc>s),(list of supported <vel-req>s),(list of supported <rep-mode>s),(list of supported <timeout>s),(list of supported <interval>s),(list of supported <shape-rep>s),(list of supported <plane>s),(list of supported <resp-time-category>s) OK	+CMOLR: (0,1),(0,1,4,5),(0,1),(0-127),(0,1),(0,1),(0-127),(0-4),(0),(1-65535),(1-65535),(),0,(0,1) OK
URC		+CMOLRN: <NMEA-string>	+CMOLRN: "$GPRMC,235947.000,V,0000.0000,N,00000.0000,E,,,041299,,*1D"

32.2.3 Defined values

Parameter	Type	Description
<enable>	Number	Configures the reporting location as a result of a MO-LR. Allowed values: • 0: reporting and positioning disabled. At boot time the reporting is disabled. • 1: enable the NMEA strings reporting through +CMOLRN URC Lack of data when timeout occurs is indicated by +CMOLRE URC
<method>	Number	Sets the positioning type. Only one positioning type can be enabled at any given time. Allowed values for MO-LR: • 0 (default value): unassisted GPS. Autonomous GPS only, no use of assistance data • 1: Assisted GPS (see Chapter 32.2.4) • 4: basic self location (the network determines the position technology) • 5: transfer to third party. The parameters <shape-rep> and <NMEA-rep> are irrelevant (any values are accepted and disregarded). The third party address is given in the parameter <third-party-address> (see Chapter 32.2.4)
<hor-acc-set>	Number	Horizontal accuracy presence: • 0 (default value): not set/specified • 1: set in parameter <hor-acc>
<hor-acc>	Number	Requested accuracy as horizontal uncertainty exponent (see the 3GPP TS 23.032 [96] subclause 6.2). The value range is 0-127. The default value is 127, which means that the uncertainty radius is 10 x [(1.1)127 - 1] ~ 1800 km.
<ver-req>	Number	Vertical coordinate (altitude) request flag: • 0 (default value): not requested; a 2D location fix is acceptable. The parameters <ver-acc-set> and <ver-acc> do not apply • 1: requested; a 3D location fix is required
<ver-acc-set>	Number	Vertical accuracy presence: • 0 (default value): not set/specified • 1: set in parameter <ver-acc>
<ver-acc>	Number	Requested accuracy as vertical uncertainty exponent (see the 3GPP TS 23.032 [96] subclause 6.4). The value range is 0-127. The default value is 127, which means that the uncertainty radius is 10 x [(1.1)127 - 1] ~ 1800 km.
<vel-req>	Number	Requested velocity type (see the 3GPP TS 23.032 [96] subclause 8.6): • 0 (default value): velocity not requested

Parameter	Type	Description
		• 1: horizontal velocity requested • 2: horizontal velocity and vertical velocity requested • 3: horizontal velocity with uncertainty requested • 4: horizontal velocity with uncertainty and vertical velocity with uncertainty requested
<rep-mode>	Number	Reporting mode. The <timeout> parameter specifies the timeout for the MO-LR response request. Allowed value: • 0: single report
<timeout>	Number	Indicates how long the MS will wait for a response after a MO-LR. The value range is in seconds from 1 to 65535. For GNSS measurements, the allowed values are 1, 2, 4, 8, 16, 32, 64 and 128 (default value). All other values are truncated to these figures.
<interval>	Number	This parameter is ignored.
<shape-rep>	Number	Ignored.
<plane>	Number	The parameter specifies which communication mode is used for MO-LR. Allowed value: • 0 (default value): control plane
<NMEA-rep>	String	Specifies possible restrictions in supported NMEA strings. The supported NMEA strings are specified as a comma separated values inside one string. If the parameter is omitted or an empty string is given, no restrictions apply and all NMEA strings are supported. The default value is that all strings are supported. (Example: "$GPRMC, $GPGSA,$GPGSV")
<third-party-address>	String	The parameter is applicable to reporting to third party only, and specifies the address to the third party. This parameter is mandatory when <method> value is set to 5, otherwise it is ignored
<NMEA-string>	String	String type in UTF-8. This parameter provides an NMEA-string as defined in IEC 61162 [108]. This parameter shall not be subject to conventional character conversion as per +CSCS The NMEA string is enclosed in double quotes, without the trailing <CR><LF> characters
<resp-time-category>	Number	Response time category of a location request. Allowed values are: • 0: low delay • 1 (default value): delay tolerant

32.2.4 Notes

- For the methods that require assistance data, the assistance data obtained from the network is used for a UE-based GPS location procedure
- If <method>=5 (Transfer to third party) the lack of data at each timeout is not indicated by +CMOLRE URC if reporting to third party is specified

32.3 Mobile terminated location request notification +CMTLR

+CMTLR						
Modules	SARA-U201 SARA-U260-03S SARA-U270-03A SARA-U270-03S SARA-U270-04B SARA-U270-53S SARA-U270-73S SARA-U280-03S LISA-U200-03S LISA-U200-83S LISA-U201					
Attributes	**Syntax**	**PIN required**	**Settings saved**	**Can be aborted**	**Response time**	**Error reference**
	full	No	No	No	-	+CME Error

32.3.1 Description

Configures the Mobile Terminated Location Request (MT-LR) notifications to the TE by an unsolicited result code (URC) through the parameter <subscribe>. It is possible to enable notification of MT-LR performed over the control plane. Relevant location request parameters are provided in the +CMTLR URC. This URC is reported upon arrival of a Mobile Terminated Location Request. To differentiate multiple requests, every request is given a different <handle-id>. This parameter is used when allowing or denying location disclosure with +CMTLRA.

32.3.2 Syntax

Type	Syntax	Response	Example
Set	AT+CMTLR=<subscribe>	OK	AT+CMTLR=1 OK
Read	AT+CMTLR?	+CMTLR: <subscribe> OK	+CMTLR: 1 OK
Test	AT+CMTLR=?	+CMTLR: (list of supported <subscribe>s) OK	+CMTLR: (0-1) OK
URC		+CMTLR: <handle-id>,<notification-type>,<location-type>,[<client-external-id>],[<client-name>][,<plane>]	

32.3.3 Defined values

Parameter	Type	Description
<subscribe>	Number	Configures the subscription for MT-LR notifications: • 0: reporting and positioning notifications disabled • 1: notifications of MT-LR over control plane subscribed
<handle-id>	Number	ID associated with each MT-LR used to distinguish specific request in case of multiple requests. The value range is 1-255
<notification-type>	Number	Information about the user's privacy: • 0: the subscription may stipulate that positioning the user by a third party is allowed and the network may choose to inform the user as a matter of courtesy • 1: locating the user is allowed if the user ignores the notification • 2: locating the user is forbidden if the user ignores the notification
<location-type>	Number	Indicates what type of the location is requested: • 0: current location • 1: current or last known location • 2: initial location
<client-external-id>	String	Indicates the external client where the location information is sent to (if required)
<client-name>	String	The string identifying the external client requesting the user's location
<plane>	Number	The parameter specifies whether the MT-LR came over control plane: • 0: control plane

32.4 Mobile terminated location request disclosure allowance +CMTLRA

+CMTLRA						
Modules	SARA-U201 SARA-U260-03S SARA-U270-03A SARA-U270-03S SARA-U270-04B SARA-U270-53S SARA-U270-73S SARA-U280-03S LISA-U200-03S LISA-U200-83S LISA-U201					
Attributes	**Syntax**	**PIN required**	**Settings saved**	**Can be aborted**	**Response time**	**Error reference**
	full	No	No	No	-	+CME Error

32.4.1 Description

Allows or disallows the disclosure of the location of the TE as a result of a former MT-LR.

32.4.2 Syntax

Type	Syntax	Response	Example
Set	AT+CMTLRA=<allow>,<handle_id>	OK	AT+CMTLRA=1,1 OK
Test	AT+CMTLRA=?	+CMTLRA: (list of supported <allow>s),(list of supported <handle_id>s)	+CMTLRA: (0,1),(1-255) OK

Type	Syntax	Response	Example
		OK	

32.4.3 Defined values

Parameter	Type	Description
<allow>	Number	Configures the allowance for location disclosure: • 0: location disclosure allowed • 1: location disclosure not allowed
<handle_id>	Number	ID associated with each MT-LR used to distinguish specific request in case of multiple requests. The value is given in +CMTLR. The value range is 1-255

32.4.4 Notes

- No error result code is reported if an invalid <handle_id> is used, as long as it is in the range 1-255

32.5 Report mobile originated location request error +CMOLRE

+CMOLRE						
Modules	SARA-U201 SARA-U260-03S SARA-U270-03A SARA-U270-03S SARA-U270-04B SARA-U270-53S SARA-U270-73S SARA-U280-03S LISA-U200-03S LISA-U200-83S LISA-U201					
Attributes	**Syntax**	**PIN required**	**Settings saved**	**Can be aborted**	**Response time**	**Error reference**
	full	No	No	No	-	+CME Error

32.5.1 Description

Configures the verbose format of the result code +CMOLRE: <err> as an indication of an error relating to the functionality for the mobile originated location request (MO-LR) error reporting format. When enabled, the MT related verbose error cause is given.

32.5.2 Syntax

Type	Syntax	Response	Example
Set	AT+CMOLRE=[<verbose_mode_enable>]	OK	AT+CMOLRE=1 OK
Read	AT+CMOLRE?	+CMOLRE: <verbose_mode_enable> OK	+CMOLRE: 1 OK
Test	AT+CMOLRE=?	+CMOLRE: (list of supported <verbose_mode_enable>s) OK	+CMOLRE: (0,1) OK
URC		+CMOLRE: <err>	If <verbose_mode_enable>=0 +CMOLRE: 2 If <verbose_mode_enable>=1 +CMOLRE: Not enough satellites

32.5.3 Defined values

Parameter	Type	Description
<verbose_mode_enable>	Number	• 0 (default value): disabled. The error code is in expressed in numeric format • 1: enabled. The error code is presented with verbose text strings
<err>	Number or string	Error numeric code or textual description. See the appendix Appendix A.12

32.6 LCS event notification +ULCSEVT

+ULCSEVT						
Modules	SARA-U201 SARA-U260-03S SARA-U270-03A SARA-U270-03S SARA-U270-04B SARA-U270-53S SARA-U270-73S SARA-U280-03S LISA-U200-03S LISA-U200-83S LISA-U201					
Attributes	**Syntax**	**PIN required**	**Settings saved**	**Can be aborted**	**Response time**	**Error reference**
	full	No	No	No	-	+CME Error

32.6.1 Description

Configures the reporting of LCS events via the +UULCSEVT URC.

☞ This is a test command, used for getting informations on LCS internals for debugging purposes. It does not affect the behaviour of LCS or GPS.

☞ The positioning related parameters display invalid values when no fix has been calculated.

32.6.2 Syntax

Type	Syntax	Response	Example
Set	AT+ULCSEVT=<event_reporting_enable>	OK	AT+ULCSEVT=1 OK
Read	AT+ULCSEVT?	+ULCSEVT: <event_reporting_enable> OK	+ULCSEVT: 1 OK
Test	AT+ULCSEVT=?	+ULCSEVT: (list of supported <event_reporting_enable>s) OK	+ULCSEVT: (0,1) OK
URC		+UULCSEVT: <AcT>,<latitude>,<longitude>,[<altitude>],[<uncertainty>],<time>,<T1>,<T2>,<T3>	+UULCSEVT: 2,45.713745,13.740721,310,,"15/05/18,12:20:06",7221,32062,2

32.6.3 Defined values

Parameter	Type	Description
<event_reporting_enable>	Number	• 0 (default value): URC disabled • 1: URC enabled
<AcT>	Number	Indicates the radio access technology: • 0: GSM • 2: UTRAN • 7: LTE
<latitude>	Number	Degrees of latitude from -90 to 90 in decimal format
<longitude>	Number	Degrees of longitude from -180 to 180 in decimal format
<altitude>	Number	Altitude in meters
<uncertainty>	Number	Uncertainty in meters from 0 to 1800000 m
<time>	String	GPS time in the format "yy/MM/dd,hh:mm:ss", where characters indicate year (two last digits), month, day, hour, minutes, seconds.
<T1>	Number	Time in milliseconds from dialling an emergency call to assistance data reception from the network.
<T2>	Number	Time in milliseconds from assistance data reception from the network to when the protocol stack receives the fix data from the GPS.
<T3>	Number	Time in milliseconds from when the protocol stack receives the fix data from the GPS to when the fix data is sent to the network.

33 DTMF

33.1 DTMF detection +UDTMFD

+UDTMFD						
Modules	TOBY-L200-02S TOBY-L200-03A TOBY-L200-03S TOBY-L210-02S TOBY-L210-03A TOBY-L210-03S TOBY-L210-62S TOBY-L220-02S TOBY-L280 MPCI-L200-02S MPCI-L200-03S MPCI-L210-02S MPCI-L210-03S MPCI-L220-02S MPCI-L280					
	LARA-R202 LARA-R203 LARA-R211 LARA-R280 TOBY-R2					
	SARA-U2 LISA-U200-02S LISA-U200-03S LISA-U200-52S LISA-U200-62S LISA-U200-83S LISA-U201 LISA-U260-02S LISA-U270-02S LISA-U270-62S LISA-U270-63S LISA-U270-68S					
	SARA-G340 SARA-G350 SARA-G350-53S LEON-G100-07S LEON-G100-08S					
Attributes	**Syntax**	**PIN required**	**Settings saved**	**Can be aborted**	**Response time**	**Error reference**
	partial	No	No	No	-	+CME Error

33.1.1 Description

Enables/disables the DTMF detector and, independently for each specific AT terminal, the related URCs.

During a voice call, the DTMF detector recognizes the presence of DTMF tones in the RX voice channel. The tones are generated by remote party by e.g. digit press on a DTMF keypad.

The +UUDTMFD URC returns the recognized DTMF digits (set {0-9,#,*A,B,C,D}).

Once enabled, the DTMF detector is automatically started at the next call set-up confirmation and stopped at call drop or when it is explicitly disabled.

If the DTMF detector is enabled, the In-Band Modem engine is reserved thus the eCall and other In-Band Modem applications are not available. For more details see the eCall section.

If the In-Band Modem engine is reserved by other In-Band Modem applications, the command immediately provides an error result code ("+CME ERROR: 3" if +CMEE=1 or "+CME ERROR: operation not allowed" if +CMEE=2).

URCs are issued at any DTMF digit detection, if the URCs have been enabled on the specific terminal.

QUICK START: AT+UDTMFD=1,2 (start in robust mode).

Issue the enabling command before the call set-up, otherwise the detector is not started.

For the complete description of the DTMF detection functionality see the corresponding module audio application note.

33.1.2 Syntax

Type	Syntax	Response	Example
Set	AT+UDTMFD=<urc_en>[,<mode>[,<att_cfg>[,<threshold>[,<immunity>[,<max_int>]]]]]	OK	AT+UDTMFD=1,2 OK
Read	AT+UDTMFD?	+UDTMF: <urc_en>,<mode>,<att_cfg>,<threshold>,<immunity>,<max_int>,<att> OK	+UDTMFD: 1,2,4,100,14,2,4 OK
Test	AT+UDTMFD=?	+UDTMFD: (list of supported <urc_en>'s),(list of supported <mode>'s),(list of supported <att_cfg>'s),(list of supported <threshold>'s),(list of supported <immunity>'s),(list of supported <max_int>'s) OK	+UDTMFD: (0-1),(0-2),(0-15),(100-10 000),(0-20),(1-255) OK
URC		+UUDTMFD: <DTMF>	+UUDTMFD: #
URC		+UUDTMFDE: <errid>	+UUDTMFD: 1

33.1.3 Defined values

Parameter	Type	Description
<urc_en>	Number	URC generation on the current terminal: • 0 (factory-programmed value): disabled • 1: enabled
<mode>	Number	DTMF detector configuration: • 0 (factory-programmed value): disabled • 1: enabled/restarted in normal mode • 2: enabled/restarted in robust mode
<att_cfg>	Number	Attenuation applied on the signal at decoder input to manage arithmetic operations. The range goes from 0 to 15, 6 dB attenuation each step: • TOBY-L2 / MPCI-L2 / LARA-R2 / TOBY-R2 / SARA-U201 / SARA-U260 / SARA-U270-00S / SARA-U270-00X / SARA-U270-03A / SARA-U270-03S / SARA-U270-53S / SARA-U270-73S / SARA-U280 / LISA-U2 / SARA-G3 / LEON-G1 - The factory-programmed value is 4 (24 dB attenuation) • SARA-U270-04B - The factory-programmed value is 3 (18 dB attenuation)
<threshold>	Number	Numeric threshold to detect DTMF tones. The range goes from 100 to 10000: • TOBY-L2 / MPCI-L2 - The factory-programmed value is 800 • LARA-R2 / TOBY-R2 / SARA-U201 / SARA-U260 / SARA-U270-00S / SARA-U270-00X / SARA-U270-03A / SARA-U270-03S / SARA-U270-53S / SARA-U270-73S / SARA-U280 / LISA-U2 / SARA-G3 / LEON-G1 - The factory-programmed value is 400 • SARA-U270-04B - The factory-programmed value is 1600
<immunity>	Number	Speech immunity level. The higher the level, the higher the immunity to speech. The range goes from 0 (minimum immunity) to 20 (maximum immunity). The factory-programmed value is 14.
<max_int>	Number	Maximum interruption that a detected DTMF tone may have, such that it is still interpreted as a single digit. In multiples of 20 ms; the range goes from 1 to 255. The factory-programmed value is 2 (40 ms).
<att>	Number	Actual attenuation applied on the signal at decoder input. The starting value is <att_cfg>. If an arithmetic overflow occurs, it is automatically increased.
<DTMF>	Character	Detected DTMF digits; from the set {0-9,#,*,A-D}.
<errid>	Number	DTMF error code: • 1: arithmetic overflow • 2: audio driver error

33.1.4 Notes

- The maximum interruption <max_int> also represents the expected minimum pause between two DTMF tones.
- The detector running in robust mode is less prone to false detections and more sensitive to speech distortions caused by e.g. low bit-rate AMR codec.
- The factory-programmed value of command parameters is set at each module start up.
- If the optional parameters are omitted the settings are left unchanged.

LARA-R211 / TOBY-R2

- During VoLTE calls +UDTMFD is not functional because the DTMF detector is not effective when DTMF tones are generated by the network as RTP events.

LARA-R202 / LARA-R203

- +UDTMFD is functional also during VoLTE calls: RTP events are detected, but they are not audible.

TOBY-L2 / MPCI-L2

- If <mode>=1 or 2 the command provides an error result code ("+CME ERROR: operation not allowed" if +CMEE=2) if +UPLAYFILE is playing an audio file.
- <errid>=2 is not supported.

SARA-U2 / LISA-U2

- <errid>=2 is not supported.

SARA-G340 / SARA-G350-00S / SARA-G350-00X / SARA-G350-01B / SARA-G350-01S / SARA-G350-02S / SARA-G350-02X / LEON-G1

- <errid>=2 is not supported.

SARA-G340-00S / SARA-G340-01S / SARA-G350-00S / SARA-G350-00X / SARA-G350-01B / SARA-G350-01S / LEON-G1

- The <mode> parameter is mandatory.

33.2 Local and in-band DTMF tone generation configuration +UDCONF=31

+UDCONF=31						
Modules	TOBY-L200-02S TOBY-L200-03A TOBY-L200-03S TOBY-L210-02S TOBY-L210-03A TOBY-L210-03S TOBY-L210-62S TOBY-L220-02S TOBY-L280					
	LARA-R202 LARA-R203 LARA-R211 LARA-R280 TOBY-R2					
	SARA-U2 LISA-U200-01S LISA-U200-02S LISA-U200-03S LISA-U200-52S LISA-U200-62S LISA-U200-83S LISA-U201 LISA-U230 LISA-U260 LISA-U270					
	SARA-G340-02S SARA-G340-02X SARA-G350-02A SARA-G350-02S SARA-G350-02X SARA-G350-53S					
Attributes	**Syntax**	**PIN required**	**Settings saved**	**Can be aborted**	**Response time**	**Error reference**
	full	No	No	No	-	+CME Error

33.2.1 Description

Configures the DTMF tone generation.

☞ The local and in-band DTMF tone generation applies to user-required tones only, i.e. started via AT+VTS and AT+UVTS commands and not by SIM Toolkit application (aka proactive DTMF tones).

33.2.2 Syntax

Type	Syntax	Response	Example
Set	AT+UDCONF=31,<local_tone_generation>	OK	AT+UDCONF=31,1 OK
Read	AT+UDCONF=31	+UDCONF: 31,<local_tone_generation> OK	AT+UDCONF=31 +UDCONF: 31,1 OK

33.2.3 Defined values

Parameter	Type	Description
<local_tone_generation>	Number	Local DTMF tone generation enable / disable: • 0 (factory-programmed value): Local and In-band DTMF tone generation disabled • 1: Local DTMF tone generation enabled • 2: In-band DTMF tone generation enabled

33.2.4 Notes

TOBY-L2 / LARA-R2 / TOBY-R2 / SARA-U2 / LISA-U2

- <local_tone_generation>=2 is not supported.

SARA-G3

- <local_tone_generation>=1 is not supported.

34 eCall

34.1 Introduction

eCall (emergency Call) specification [73] standardizes the transfer of a set of 140 bytes of data, called Minimum Set of Data (**MSD**) during an emergency voice call to a Public Safety Answering Point (**PSAP**). According to 3GPP specifications, the eCall In-band Modem (**eIM**) of the In-Vehicle System (**IVS**) immediately transmits the MSD after the call setup; the MSD is received by the eIM of the PSAP.

In the call setup message the IVS Network Access Device (**NAD**) shall set the "Service Category" information (IE) according to ETSI TS 122 101 [71]. This eCall "flag" enables a serving "Mobile Switching Centre" (MSC) that supports this functionality, to differentiate between speech only Teleservice 12 emergency calls and eCalls. Additionally the MSC may also be able to discriminate between Manually Initiated eCalls and Automatically Initiated eCalls.

When the IVS eIM is in activated state, during the call, the eIM receiver starts monitoring link messages from PSAP eIM by analyzing the audio stream on the downlink speech channel. Once the link with PSAP eIM is established, the IVS eIM enters the so-called data-mode: the IVS microphone and loudspeaker are muted and the eIM starts the MSD transfer. After the data transfer is completed, either successfully or with errors, the IVS switches from data-mode into voice-mode: the microphone and the loudspeaker are un-muted and the voice call between IVS and PSAP proceeds normally. The IVS eIM enters idle-mode and monitors new incoming messages from PSAP eIM.

The eCall standard introduces specific mobility management procedures to be implemented in the IVS NAD. In particular, the IVS NAD is configured at boot time by a valid, eCall-enabled SIM/USIM to work either in "eCall only" mode or in normal mode.

More precisely, the eCall feature is a Release 10 feature that can be enabled on the USIM by NMO. If a USIM is eCall enabled (e.g. service n. 89 is active), the FDN and SDN services may also be used to define how the MS will work, i.e. either as an eCall only device or as eCall-enabled device.

In particular, if the FDN service is enabled and activated, the MS acts as eCall-only device and the FDN phonebook contains 2 entries which are the test and reconfiguration numbers. Only these two numbers can be dialed in addition to the Manually Initiated and Automatically Initiated emergency calls.

If the MS acts as an eCall-enabled device, the SDN service is activated and the SDN phonebook contains the test and reconfiguration numbers in its last 2 entries.

If a MS is equipped with a SIM which is not eCall enabled, it can be set to eCall-only and eCall-enabled device via the +UECALLSTAT command. In this case, and if the FDN or SDN phonebooks are not properly configured, test and reconfiguration numbers may be specified via the +UDCONF=90 command.

34.1.1 About eCall AT commands

The 3GPP eCall feature is implemented and controlled by AT interface through a set of dedicated AT commands:

- AT+UECALLDATA: used to
  - activate the eIM, passing the MSD data
  - update the MSD during the emergency call
  - enable the eIM feature, reserving In-band modem audio resources for eCall
  - enable unsolicited indications
- AT+UECALLVOICE: used to
  - configure the microphone / speaker switching handling
  - control and monitor microphone and speaker switching
- AT+UECALLSTAT: used to check the eCall SIM configuration / force a configuration (eCall only mode)
- AT+UDCONF=90: used to set the eCall and InBM test configuration
- AT+UECALLTYPE: used to configure the eCall flag or Test eCall
- AT+CECALL: used to trigger a Manually Initiated eCall, a Automatically Initiated eCall, a Test or a Reconfiguration call
- +UUECALLDATA: eIM status indications

- +UUECALLVOICE: microphone/loudspeaker status indications
- AT+UECALLCFG: used to
  - o set eCall audio path mode

34.2 eIM sends and receives data +UECALLDATA

+UECALLDATA						
Modules	TOBY-L4106					
	SARA-U201 SARA-U270 LISA-U200-02S LISA-U200-03S LISA-U200-52S LISA-U200-62S LISA-U200-83S LISA-U201 LISA-U260-02S LISA-U270-02S LISA-U270-62S LISA-U270-63S LISA-U270-68S					
	SARA-G340 SARA-G350 SARA-G350-53S LEON-G100-07S LEON-G100-08S					
Attributes	**Syntax**	**PIN required**	**Settings saved**	**Can be aborted**	**Response time**	**Error reference**
	partial	No	No	No	-	+CME Error

34.2.1 Description

Activates the IVS eIM for a single emergency call (eCall session) and provides the IVS eIM with the MSD to transfer. If the activation command is issued when there is no call ongoing, the eIM is armed, i.e. the MSD is prepared for transmission. The eIM is then automatically activated as soon as the call setup indication is received. The eIM can be armed/activated once per eCall session. Further activations immediately provide an error result code.

The eIM can be activated in PULL or PUSH mode. In PUSH mode, the IVS eIM sends the INITIATION signal to request to PSAP to pull the MSD, i.e. it asks the PSAP to send the "SEND MSD" signal. In PULL mode, the IVS eIM waits for START signal sent from the PSAP.

The command can also be used for terminating the eIM: the last +UECALLDATA activation command is aborted.

The command serves also to update the IVS eIM with new MSD data. The update command can be issued at any time during the eCall session and may or may not force an eIM reset.

☞ Read and set commands other than the enable/disable the eCall feature (<op_code>=4) are available only if the eCall feature is turned on.

☞ The terms "SEND MSD", "INITIATION" and "application layer ACK" (AL-ACK), mentioned in EN 16062 [72], correspond to the START signal sent by PSAP to IVS, the START signal sent by IVS to PSAP and the higher-layer ACK (HL-ACK), mentioned in 3GPP TS 26.267 [73].

34.2.2 Syntax

Type	Syntax	Response	Example
Generic syntax			
Set	AT+UECALLDATA=<op_code>[,<param1>[,<data>]]	OK	AT+UECALLDATA=1,0,"4D5344" OK
In-Band Modem abort			
Set	AT+UECALLDATA=0	OK	AT+UECALLDATA=0 OK
eCall In-Band Modem activation			
Set	AT+UECALLDATA=1,<PUSH_PULL>,<data>	OK	AT+UECALLDATA=1,0,"4D5344" OK
MSD update			
Set	AT+UECALLDATA=2,<update_mode>,<data>	OK	AT+UECALLDATA=2,1,"4D5344" OK
URC enabling			
Set	AT+UECALLDATA=3,<urc_state>	OK	AT+UECALLDATA=3,1 OK
eCall feature enabling			

Type	Syntax	Response	Example
Set	AT+UECALLDATA=4,<eCall_enabling>	OK	AT+UECALLDATA=4,1 OK
HLAP data timers status configuration			
Set	AT+UECALLDATA=5,<data_timer>,<timer_status>	OK	AT+UECALLDATA=5,0,1 OK
HLAP data timers value configuration			
Set	AT+UECALLDATA=6,<data_timer>,<timer_value>	OK	AT+UECALLDATA=6,0,20000 OK
Read	AT+UECALLDATA?	+UECALLDATA: <state>,<urc_state> OK	+UECALLDATA: 0,1 OK
Test	AT+UECALLDATA=?	+UECALLDATA: (list of supported <op_code>s),(list of supported <param1>s) OK	+UECALLDATA: (0-4),(0-2) OK
URC		+UUECALLDATA: <urc_id>[,<data>]	+UUECALLDATA: 7,"0B"

34.2.3 Defined values

Parameter	Type	Description
<op_code>	Number	Operation to perform: • 0: abort. The In-Band Modem is terminated • 1: arm/activate eCall In-Band Modem (eIM) • 2: update MSD • 3: enable/disable URCs • 4: enable/disable the eCall feature • 5: enable/disable timer T9 • 6: configure timer T9
<PUSH_PULL>	Number	Specifies the PULL/PUSH mode: • 0: PULL mode • 1: PUSH mode
<data>	String	MSD to be sent. Each byte is coded with two characters in hex notation. It shall not exceed 280 characters (140 bytes).
<update_mode>	Number	Specifies the update mode: • 0: update in idle only • 1: immediate update / force eIM reset
<urc_state>	Number	URCs current state: • 0 (factory-programmed value): URCs disabled • 1: URCs enabled without IVS events (without URCs with id 11-19) • 2: all URCs enabled
<eCall_enabling>	Number	• 0 (factory-programmed value): eCall feature disabled • 1: eCall feature enabled. URCs are automatically enabled (same as AT +UECALLDATA=3,1)
<state>	Number	eIM current state: • 0: off • 1: armed/active
<data_timer>	Number	Data timers: • 0: T9 timer
<timer_status>	Number	Configures the status of T9 HLAP timer. Allowed values: • 0: timer disabled • 1 (factory-programmed value): timer enabled
<timer_value>	Number	Timer value expressed in milliseconds. The factory-programmed value is: • 3600000 ms (1 hour) for T9 timer
<urc_id>	Number	Specifies the event type: • 0: MSD correctly sent, HL-ACK check bits received and recorded.

Parameter	Type	Description
		<data>: four information bits received through HL-ACKs, returned within single byte hex data (e.g.: +UUECALLDATA: 0,"0B" -> 0xB: 4 information bits) • 1: eIM lost synchronization with PSAP • 2: T6 or T7 timer expired (MSD transfer marked as failure) • 3: reserved • 4: eIM is terminated: T9 timer expired • 5: eIM is terminated: audio error • 6: eIM is terminated: fatal error • 7: eIM is terminated: call drop • 8: generic eIM error • 11: IVSEVENT_SENDINGSTART: eIM starts sending the INITIATION signal (only in PUSH mode). Also indicates that the call set-up is completed • 12: IVSEVENT_SENDINGMSD: "SEND MSD" signal received, eIM starts sending MSD • 13: IVSEVENT_RESTARTMSD: "SEND MSD" signal received too often, assume PSAP sync failure • 14: IVSEVENT_CONTROLSYNC: IVS eIM is synchronizing with PSAP eIM • 15: IVSEVENT_CONTROLLOCK: IVS eIM is synched with PSAP eIM • 16: IVSEVENT_LLACKRECEIVED: 2. link-layer ACK received and recorded • 17: IVSEVENT_HLACKRECEIVED: 2. higher-layer ACK received and recorded • 18: IVSEVENT_IDLEPOSTRESET: IVS eIM is idling after a full reset. Reset is done after the sync loss, due to e.g. end of PSAP transmission • 19: IVSEVENT_IDLEPOSTSTART: IVS eIM transmitter is idling after the transmission of the INITIATION signal (PUSH mode) • 20: MSD update request received. MSD update deferred since the IVS is currently transmitting • 21: MSD update done. The IVS transmitter is ready to send the new MSD at next PULL request • 22: MSD update request cannot be processed
<param1>	Number	Type and supported content depend on the related <op_code> parameter; see the <op_code> specification.

34.2.4 Notes

TOBY-L4

- eCall feature, URC enabling, T9 status configuration and T9 value configuration are part of the eCall controller configuration which is stored in the NVM. At the module boot, the eCall controller is configured according to stored values.
- The URC enabling is a global setting, so all clients will get the same events based on it.
- The IVS eIM activation is effective for multiple eCall sessions. The last provided MSD is used whenever required.
- While the eIM is activated all speech handling is done by the eCall controller (even if dialling a normal call using the ATD command.
- While the eIM is activated all incoming calls are treated as calls from the emergency call center.
- When T9 timer expires it deactivates the eIM.
- If T9 expires when call is in progress, it is prolonged until call is dropped.
- When call is dropped and T9 is disabled, eIM is aborted.
- <urc_id>=19 is not supported.

SARA-U2 / LISA-U2 / SARA-G3 / LEON-G1

- <op_code>=5 and 6 are not supported.
- <urc_id>=4 is not supported.

34.3 IVS eIM voice control +UECALLVOICE

+UECALLVOICE						
Modules	TOBY-L4106					
	SARA-U201 SARA-U270 LISA-U200-02S LISA-U200-03S LISA-U200-52S LISA-U200-62S LISA-U200-83S LISA-U201 LISA-U260-02S LISA-U270-02S LISA-U270-62S LISA-U270-63S LISA-U270-68S					
	SARA-G340 SARA-G350 SARA-G350-53S LEON-G100-07S LEON-G100-08S					
Attributes	**Syntax**	**PIN required**	**Settings saved**	**Can be aborted**	**Response time**	**Error reference**
	partial	No	No	No	-	+CME Error

34.3.1 Description

Configures the control and/or controls the TX and RX voice path connections to voice resources (microphone and loudspeaker respectively) and to eIM transmitter (eIM receiver is not affected by the control). The command serves to handle the switching[10] of the voice resources according to BS EN 16062 [72], in particular to configure the HLAP timers to operate according to HLAP specifications [72], Annex A, Table of Timings.

With this command, it is possible to implement the voice control following several strategies:

- Internal handling: eIM handles voice path connections in normal eCall transactions and, with HLAP timers, in abnormal eCall transactions. See the Voice control internal handling for details
- External handling: the application processor exclusively handles voice path connections. The internal handling must be disabled before the eCall session is started
- Mixed handling: eIM and application processor share handling of voice path connections

☞ Read and set commands are available only if the eCall feature is turned on.

☞ The internal handling can be enabled / disabled during the eCall.

Table 80 summarizes the impact of the voice resource switching on the voice path connections:

Voice resource	Status	Description
Microphone	Un-muted	The microphone is connected to the TX voice path. The eIM transmitter is disconnected from the TX voice path
	Muted	The microphone is disconnected from the TX voice path. The eIM transmitter is connected to the TX voice path
Loudspeaker	Un-muted	Both the loudspeaker and the eIM receiver are connected to the RX voice path
	Muted	The loudspeaker is disconnected from the RX voice path. The eIM transmitter is connected to the RX voice path

Table 80: Voice path connections as function of the microphone/loudspeaker status

The microphone and eIM transmitter are exclusively connected to the TX voice path, while the eIM receiver is always connected to the RX voice path (always listening to PSAP). Of course, eIM can be connected to the voice paths only if armed/activated (see the +UECALLDATA command).

☞ Loudspeaker switches do not affect the eIM functionality.

The command groups six operations:

1. Internal voice resource control configuration
   When the internal voice control is enabled, the eIM takes care to perform microphone/loudspeaker switching during a normal or abnormal eCall transaction. Switching during the normal eCall transaction is operated at pre-defined internal control points. Some of the control points are configurable, i.e. they can be enabled or not to perform the switching (see control points configuration).In particular (NCF: not configurable):
   - NCF - the microphone and loudspeaker are muted at call set-up
   - SP0 - the loudspeaker is muted at call set-up and un-muted after 5 s
   - MP0 - the microphone is muted as soon as the eIM transmitter starts sending INITIATION signal
   - MP1 - the microphone is muted as soon as the eIM transmitter starts sending MSD
   - SP1 - the loudspeaker is muted as soon as the eIM transmitter starts sending MSD

[10] A switch performs a muting of un-muted voice resource or vice versa

- MP2 - the microphone is un-muted as soon as the eIM receiver receives an LL-ACK message
- SP2 - TH internal timer is started as soon as the eIM receiver receives a HL-ACK message and the loudspeaker un-muted at expiration
- MP3 - the microphone is un-muted as soon as the eIM receiver receives a HL-ACK message
- SP3 - the loudspeaker is un-muted as soon as the eIM goes in idle after reset
- MP4 - the microphone is un-muted as soon as the eIM goes in idle after reset
- MP5 - the microphone is un-muted as soon as the eIM transmitter goes in idle after sending INITIATION signal
- MP6 - the microphone is un-muted as soon as the eIM transmitter stops sending INITIATION signal because of reception of SEND MSD signal

Abnormal eCall transactions are handled by T5, T6 and T7 timers. Enabled internal voice control is a pre-requisite for timers to operate.

For more details see Voice control internal handling.

TOBY-L4
The internal voice control is not available. The handling of speech during a normal or abnormal eCall transaction is generally performed on IVS URC events (see the +UECALLDATA Defined Values), according to the Table 81:

Event / IVS event	Microphone mute	Loudspeaker mute	Timers
IVSEVENT_SENDINGSTART	ON	ON	Start T5 timer
IVSEVENT_SENDINGMSD	ON		Start T7 timer
IVSEVENT_RESTARTMSD	ON		
IVSEVENT_CONTROLLOCK	ON	ON	Stop T5 timer
IVSEVENT_ LLACKRECEIVED			Start T6 timer, stop T7 timer
IVSEVENT_ HLACKRECEIVED			Start TU timer, un-mute microphone and speaker at expiration, stop all timers.
IVSEVENT_ IDLEPOSTRESET			All timers stopped

Table 81: eIM handling of Microphone/loudspeaker switches. Call set-up notification event is externally available as +UCALLSTAT: 1,0 URC

Abnormal eCall transactions are handled by T5, T6 and T7 timers.

The purpose of TU timer is to keep the loudspeaker muted while HL-ACKs are received after the 2nd (recorded) HL-ACK. TU timer is not configurable through AT. The timer is 450 ms and is restarted after each recorded HL-ACK.

2. Voice resource mute/un-mute command
   This command mutes/un-mutes the microphone or loudspeaker (regardless of voice control configuration). It also provides the voice resource muted/un-muted state.
3. URC enabling - indications of a voice resource switch
   This command enables/disables URCs providing loudspeaker/microphone switching notifications.
4. Internal control points configuration
   This command enables/disables the internal control points MP0-MP6 for microphone and control points SP0-SP2 for loudspeaker switching operations.
5. HLAP timers status configuration
   This command enables/disables timers T5, T6 and T7.
6. HLAP timers value configuration
   This command configures expiry value of timers T5, T6 and T7.

34.3.2 Syntax

Type	Syntax	Response	Example
Generic syntax			
Set	AT+UECALLVOICE=<op_code>, <param1>,<param2>	OK	

Type	Syntax	Response	Example
Read	AT+UECALLVOICE=<op_code>,<param1>	+UECALLVOICE: <op_code>,<param1>,<param2> OK	
Internal voice control			
Set	AT+UECALLVOICE=1,<res_id>,<on_off_ctrl>	OK	AT+UECALLVOICE=1,0,1 OK
Read	AT+UECALLVOICE=1,<res_id>	+UECALLVOICE: 1,<res_id>,<on_off_ctrl> OK	AT+UECALLVOICE=1,0 +UECALLVOICE: 1,0,1 OK
Voice resource mute/un-mute			
Set	AT+UECALLVOICE=2,<res_id>,<mute_unmute>	OK	AT+UECALLVOICE=2,0,1 OK
Read	AT+UECALLVOICE=2,<res_id>	+UECALLVOICE: 2,<res_id>,<res_state> OK	AT+UECALLVOICE=2,0 +UECALLVOICE: 2,0,1 OK
URC enabling			
Set	AT+UECALLVOICE=3,<res_id>,<urc_state>	OK	AT+UECALLVOICE=3,1,0 OK
Read	AT+UECALLVOICE=3,<res_id>	+UECALLVOICE: 3,<res_id>,<urc_state> OK	AT+UECALLVOICE=3,1 +UECALLVOICE: 3,1,0 OK
Internal control points configuration			
Set	AT+UECALLVOICE=4,<res_id>,<resource_bitmask>	OK	AT+UECALLVOICE=4,1,15 OK
Read	AT+UECALLVOICE=4,<res_id>	+UECALLVOICE: 4,<res_id>,<resource_bitmask> OK	AT+UECALLVOICE=4,1 +UECALLVOICE: 4,1,15 OK
HLAP timers status configuration			
Set	AT+UECALLVOICE=5,<timer>,<timer_status>	OK	AT+UECALLVOICE=5,1,1 OK
Read	AT+UECALLVOICE=5,<timer>	+UECALLVOICE: 5,<timer>,<timer_status> OK	AT+UECALLVOICE=5,0 +UECALLVOICE: 5,0,1 OK
HLAP timers value configuration			
Set	AT+UECALLVOICE=6,<timer>,<timer_value>	OK	AT+UECALLVOICE=6,0,5000 OK
Read	AT+UECALLVOICE=6,<timer>	+UECALLVOICE: 6,<timer>,<timer_value> OK	AT+UECALLVOICE=6,0 +UECALLVOICE: 6,0,5000 OK
Prompt configuration			
Set	AT+UECALLVOICE=7,<prompt_configuration>	OK	AT+UECALLVOICE=7,1 OK
Test	AT+UECALLVOICE=?	+UECALLVOICE: (list of supported <op_code>s) OK	+UECALLVOICE: (1-6) OK
URC		+UUECALLVOICE: <res_id>,<res_state>	+UUECALLVOICE: 1,1

34.3.3 Defined values

Parameter	Type	Description
<op_code>	Number	Type of operation: • 1: enable/disable internal voice resource control (by eIM) • 2: mute/un-mute voice resource • 3: enable/disable/query URC generation for specific voice resource • 4: configure internal control points of a voice resource • 5: enable/disable timers T5, T6 and T7 • 6: configure timers T5, T6 and T7 • 7: configure prompts
<res_id>	Number	Voice resource identifier: • 0: microphone • 1: loudspeaker
<on_off_ctrl>	Number	Flag to enable or disable the eIM internal control of voice resource: • 0: disabled • 1 (factory-programmed value): enabled
<mute_unmute>	Number	Flag to mute or un-mute the voice resource. Allowed values: • 0: mute • 1: unmute
<urc_state>	Number	Flag to enable or disable URCs on voice resource status: • 0 (factory-programmed value): disabled (do not receive URCs when resource status changes) • 1: enabled (receive URCs when resource status changes)
<res_state>	Number	Voice resource state. Allowed values: • 0: muted (microphone / loudspeaker disconnected) • 1 (factory-programmed value): un-muted (microphone / loudspeaker connected)

<resource_bitmask>	Number	Bitmask representing the internal control points to be enabled. Allowed values:
		• For the microphone (<res_id>=0) the bitmask is composed by 7 bits.
		  o Bit #0 set: MP0 control point enabled (factory-programmed value: disabled)
		  o Bit #1 set: MP1 control point enabled (factory-programmed value: enabled)
		  o Bit #2 set: MP2 control point enabled (factory-programmed value: enabled)
		  o Bit #3 set: MP3 control point enabled (factory-programmed value: enabled)
		  o Bit #4 set: MP4 control point enabled (factory-programmed value: disabled)
		  o Bit #5 set: MP5 control point enabled (factory-programmed value: disabled)
		  o Bit #6 set: MP6 control point enabled (factory-programmed value: disabled)
		  Range: 0 to 127 (decimal format only). Factory-programmed value: 14
		• For the loudspeaker (<res_id>=1) the bitmask is composed by 4 bits.
		  o Bit #0 set: SP0 control point enabled (factory-programmed value: disabled)
		  o Bit #1 set: SP1 control point enabled (factory-programmed value: enabled)
		  o Bit #2 set: SP2 control point enabled (factory-programmed value: enabled)
		  o Bit #3 set: SP3 control point enabled (factory-programmed value: disabled)
		  Range: 0 to 15 (decimal format only). Factory-programmed value: 6

<timer>	Number	Timers: • 0: T5 timer • 1: T6 timer • 2: T7 timer
<timer_status>	Number	Configures the status of T5, T6 or T7 HLAP timers. Allowed values: • 0: timer disabled • 1 (factory-programmed value): timer enabled
<timer_value>	Number	Timer value expressed in milliseconds. The factory-programmed values are: • T5 timer: 5000 ms • T6 timer: 5000 ms • T7 timer: 20000 ms Range: 1000 to 60000 (decimal format only).
<prompt_configuration>	Number	Configures the prompt configuration. The allowed values are: • 0: prompts disabled • 1 (factory-programmed value): default system prompts • 2: custom defined prompts (see Prompts)

Parameter	Type	Description
<param1>	Number	Type and supported content depend on the related <op_code> parameter: • <op_code>=1: type is <res_id> • <op_code>=2: type is <res_id> • <op_code>=3: type is <res_id> • <op_code>=4: type is <res_id> • <op_code>=5: type is <timer> • <op_code>=6: type is <timer>
<param2>	Number	Type and supported content depend on the related <op_code> parameter: • <op_code>=1: type is <on_off_ctrl> • <op_code>=2: type is <mute_unmute> • <op_code>=3: type is <urc_state> • <op_code>=4: type is <resource_bitmask> • <op_code>=5: type is <timer_status> • <op_code>=6: type is <timer_value>

34.3.4 Notes

TOBY-L4

- <op_code>=1, 2, 5 and 6 are not supported.
- The internal voice control handling is not configurable.
- Prompt configuration and URC enabling are part of the Call controller configuration which is stored in the NVM. At the module boot, the eCall controller is configured according to stored values.
- The URC enabling is a global setting, so all clients will get the same events based on it.

SARA-U2 / LISA-U2 / SARA-G3 / LEON-G1

- <op_code>=7 is not supported.

SARA-U270-00S / LISA-U200-02S / LISA-U200-52S / LISA-U200-62S / LISA-U260 / LISA-U270 / LISA-U120 / LISA-U130 / SARA-G340-00S / SARA-G340-01S / SARA-G350-00S / SARA-G350-00X / SARA-G350-01B / SARA-G350-01S / LEON-G100-07S / LEON-G100-08S

- <op_code>=4, 5 and 6 are not supported.

34.3.5 Voice control internal handling

With voice control internal handling, the eIM performs the microphone and/or loudspeaker switches. Microphone and loudspeaker switches or loudspeaker un-muting timer start-up generally occur at IVS URC events (see the +UECALLDATA Defined Values), according to the Table 82:

Event / IVS event	Microphone mute	Microphone un-mute	Loudspeaker mute	Loudspeaker un-mute
Call setup notification	NCF		NCF,SP0	SP0: Start 5 s timer, un-mute at expiration
IVSEVENT_SENDINGSTART	MP0			
IVSEVENT_SENDINGMSD	MP1		SP1	
IVSEVENT_LLACKRECEIVED		MP2		
IVSEVENT_HLACKRECEIVED		MP3		SP2: Start TH timer, un-mute at expiration. Timer value is 1.2 s in fast modulation mode, 2.4 s in robust modulation mode
IVSEVENT_IDLEPOSTRESET		MP4		SP3
IVSEVENT_IDLEPOSTSTART		MP5		
eIM transmitter interrupts the INITIATION signal since sync has been detected (internal event)		MP6		

Table 82: eIM handling of Microphone/loudspeaker switches. Call set-up notification event is externally available as +UCALLSTAT: 1,0 URC

☞ Microphone switches are performed within high-priority 3GPP eIM execution thread.

☞ The purpose of SP2 - TH timer is to keep, during a normal eCall transaction, the loudspeaker muted for the duration of 3 HL-ACKs that are received after the 2nd (recorded) HL-ACK. TH timer is not configurable through AT.

☞ SP0 5 s timer un-mutes only the loudspeaker, while the programmable T5 timer reconnects both the microphone and loudspeaker.

34.3.6 Prompts

TOBY-L4

When prompts are enabled (factory or custom prompts configuration - using AT+UECALLSTAT=7, four different prompts are supported:

- **ecall_prompt_dialing.pcm**: the dialing prompt starts playing on dialling indication,
- **ecall_prompt_msd_sending.pcm**: the start sending MSD prompt starts playing when START message is received from PSAP,
- **ecall_prompt_call_end.pcm**: the call disconnect prompt starts playing on disconnect indication,
- **ecall_prompt_call_incoming.pcm**: the incoming call prompt starts playing on an incoming call.

Prompts can be downloaded to the module using the +UDWNFILE AT command and deleted using the +UDELFILE AT command. Both AT commands use the "ECALL_EXT" tag (for details, see File tags).

☞ When downloading or deleting prompts, use the exact file name (i.e. "ecall_prompt_dialing.pcm") or the prompt will not be accepted.

☞ If custom prompts are configured and prompts are missing, factory-programmed prompts will be used.

The prompt configuration is part of the eCall controller configuration which is stored in the NVM. At the module boot, the eCall controller is configured according to stored values.

Prompts have to be in following audio format:

- PCM raw (without header),
- Single channel (mono),
- 16 kHz sample rate,
- Signed 16-bit little-endian encoding.

☞ If a wrong audio format is set, distorted prompts will be heard.

☞ Configuration of the prompts should not be done between an ongoing call as that will result in unexpected behaviour.

34.4 eCall configuration +UECALLSTAT

+UECALLSTAT						
Modules	TOBY-L4106					
	SARA-U201 SARA-U270 LISA-U200-02S LISA-U200-03S LISA-U200-52S LISA-U200-62S LISA-U200-83S LISA-U201 LISA-U260-02S LISA-U270-02S LISA-U270-62S LISA-U270-63S LISA-U270-68S LISA-U120 LISA-U130					
	SARA-G340 SARA-G350 SARA-G350-53S LEON-G100-07S LEON-G100-08S					
Attributes	**Syntax**	**PIN required**	**Settings saved**	**Can be aborted**	**Response time**	**Error reference**
	partial	Yes	No	No	-	+CME Error

34.4.1 Description

☞ LISA-U120 / LISA-U130
The command is supported with partial functionality and a limited range for testing purposes only.

According to EN 16062 [72], eCall configuration of an eCall-enabled IVS must automatically be read from a valid SIM/USIM that supports the provision of the eCall service (i.e. valid eCall USIM, according to 3GPP TS 31.102 [19]).

The eCall-enabled SIM can be configured only for eCall (referred in EN 16062 [72] as "eCall only"), or a combination of eCall and commercial service provision (referred in 3GPP TS 26.267 [73] as "eCall without

registration restrictions"). In particular, an IVS NAD configured in eCall only mode boots up with network registration restriction, i.e. the IVS NAD does not perform the standard mobility management procedures.

☞ In case IVS NAD is configured as eCall only, the MS class is implicitly set to GSM only, i.e. no GPRS service is available by default.

This command serves to:

- Read the eCall configuration from the SIM
- Force the module with a not valid eCall SIM configuration to eCall only or eCall without registration restriction (for testing purposes)

Forcing a valid eCall SIM to a different eCall state, the module returns the final result code +CME ERROR: 3 (Operation not allowed).

Enabling and disabling eCall only mode with registration restriction (also by restoring SIM settings) can only be performed if the module is unregistered.

☞ If the module does not support the +CECALL AT command, the state switches can only be performed if the module is not registered on the network.

34.4.2 Syntax

Type	Syntax	Response	Example
Set	AT+UECALLSTAT=<cmd>	OK	
Read	AT+UECALLSTAT?	+UECALLSTAT: <state> OK	+UECALLSTAT: 1 OK
Test	AT+UECALLSTAT=?	+UECALLSTAT: (list of supported <cmd>s) OK	+UECALLSTAT: (0-3) OK

34.4.3 Defined values

Parameter	Type	Description
<cmd>	Number	• 0: force to not valid eCall SIM (not eCall-enabled) • 1: force eCall only with registration restriction • 2: force eCall without registration restriction • 3: restore SIM/USIM settings (read from SIM)
<state>	Number	• 0: not valid eCall SIM present (not eCall-enabled) • 1: eCall only with registration restriction • 2: eCall without registration restriction

34.4.4 Notes

TOBY-L4

- <cmd>=0 and 2 are not supported.

34.5 eCall and InBM test configuration +UDCONF=90

+UDCONF=90						
Modules	TOBY-L4106					
	SARA-U201 SARA-U270 LISA-U200-03S LISA-U200-83S LISA-U201					
	SARA-G340-02S SARA-G340-02X SARA-G350-02A SARA-G350-02S SARA-G350-02X SARA-G350-53S LEON-G100-07S LEON-G100-08S					
Attributes	**Syntax**	**PIN required**	**Settings saved**	**Can be aborted**	**Response time**	**Error reference**
	partial	No	NVM	No	-	+CME Error

34.5.1 Description

Configures some eCall parameters. It is available in eCall Release 3 and sets the following functionalities:

- eCall test number
- eCall reconfiguration number

- Factory-programmed T3242 timer duration
- Factory-programmed T3243 timer duration

☞ eCall settings cannot be stored to NVM to prevent fake SIM usage.

34.5.2 Syntax

Type	Syntax	Response	Example
eCall generic syntax			
Set	AT+UDCONF=90,<op_code>,<param1>[,<number>]	OK	
Read	AT+UDCONF=90,<op_code>	AT+UDCONF: 90,<op_code>,<param1>[,<number>] OK	
eCall test number			
Set	AT+UDCONF=90,1,<ToN>,<number>	OK	AT+UDCONF=90,1,129,"02338456" OK
Read	AT+UDCONF=90,1	+UDCONF: 90,1,<ToN>,<number> OK	AT+UDCONF=90,1 +UDCONF: 90,1,129,"1234" OK
eCall reconfiguration number			
Set	AT+UDCONF=90,2,<ToN>,<number>	OK	AT+UDCONF=90,2,129,"1234" OK
Read	AT+UDCONF=90,2	+UDCONF: 90,2,<ToN>,<number> OK	AT+UDCONF=90,2 +UDCONF: 90,2,129,"1234" OK
eCall T3242 timer duration			
Set	AT+UDCONF=90,11,<timer_duration>	OK	AT+UDCONF=90,11,43200 OK
Read	AT+UDCONF=90,11	+UDCONF: 90,11,<timer_duration> OK	AT+UDCONF=90,11 +UDCONF: 90,11,43200 OK
eCall T3243 timer duration			
Set	AT+UDCONF=90,12,<timer_duration>	OK	AT+UDCONF=90,12,43200 OK
Read	AT+UDCONF=90,12	+UDCONF: 90,12,<timer_duration> OK	AT+UDCONF=90,12 +UDCONF: 90,12,43200 OK

34.5.3 Defined values

Parameter	Type	Description
<op_code>	Number	Class of eCall/IBM parameter (values lower than 10 corresponds to the USIM settings, NAD settings otherwise). Allowed values: • 1: eCall test number • 2: eCall reconfiguration number • 11: T3242 timer duration • 12: T3243 timer duration
<ToN>	Number	Specifies the type of address octet <ToN>: • 145: international number, i.e. when dialling string starts with '+' • 129: national coded number, otherwise
<number>	String	eCall Test or Reconfiguration number. • Number in string format <number>. The default value is "".
<timer_duration>	Number	Specifies the 32-bit timer duration defined in seconds. The value 0 is not supported. The default value is 43200 (12 hours)

Parameter	Type	Description
<param1>	Number	Type and supported content depend on the related <op_code> parameter; see the <op_code> specification

34.5.4 Notes

- If it is not specified with the set command, Test and Reconfiguration numbers are retrieved from FDN or SDN entries, if the USIM is a valid eCall enabled USIM
- If it is specified with the set command, <number> overwrites the USIM eCall Test or Reconfiguration number retrieved from FDN or SDN entries, if any
- If <ToN>= 145, the number specified with <number> shall start with "+"

SARA-G3

- The test command is not supported.

LEON-G1

- The test command is not supported.

34.6 eCall type +UECALLTYPE

+UECALLTYPE						
Modules	SARA-U201 SARA-U270 LISA-U200-02S LISA-U200-03S LISA-U200-52S LISA-U200-62S LISA-U200-83S LISA-U201 LISA-U260-02S LISA-U270-02S LISA-U270-62S LISA-U270-63S LISA-U270-68S LISA-U120 LISA-U130					
	SARA-G340 SARA-G350 SARA-G350-53S LEON-G100-07S LEON-G100-08S					
Attributes	**Syntax**	**PIN required**	**Settings saved**	**Can be aborted**	**Response time**	**Error reference**
	full	No	No	No	-	+CME Error

34.6.1 Description

Sets the emergency call service category, i.e. the "eCall flag". According to ETSI TS 122 101 [71] and 3GPP TS 24.008 [12], an eCall can be either Manually Initiated (MIeC, Manually Initiated eCall) or Automatically Initiated (AIeC, Automatically Initiated eCall), which is configured through specific eCall flag bits. If none of such bits is set, the Mobile Switching Centre (MSC) supporting eCall functionality will operate a speech-only TS12 emergency call.

The "eCall flag" is included in the call set-up message whenever the emergency number is dialed (with "ATD112;").

This command also configures the system to perform Test or Reconfiguration eCalls, according to 3GPP TS 51.010-1 [74], section 26.9.6a. When performing "ATD112;", the Test or Reconfiguration numbers read from the eCall Test USIM/SIM will be respectively dialed.

The default eCall type (<type_of_eCall>=0) cannot be changed if the USIM is not eCall enabled or if the eCall status has not been forced to eCall enabled via AT+UECALLSTAT command.

The combination of +UECALLTYPE set command and ATD112; trigges an eCall to the network, and functionally complies with the 3GPP eCall initiation command +CECALL.

If the eCall is disabled (see the +UECALLSTAT command), the set command returns the error result code +CME ERROR: 3 (Operation not allowed).

☞ If the module supports +CECALL AT command, the +UECALLTYPE is set to zero after the eCall of the selected type has been released. This reduces the possibility that eCalls are originated accidentally.

☞ If the module supports +CECALL AT command, the set command with <type_of_eCall> 3 or 4 returns the error result code +CME ERROR: 1806 if test or reconfiguration numbers are not available or not properly encoded.

34.6.2 Syntax

Type	Syntax	Response	Example
Set	AT+UECALLTYPE=<type_of_eCall>	OK	
Read	AT+UECALLTYPE?	+UECALLTYPE: <type_of_eCall>	+UECALLTYPE: 1

Type	Syntax	Response	Example
		OK	OK
Test	AT+UECALLTYPE=?	+UECALLTYPE: (list of supported <type_of_eCall>s) OK	+UECALLTYPE: (0-4) OK

34.6.3 Defined values

Parameter	Type	Description
<type_of_eCall>	Number	• 0 (factory-programmed value): speech only TS12 • 1: Emergency Service Category Value (MIeC) (octet 3) Bit 6=1 • 2: Emergency Service Category Value (AIeC) (octet 3) Bit 7=1 • 3: Test eCall; use eCall Test number • 4: Reconfiguration eCall; use eCall Reconfiguration number

34.6.4 Notes

LISA-U120 / LISA-U130

- The command is supported with partial functionality and a limited range for testing purposes only.

34.7 Initiate eCall +CECALL

+CECALL						
Modules	TOBY-L4106					
	SARA-U201 SARA-U270 LISA-U200-03S LISA-U200-83S LISA-U201					
	SARA-G340-02S SARA-G340-02X SARA-G350-02A SARA-G350-02S SARA-G350-02X SARA-G350-53S LEON-G1					
Attributes	**Syntax**	**PIN required**	**Settings saved**	**Can be aborted**	**Response time**	**Error reference**
	full	No	No	No	-	+CME Error

34.7.1 Description

According to ETSI TS 127 007 [83], the set command triggers an eCall to the network. Based on the configuration selected, it can be used to either trigger a test call, a reconfiguration call, a manually initiated eCall or an automatically initiated eCall.

The read command returns the type of eCall currently in progress, if any. If an eCall is not in progress, the read command returns the error result code +CME ERROR: 3 (Operation not allowed).

The test command returns the supported values and ranges.

The command behavior depends on whether a valid eCall USIM is used or not.

- Valid eCall USIM: the command fails when the test/reconfiguration calls are started and there is no valid test/reconfiguration number on the eCall USIM. The +UDCONF=90 command can overwrite the test/reconfiguration numbers values read from the USIM (see +UDCONF=90, eCall/InBM test configuration). The +UDCONF=90 values are volatile: they are lost at next power on or reset.
- Not Valid eCall USIM: starting an eCall via +CECALL AT command with a not eCall USIM is possible, provided that the eCall status has been enabled via +UECALLSTAT AT command. In addition, the test and reconfiguration numbers should be provided through +UDCONF=90 command. Otherwise, +CECALL AT command fails if a test/reconfiguration call is started.

34.7.2 Syntax

Type	Syntax	Response	Example
Set	AT+CECALL=<type_of_eCall>	OK	AT+CECALL=1 OK
Read	AT+CECALL?	+CECALL: <type_of_eCall> OK	+CECALL: 1 OK
Test	AT+CECALL=?	+CECALL: (list of supported <type_of_eCall>s)	+CECALL: (0-3) OK

Type	Syntax	Response	Example
		OK	

34.7.3 Defined values

Parameter	Type	Description
<type_of_eCall>	Number	• 0: test call • 1: reconfiguration call • 2: manually initiated eCall (MIeC) • 3: automatically initiated eCall (AIeC)

34.7.4 Notes

- The set command is functionally equivalent to the combination of +UECALLTYPE and ATD112.
- The set command with <type_of_eCall> 0 or 1 returns the error result code +CME ERROR: 1806 if test or reconfiguration numbers are not available or not properly encoded.

34.8 eCall audio path mode setting +UECALLCFG

+UECALLCFG						
Modules	TOBY-L4106					
Attributes	**Syntax**	**PIN required**	**Settings saved**	**Can be aborted**	**Response time**	**Error reference**
	full	No	NVM	No	-	+CME Error

34.8.1 Description

Sets the audio path and profile used for eCall sessions. The audio path and profile switch is done automatically when eCall starts. On eCall session end, the audio path and profile are restored. The setting is stored in NVM so it can only be done once.

☞ When eCall session is active +USPM command will not show correct information and should not be used.

When the In-Band Modem is enabled by the +UECALLDATA AT command the eCall session becomes active. The eCall session is active until the In-Band Modem is aborted (either manually using the +UECALLDATA AT command or on T9 HLAP timer expiry).

The parameters and behaviour of the command for the audio path configuration are the same as for the +USPM AT command.

34.8.2 Syntax

Type	Syntax	Response	Example
Generic syntax			
Set	AT+UECALLCFG=<op_code>,<param1>,<param2>	OK	
Read	AT+UECALLCFG=<op_code>	+UECALLCFG: <op_code>,<param1>,<param2> OK	
Path configuration			
Set	AT+UECALLCFG="path",<audio_path>,<profile_type>	OK	AT+UECALLCFG="path",0,1 OK
Read	AT+UECALLCFG="path"	+UECALLCFG: "path",<audio_path>,<profile_type> OK	AT+UECALLCFG="path" +UECALLCFG: "path",0,1 OK
Test	AT+UECALLCFG=?	+UECALLCFG: (list of supported <op_code>s) OK	+UECALLCFG: ("path") OK

34.8.3 Defined values

Parameter	Type	Description
<op_code>	String	Type of operation: • "path": set the eCall configuration path
<audio_path>	Number	Specifies the audio path used for an eCall session: • 0 (factory-programmed and default value): analog audio path • 1: digital audio path
<profile_type>	Number	Specifies the profile for the selected audio path: • 0 (factory-programmed and default value): headset profile • 1: hands-free profile • 2: flat profile • 3: custom 0 profile • 4: custom 1 profile
<param1>	Number	Type and supported content depend on the related <op_code> parameter: • <op_code>=path: type is <audio_path>
<param2>	Number	Type and supported content depend on the related <op_code> parameter: • <op_code>=path: type is <profile_type>

35 I²C

35.1 Introduction

The I²C AT commands support communication with more than one connected device via one of the controllers, but require opening and closing a logical channel for each connected device. Only one logical channel at a time can be opened.

☞ The availability and hardware description of the I²C interfaces are out of the scope of this document and are described in a separate document. Refer to the corresponding module System Integration Manual.

The procedure for communicating with two different devices is:

- Open the logical channel for device1 (with AT+UI2CO)
- Read/write to/from device1 (with AT+UI2CR, AT+UI2CW and +UI2CREGR)
- Close the logical channel for device1 (with AT+UI2CC)
- Open the logical channel for device2 (with AT+UI2CO)
- Read/write to/from device2 (with AT+UI2CR, AT+UI2CW and +UI2CREGR)
- Close the logical channel for device2 (with AT+UI2CC)

Once the controller has been configured, it is possible to start I²C communication (read/write) with I²C slave peripherals.

☞ The I²C controllers available on the u-blox cellular modules module work only in Master Mode so they can be connected to slave devices only.

☞ In case of a controller/device malfunction, the command's response is only "ERROR".

35.2 I²C open logical channel +UI2CO

+UI2CO						
Modules	TOBY-L4006 TOBY-L4106 TOBY-L4206 TOBY-L4906-01A TOBY-L4906-51A TOBY-L200-02S TOBY-L200-03A TOBY-L200-03S TOBY-L210-02S TOBY-L210-03A TOBY-L210-03S TOBY-L210-62S TOBY-L220 TOBY-L280					
	LARA-R2 TOBY-R2					
	SARA-U2 LISA-U200-01S LISA-U200-02S LISA-U200-03S LISA-U200-52S LISA-U200-62S LISA-U200-83S LISA-U201 LISA-U230 LISA-U260 LISA-U270					
Attributes	**Syntax**	**PIN required**	**Settings saved**	**Can be aborted**	**Response time**	**Error reference**
	full	No	No	No	-	+CME Error

35.2.1 Description

Changes the hardware and logical configuration of the selected I²C controller.

It is only possible to configure the I²C controller in Master Mode.

This command selects:

- The controller available in the u-blox cellular module
- The bus mode type
- The bit rate
- The address size (7-10 bit address)
- The slave device address

Once the selected controller has been configured, a logical channel between it and the selected slave device is set up and there is no need to further specify it. All the following I²C write, read and close commands refer to the currently opened logical channel. It is not possible to use the I²C write, read and open commands for writing or reading to/from a different slave device without first closing the I²C logical channel.

35.2.2 Syntax

Type	Syntax	Response	Example
Set	AT+UI2CO=<I2C_controller_number>,<bus_mode>,<bit_rate>,<device_address>,<address_width>	OK	AT+UI2CO=1,0,0,0x42,0 OK
Test	AT+UI2CO=?	+UI2CO: (list of supported <I2C_controller_number>s),(list of supported <bus_mode>s),(list of supported <bit_rate>),(<device_address> range),(list of supported <address_width>s) OK	+UI2CO: (1),(0-1),(0-1),(0x000-0x3FF),(0-1) OK

35.2.3 Defined values

Parameter	Type	Description
<I2C_controller_number>	Number	I^2C HW controller to use: • 1: controller 1
<bus_mode>	Number	I^2C bus mode type: • 0: Bus Mode Standard (0 - 100 kbaud) • 1: Bus Mode Fast (0 - 400 kbaud)
<bit_rate>	Number	I^2C bit rate: • 0: 100 kb/s • 1: 400 kb/s
<device_address>	Hex Number	Device address in HEX format
<address_width>	Number	I^2C size of the controller address: • 0: 7 bit address • 1: 10 bit address

35.2.4 Notes

SARA-U201-04A / SARA-U201-04B / SARA-U201-04X / SARA-U270-04B

- In case the AUX UART is enabled (that is the active +USIO variant is 4,5 or 6), since the I^2C lines are not available, the command immediately provides an error result code in case of <mode> set to 1 ("+CME ERROR: 3" if +CMEE=1 or "+CME ERROR: operation not allowed" if +CMEE=2)

35.3 I^2C write to peripheral +UI2CW

+UI2CW						
Modules	TOBY-L4006 TOBY-L4106 TOBY-L4206 TOBY-L4906-01A TOBY-L4906-51A TOBY-L200-02S TOBY-L200-03A TOBY-L200-03S TOBY-L210-02S TOBY-L210-03A TOBY-L210-03S TOBY-L210-62S TOBY-L220 TOBY-L280					
	LARA-R2 TOBY-R2					
	SARA-U2 LISA-U200-01S LISA-U200-02S LISA-U200-03S LISA-U200-52S LISA-U200-62S LISA-U200-83S LISA-U201 LISA-U230 LISA-U260 LISA-U270					
Attributes	**Syntax**	**PIN required**	**Settings saved**	**Can be aborted**	**Response time**	**Error reference**
	full	No	No	No	-	+CME Error

35.3.1 Description

Writes the HEX data to the I^2C slave device of the current logical channel. The HEX data formats are without 0x prefix (see example).

35.3.2 Syntax

Type	Syntax	Response	Example
Set	AT+UI2CW=<hex_data>,<nof_byte_to_write>	OK	AT+UI2CW="0011AABBCCDDEEFF",8 OK

Type	Syntax	Response	Example
Test	AT+UI2CW=?	+UI2CW: (byte to write),(range of supported <nof_byte_to_write>) OK	+UI2CW: "data", (1-100) OK

35.3.3 Defined values

Parameter	Type	Description
<hex_data>	String	Hex data sequence without prefix 0x, enclosed in double quotes, to be written to the I^2C slave device
<nof_bytes_to_write>	Number	Number of byte to write to the slave I^2C device. Range: 1-100

35.4 I^2C read from peripheral +UI2CR

+UI2CR						
Modules	TOBY-L4006 TOBY-L4106 TOBY-L4206 TOBY-L4906-01A TOBY-L4906-51A TOBY-L200-02S TOBY-L200-03A TOBY-L200-03S TOBY-L210-02S TOBY-L210-03A TOBY-L210-03S TOBY-L210-62S TOBY-L220 TOBY-L280					
	LARA-R2 TOBY-R2					
	SARA-U2 LISA-U200-01S LISA-U200-02S LISA-U200-03S LISA-U200-52S LISA-U200-62S LISA-U200-83S LISA-U201 LISA-U230 LISA-U260 LISA-U270					
Attributes	**Syntax**	**PIN required**	**Settings saved**	**Can be aborted**	**Response time**	**Error reference**
	full	No	No	No	-	+CME Error

35.4.1 Description

Reads <nof_bytes_to_read> of data from the I^2C slave device of the current logical channel and prints them in HEX format in separate rows.

35.4.2 Syntax

Type	Syntax	Response	Example
Read	AT+UI2CR=<nof_bytes_to_read>	+UI2CR: <index_1>: <byte_1> [+UI2CR: <index_n>: <byte_n> [..]] OK	AT+UI2CR=3 +UI2CR: 0: 0xA3 +UI2CR: 1: 0x0F +UI2CR: 2: 0xDB OK
Test	AT+UI2CR=?	+UI2CR: (list of supported <nof_byte_to_read>s) OK	+UI2CR: (1-100) OK

35.4.3 Defined values

Parameter	Type	Description
<nof_bytes_to_read>	Number	Number of bytes to read from the slave I^2C device: • TOBY-L2 / LARA-R2 / TOBY-R2 / SARA-U2 / LISA-U2 - The range goes from 1 to 100.
<index1>,...,<index_n>	Number	Index of the byte being printed.
<byte_1>,...,<byte_n>	Number	n-th byte of the data, in hex mode (unquoted, prefixed by 0x).

35.5 I²C read from peripheral register +UI2CREGR

+UI2CREGR						
Modules	TOBY-L4006 TOBY-L4106 TOBY-L4206 TOBY-L4906-01A TOBY-L4906-51A TOBY-L200-02S TOBY-L200-03A TOBY-L200-03S TOBY-L210-02S TOBY-L210-03A TOBY-L210-03S TOBY-L210-62S TOBY-L220 TOBY-L280					
	LARA-R2 TOBY-R2					
	SARA-U2 LISA-U200-01S LISA-U200-02S LISA-U200-03S LISA-U200-52S LISA-U200-62S LISA-U200-83S LISA-U201 LISA-U230 LISA-U260 LISA-U270					
Attributes	**Syntax**	**PIN required**	**Settings saved**	**Can be aborted**	**Response time**	**Error reference**
	full	No	No	No	-	+CME Error

35.5.1 Description

Reads <nof_bytes_to_read> of data from the slave register of the I²C slave device of the current logical channel and prints them in HEX format in separate rows.

35.5.2 Syntax

Type	Syntax	Response	Example
Read	AT+UI2CREGR=<register_address>,<nof_bytes_to_read>	+UI2CREGR: <index_1>: <byte_1> [+UI2CREGR: <index_n>: <byte_n> [..]] OK	AT+UI2CREGR=0x42,3 +UI2CREGR: 0: 0xA3 +UI2CREGR: 1: 0x0F +UI2CREGR: 2: 0xDB OK
Test	AT+UI2CREGR=?	+UI2CREGR: (list of supported <register_address>s),(list of supported <nof_bytes_to_read>s) OK	+UI2CREGR: (0x00-0xFF),(1-100) OK

35.5.3 Defined values

Parameter	Type	Description
<register_address>	Number	Device address in HEX format
<nof_bytes_to_read>	Number	Number of bytes to read from the slave I²C register. The range goes from 1 to 100.
<index1>,...,<index_n>	Number	Index of the byte being printed.
<byte_1>,...,<byte_n>	Number	n-th byte of the data, in hex mode (unquoted, prefixed by 0x).

35.6 I²C close logical channel +UI2CC

+UI2CC						
Modules	TOBY-L4006 TOBY-L4106 TOBY-L4206 TOBY-L4906-01A TOBY-L4906-51A TOBY-L200-02S TOBY-L200-03A TOBY-L200-03S TOBY-L210-02S TOBY-L210-03A TOBY-L210-03S TOBY-L210-62S TOBY-L220 TOBY-L280					
	LARA-R2 TOBY-R2					
	SARA-U2 LISA-U200-01S LISA-U200-02S LISA-U200-03S LISA-U200-52S LISA-U200-62S LISA-U200-83S LISA-U201 LISA-U230 LISA-U260 LISA-U270					
Attributes	**Syntax**	**PIN required**	**Settings saved**	**Can be aborted**	**Response time**	**Error reference**
	full	No	No	No	-	+CME Error

35.6.1 Description

Closes the I²C logical channel being used.

☞ The logical channel must be closed before opening a new one.

35.6.2 Syntax

Type	Syntax	Response	Example
Action	AT+UI2CC	OK	AT+UI2CC OK
Test	AT+UI2CC=?	OK	OK

36 SAP

36.1 Introduction

The SIM Access Profile (SAP) allows communication between a device electrically connected to a SIM module (SAP Server) and a device using that SIM (SAP Client). The SAP details are specified in the Bluetooth Specification "SIM Access Profile - Interoperability Specification" [67].

u-blox modules support SAP client functionalities using a serial connection to transport the SAP messages defined in the SAP specification: in SAP Client mode, the u-blox cellular module uses a remote SIM, which is physically present in the SAP server, to perform all SIM-related operations; the local SIM card, directly connected to the module (U)SIM interface, is not accessed.

At power on SAP is disabled in the u-blox cellular module i.e. the local SIM card (directly connected to the module (U)SIM interface) is used. It is possible to enter SAP client mode and switch to using a remote SIM via AT commands. At any time, either the local or remote SIM is exclusively used; this is transparent to AT clients: for example when interrogating the IMSI with +CIMI, the result always refers to the "current" SIM: the local SIM's IMSI if SAP is not active or the remote SIM's IMSI if SAP Client mode is active.

URCs are provided to inform the user about the state of both local and remote SIM when SAP mode is active:

- The +UUSAPREMOTE URC reports information related to the "remote" SIM
- The +UUSAPLOCAL URC reports information related to the local SIM card directly connected to the module (U)SIM interface

For more details see Chapter 36.3.

Table 83 shows which indications are to be expected in case of local or remote SIM events (hot removal/insertion):

Event	SAP client not active	SAP client active
Local SIM removal/insertion	+CIEV: 12,<value>	+UUSAPLOCAL: <sim_present>
Remote SIM removal/insertion	-	+UUSAPREMOTE: <sim_present>

Table 83: SIM indications and SAP

For further details about SAP implementation, see the corresponding module system integration manual.

☞ u-blox cellular modules do not act as SAP server.

36.2 SAP mode activation +USAPMODE

+USAPMODE						
Modules	TOBY-L200-03A TOBY-L200-03S TOBY-L210-03A TOBY-L210-03S TOBY-L280-03A TOBY-L280-03S MPCI-L200-03S MPCI-L210-03S MPCI-L280-03S					
	SARA-U2 LISA-U200-01S LISA-U200-02S LISA-U200-03S LISA-U200-52S LISA-U200-62S LISA-U200-83S LISA-U201 LISA-U230 LISA-U260 LISA-U270					
Attributes	**Syntax**	**PIN required**	**Settings saved**	**Can be aborted**	**Response time**	**Error reference**
	full	No	No	No	-	+CME Error

36.2.1 Description

Configures the SAP connection mode:

- Local SIM: the local SIM is used, the SAP is not active
- SAP client: the module acts as an SAP client, a remote SIM is used

It is not possible to change the SAP mode during a call or with an active PDP context.

When entering the SAP client mode, the SAP communication takes place in a separate dedicated serial channel, according to the <format> indication (currently only binary mode is supported).

The command can only be invoked from a USB or a MUX AT channel.

When invoked from a USB channel, the dedicated serial channel for SAP is USB channel.

When invoked from a MUX channel, the dedicated serial channel for SAP is MUX channel.

☞ TOBY-L2 / MPCI-L2
The SAP MUX channel is not available.
The SAP client mode can be activated only if the AT+UUSBCONF configuration is set to 0, 12 or 13.

The communication between SAP client and server follows the "Connect" procedure (as specified by SAP specification [67]), which uses the <beacon> parameter.

The actual switch between local and remote SIM takes place only when a connection has been established between SAP client and the SAP server. The value of the SAP mode returned by the read command does not change as long as the connection is active.

The SAP client mode terminates when:
- The SAP connection fails (communication lost, unrecoverable error, unsuccessful connect negotiation)
- The SAP server commands a disconnection
- The AT command to move back to local SIM mode is received

The SAP client mode activation may result in an error result code if an SAP connection cannot be established. See the Appendix A.1 for the allowed error result codes.

36.2.2 Syntax

Type	Syntax	Response	Example
Set	AT+USAPMODE=<sap_mode>[,<format>[,<beacon>]]	OK	AT+USAPMODE=0 OK
			AT+USAPMODE=1,0,6 OK
Read	AT+USAPMODE?	+USAPMODE: <sap_mode> OK	+USAPMODE: 0 OK
Test	AT+USAPMODE=?	+USAPMODE: (list of supported <sap_mode>s),(list of supported <format>s),(list of supported <beacon>s) OK	+USAPMODE: (0,1),0,(0-65535) OK

36.2.3 Defined values

Parameter	Type	Description
<sap_mode>	Number	Specifies the SAP mode. Allowed values: • 0 (default value): internal SIM (SAP disabled) • 1: SAP client
<format>	Number	Specifies the SAP communication format. This parameter can be set only if <sap_mode> is 1 or 2. Allowed values: • 0 (default value): binary; SAP messages are exchanged transparently in binary format
<beacon>	Number	Period in seconds between consecutive CONNECT_REQ messages during the "Connect" procedure. This parameter can be set only if <sap_mode>= 1. 0 means one shot sending. The default value is 6 s. The allowed range is [0-65535].

36.2.4 Notes

TOBY-L200-03A / TOBY-L200-03S / TOBY-L210-03A / TOBY-L210-03S / TOBY-L280-03A / TOBY-L280-03S / MPCI-L200-03S / MPCI-L210-03S / MPCI-L280-03S

- The AT+CFUN=15 command issued in the SAP client mode (+USAPMODE: 1) will disable the remote SIM connection and restart the protocol stack on the local SIM card.
- The AT+CFUN=19 command shall not be issued in the SAP client mode (+USAPMODE: 1); the command can be used in the local SIM mode (+USAPMODE: 0) only.
- The SAP client mode shall not be activated if the local SIM card has been disabled (i.e. in +CFUN: 19).

SARA-U2 / LISA-U2

- The AT+CFUN=15 command shall not be issued in the SAP client mode (+USAPMODE: 1).

36.3 SAP mode indications +USAPIND

+USAPIND						
Modules	TOBY-L200-03A TOBY-L200-03S TOBY-L210-03A TOBY-L210-03S TOBY-L280-03A TOBY-L280-03S MPCI-L200-03S MPCI-L210-03S MPCI-L280-03S					
	SARA-U2 LISA-U200-01S LISA-U200-02S LISA-U200-03S LISA-U200-52S LISA-U200-62S LISA-U200-83S LISA-U201 LISA-U230 LISA-U260 LISA-U270					
Attributes	**Syntax**	**PIN required**	**Settings saved**	**Can be aborted**	**Response time**	**Error reference**
	full	No	No	No	-	+CME Error

36.3.1 Description

Enables or disables the URCs generation for the SAP mode status change indication (+UUSAPMODE) and the detection of a local SIM (+UUSAPLOCAL) when SAP client is active.

At the module power-up, the URCs are disabled.

36.3.2 Syntax

Type	Syntax	Response	Example
Set	AT+USAPIND=<ind_mode>	OK	AT+USAPIND=0 OK
Read	AT+USAPIND?	+USAPIND: <ind_mode> OK	+USAPIND: 0 OK
Test	AT+USAPIND=?	+USAPIND: (list of supported <ind_mode>s) OK	+USAPIND: (0,1) OK
URC		+UUSAPMODE: <sap_mode>	+UUSAPMODE: 0
URC		+UUSAPLOCAL: <sim_present>	+UUSAPLOCAL: 0

36.3.3 Defined values

Parameter	Type	Description
<ind_mode>	Number	Specifies whether SAP-related URCs are enabled or disabled. Allowed values: • 0 (default value): disabled • 1: enabled
<sap_mode>	Number	Specifies which SAP mode is currently used. Allowed values: • 0 (default value): internal SIM (SAP disabled) • 1: SAP client • 2: SAP server
<sim_present>	Number	Specifies the status of locally attached SIM. Allowed values: • 0: local SIM is present • 1: local SIM is not present

36.3.4 Notes

- The +UUSAPMODE: 0 URC is issued in case of a disconnection between SAP client and server. After any request if no response is received within 15 s, the SAP client is closed, the +UUSAPMODE: 0 URC is issued and the module switches to the local SIM.

37 Networking

37.1 Introduction

37.1.1 Parameter definitions

37.1.1.1 <networking_mode> = Router

The IP termination of each packet data context is on the module, which acts as a router. The DTE will send its packet to the module which will then use its routing table to perform the routing of the packet over the right context.

37.1.1.1.1 IPv4

- The DTE will configure its DHCP client over its virtual Ethernet interface and it will assign a private IP and DNS configuration. No public IP address is assigned
- The DTE will access the packet data network using the NAT procedure
- For each active packet data context the module creates an internal IP interface
- In case of multiple packet data contexts (each with an assigned IP address), the module will apply the following routing rules by checking destination IP address of each uplink packet:
  - If the address belongs to the IP subnet of one of the active contexts, then the packet will be sent over that link
  - In all other cases, the packet will be sent over the context which has been activated first (i.e. the default gateway)

☞ In case of multiple contexts the first activated context should be the one associated to the public Internet.

37.1.1.1.2 IPv6

☞ TOBY-L201 / MPCI-L201
The IPv6 in router mode is supported only in Verizon configuration. In this configuration only one data default bearer with IPv6 addressing is supported. See +UMNOCONF for further details.

☞ TOBY-L4
IPv6 is not supported.

In general terms, the global connectivity configuration of the network node shall be performed automatically by the IPv6 network through the use of IPv6 Neighbor Discovery Protocol (NDP).

If the mobile network supports the IPv6 auto-configuration then the following steps are performed:

- The Router Advertisement (RA) sent from the mobile network is forwarded to the USB virtual Ethernet interface of the DTE. The Router Advertisement holds the prefix of the activated default bearer.
- The DTE processes the RA message and configures its global address and its routing rules. If the procedure is correctly completed then the host is provided with a global IPv6 address and with the IPv6 address (global or local) of the next-hop router.
- Optionally the RA message can provide DNS server addresses. If present then the DTE shall apply the DNS configuration, otherwise the DTE should perform manual configuration.

37.1.1.2 <networking_mode> = Bridge

☞ TOBY-L4
The bridge mode is not supported.

The IP termination of each context is on the DTE. The module will act as a bridge and forward the IP packets based on the source address.

☞ The user must set the right source address in the IP headers to drive the module's routing over the right context.

37.1.1.2.1 IPv4

- The module does not run any DHCP/DNS server and it does not perform any NAT procedure
- The routing over multiple contexts is done by the module by source IP detection
- For each active context the module creates an IP interface (which takes care of replying to ARP requests); the IP address of such interface can be retrieved via the +UIPADDR AT command

- For each active context the DTE should manually configure its USB virtual ethernet interface in order to
  - Retrieve the associated public IP address via +CGDCONT and assign it as IP alias
  - Retrieve the module's local configuration of the bridged interface (IP address and subnet mask) with +UIPADDR and add the required routing rules
- The module will perform routing over contexts using the IP alias set by the DTE

37.1.1.2.2 IPv6

In general terms, the global connectivity configuration of the network node shall be performed automatically by the IPv6 network through the use of IPv6 Neighbor Discovery Protocol (NDP).

- The DTE will create its own link local address for the virtual Ethernet interface
- The module will do the same. Its address can be retrieved with the +UIPCONF AT command
- For each active context the module will not create any virtual interface
  - The DTE will receive RA (Routing Advertisement) messages and it will be able to configure its global address
  - The module will perform routing over contexts using the IP alias set by the DTE

☞ The DTE should prevent the transmission of any NS (Neighbor Solicitment).

37.2 Change the boot mode configuration +UBMCONF

+UBMCONF						
Modules	TOBY-L2 MPCI-L2					
Attributes	**Syntax**	**PIN required**	**Settings saved**	**Can be aborted**	**Response time**	**Error reference**
	partial	No	NVM	No	-	+CME Error

37.2.1 Description

Changes the system networking mode and configures the DHCP service in bridge mode. The chosen configuration is stored in NVM and will be applied after a reboot.

Behaviors in the supported boot mode configurations are the following:

- In **router mode** (<networking_mode>=1) the DHCP server can be configured within +UIPCONF AT command. The DHCP server will provide to the connected hosts the configuration of the private network provided by the module.
- In **bridge mode** (<networking_mode>=2) the DHCP server can be set with the parameters <bridge_dhcp_server> and <dhcp_cid>. The DHCP server in bridge mode will be activated only on the <dhcp_cid>. At the EPS bearer/PDP context activation the module will receive the IP configuration from the cellular network. It will use the received IP configuration to properly set the parameters of the DHCP server. The host will receive within the DHCP protocol the correct configuration to obtain connectivity. The IP configuration consists of the IP address of the activated EPS bearer/PDP context, the IP address of the gateway needed by the host to set the connectivity, and the list of DNS servers provided by the cellular network (additionally a fallback DNS server is provided). After the PDP context activation it is suggested for the DTE to perform a DHCP request to obtain the updated IP configuration.

☞ The configuration can be reverted to its factory-programmed value with AT+UBMCONF=.

37.2.2 Syntax

Type	Syntax	Response	Example
Set	AT+UBMCONF=[<networking_mode>[,<bridge_dhcp_server>[,<dhcp_cid>]]]	OK	AT+UBMCONF=1 OK
Read	AT+UBMCONF?	+UBMCONF: <networking_mode>[,<bridge_dhcp_server>,<dhcp_cid>] OK	+UBMCONF: 1 OK
Test	AT+UBMCONF=?	+UBMCONF: (list of supported <networking_mode>s)[,(list of supported <bridge_dhcp_server>s),(list of supported <dhcp_cid>s)] OK	+UBMCONF: (1-2),(0,1),(1-8) OK

37.2.3 Defined values

Parameter	Type	Description
<networking_mode>	Number	Networking operating mode of the RNDIS interface: • 1 (default and factory-programmed value): router mode • 2: bridge mode
<bridge_dhcp_server>	Number	DHCP server configuration: • 0 (default and factory-programmed value): disabled • 1: enabled This parameter is ignored for <networking_mode>=1.
<dhcp_cid>	Number	CID used by the DHCP server: the default and factory-programmed value for the preferred CID is 4. This parameter is ignored for <networking_mode>=1.

37.2.4 Notes

TOBY-L200-00S / TOBY-L200-02S / TOBY-L201 / TOBY-L210-00S / TOBY-L210-02S / TOBY-L210-60S / TOBY-L210-62S / TOBY-L220 / TOBY-L280-02S / MPCI-L2

- The <bridge_dhcp_server> and <preferred_cid> parameters are not supported.

TOBY-L200-03S / TOBY-L210-03A / TOBY-L210-03S / TOBY-L280-03S

- The <bridge_dhcp_server> and <preferred_cid> parameters are not supported by TOBY-L200-03S-00, TOBY-L210-03S-00, TOBY-L210-03A-00, TOBY-L280-03S-00.

37.3 Configure the Ethernet over USB IP network +UIPCONF

+UIPCONF						
Modules	TOBY-L4 TOBY-L2 MPCI-L2					
Attributes	**Syntax**	**PIN required**	**Settings saved**	**Can be aborted**	**Response time**	**Error reference**
	full	No	NVM	No	-	+CME Error

37.3.1 Description

Configures the IPv4 network of the Ethernet over USB interfaces. The user can configure the module's IPv4 address, subnet mask, DHCP server's IPv4 address range.

The changes are stored in NVM and they need a reboot to be applied

The user should manually renew the DHCP configuration (host side) if any change is made to the DHCP server configuration.

The DHCP configuration will be ignored when operating in bridge mode.

☞ The configuration can be reverted to its factory-programmed values with AT+UIPCONF=.

37.3.2 Syntax

Type	Syntax	Response	Example
Set	AT+UIPCONF=[<ipv4_address>,<subnet_mask>,<dhcp_ipv4_start>,<dhcp_ipv4_end>[,<dhcp_status>]]	OK	AT+UIPCONF="192.168.2.1","255.255.255.0","192.168.2.100","192.168.2.100",0 OK
Read	AT+UIPCONF?	+UIPCONF: <ipv4_address>,<subnet_mask>,<dhcp_ipv4_start>,<dhcp_ipv4_end>,<ipv6_link_local_address>[,<dhcp_status>] OK	+UIPCONF: "192.168.1.1","255.255.255.0","192.168.1.100","192.168.1.100","FE80::58FC:54FF:FE00:CB45/64",1 OK
Test	AT+UIPCONF=?	+UIPCONF: OK	+UIPCONF: OK

37.3.3 Defined values

Parameter	Type	Description
<ipv4_address>	String	Private IPv4 address of the Ethernet over USB interface. The IPv4 address consists of 4 octects: "ddd.ddd.ddd.ddd": • TOBY-L4 - The default and factory-programmed value is 192.168.2.16. • TOBY-L2 / MPCI-L2 - The default and factory-programmed value is "192.168.1.1".
<subnet_mask>	String	The subnet mask consists of 4 octects: "ddd.ddd.ddd.ddd". The default and factory-programmed value is "255.255.255.0".
<dhcp_ipv4_start>	String	DHCP IPv4 start of address range. The IPv4 address consists of 4 octects: "ddd.ddd.ddd.ddd": • TOBY-L4 - The default and factory-programmed value is "192.168.2.100" • TOBY-L2 / MPCI-L2 - The default and factory-programmed value is "192.168.1.100"
<dhcp_ipv4_end>	String	DHCP IPv4 end of address range. The IPv4 address consists of 4 octects: "ddd.ddd.ddd.ddd": • TOBY-L4 - The default and factory-programmed value is 192.168.2.150 • TOBY-L2 / MPCI-L2 - The default and factory-programmed value is "192.168.1.100"
<ipv6_link_local_address>	String	Link Local IPv6 address of the Ethernet over USB. It consists of 8 groups of four hexadecimal digits representing 2 octets. The groups are separated by colons. Leading zero suppression and zero compression maybe applied. The network prefix is written in CIDR notation, by appending a slash and the needed decimal digits to the IPV6 address.
<dhcp_status>	Number	Manage the embedded DHCP server status; allowed values: • 0: DHCP server disabled • 1: DHCP server enabled The default and factory-programmed value is 1.

37.3.4 Notes

- The <dhcp_ipv4_start> and <dhcp_ipv4_end> parameters must belong to the virtual Ethernet interface's IPv4 subnet.

TOBY-L2 / MPCI-L2

- The <dhcp_status> parameter is not supported.

37.4 Interface configuration +UIFCONF

+UIFCONF						
Modules	TOBY-L4006 TOBY-L4106 TOBY-L4206 TOBY-L4906-01A TOBY-L4906-51A					
Attributes	**Syntax**	**PIN required**	**Settings saved**	**Can be aborted**	**Response time**	**Error reference**
	partial	No	NVM	No	-	+CME Error

37.4.1 Description

Configures the IP settings of a network interface (except for the cellular network interfaces). The settings are related to the configuration of the IP address, network mask, DHCP server service, and of the AT interface over the IP connection. The command can be used to retrieve the MAC address and the operating system interface name.

The changes are stored in NVM and they need a reboot to be applied.

37.4.2 Syntax

Type	Syntax	Response	Example
Generic syntax			
Set	AT+UIFCONF=<iftype>,<ifnumber>,<cmd_tag>[,< ... cmd_specific_params ... >]	OK	AT+UIFCONF=0,0,1,0,"192.168.1.1" OK
Read	AT+UIFCONF=<iftype>,<ifnumber>,<cmd_tag>[,< ... cmd_specific_params ... >]	+UIFCONF: [< ... cmd_specific_params ... >] OK	AT+UIFCONF=0,0,1,0 +UIFCONF: "125.24.51.133" OK

Type	Syntax	Response	Example
Interface status configuration			
Set	AT+UIFCONF=<iftype>,<ifnumber>,0,<interface_status>	OK	AT+UIFCONF=1,0,0,1 OK
Read	AT+UIFCONF=<iftype>,<ifnumber>,0	+UIFCONF: <interface_status> OK	AT+UIFCONF=1,0,0 +UIFCONF: 1 OK
Interface IPv4 address configuration			
Set	AT+UIFCONF=<iftype>,<ifnumber>,1,0,<interface_IP_address>	OK	AT+UIFCONF=1,0,1,0,"192.168.90.60" OK
Read	AT+UIFCONF=<iftype>,<ifnumber>,1,0	+UIFCONF: <interface_IP_address> OK	AT+UIFCONF=1,0,1,0 +UIFCONF: "192.168.90.60" OK
Interface IPv4 netmask configuration			
Set	AT+UIFCONF=<iftype>,<ifnumber>,1,1,<interface_IP_netmask>	OK	AT+UIFCONF=1,0,1,1,"255.255.255.0" OK
Read	AT+UIFCONF=<iftype>,<ifnumber>,1,1	+UIFCONF: <interface_IP_netmask> OK	AT+UIFCONF=1,0,1,1 +UIFCONF: "255.255.255.0" OK
Interface IPv4 configuration apply			
Set	AT+UIFCONF=<iftype>,<ifnumber>,1,100	OK	AT+UIFCONF=1,0,1,100 OK
Interface IPv4 DHCP server status configuration			
Set	AT+UIFCONF=<iftype>,<ifnumber>,3,0,<interface_DHCP_server_status_conf>	OK	AT+UIFCONF=1,0,3,0,1 OK
Read	AT+UIFCONF=<iftype>,<ifnumber>,3,0	+UIFCONF: <interface_DHCP_server_status_conf> OK	AT+UIFCONF=1,0,3,0 +UIFCONF: 1 OK
Interface IPv4 DHCP server range begin configuration			
Set	AT+UIFCONF=<iftype>,<ifnumber>,3,1,<interface_DHCP_server_range_begin_conf>	OK	AT+UIFCONF=1,0,3,1,"192.168.90.100" OK
Read	AT+UIFCONF=<iftype>,<ifnumber>,3,1	+UIFCONF: <interface_DHCP_server_range_begin_conf> OK	AT+UIFCONF=1,0,3,1 +UIFCONF: "192.168.90.100" OK
Interface IPv4 DHCP server range end configuration			
Set	AT+UIFCONF=<iftype>,<ifnumber>,3,2,<interface_DHCP_server_range_end_conf>	OK	AT+UIFCONF=1,0,3,2,"192.168.90.150" OK
Read	AT+UIFCONF=<iftype>,<ifnumber>,3,2	+UIFCONF: <interface_DHCP_server_range_end_conf> OK	AT+UIFCONF=1,0,3,2 +UIFCONF: "192.168.90.150" OK
Interface IPv4 DHCP server configuration apply			
Set	AT+UIFCONF=<iftype>,<ifnumber>,3,100	OK	AT+UIFCONF=1,0,3,100 OK
AT interface over an IP connection configuration			
Set	AT+UIFCONF=<iftype>,<ifnumber>,90,<terminal_id>,<tcp_control_port>,<tcp_data_port>	OK	AT+UIFCONF=1,0,90,1,56090,56091 OK
Read	AT+UIFCONF=<iftype>,<ifnumber>,90,<terminal_id>	+UIFCONF: <tcp_control_port>,<tcp_data_port>	AT+UIFCONF=1,0,90,1 +UIFCONF: 56090,56091

Type	Syntax	Response	Example
		OK	OK
Interface MAC address configuration			
Read	AT+UIFCONF=<iftype>,<ifnumber>, 98	+UIFCONF: <interface_MAC_address> OK	AT+UIFCONF=1,0,98 +UIFCONF: "56:1F:5A:C9:90:E1" OK
Interface name configuration			
Read	AT+UIFCONF=<iftype>,<ifnumber>, 99	+UIFCONF: <interface_name> OK	AT+UIFCONF=1,0,99 +UIFCONF: "eth0" OK

37.4.3 Defined values

Parameter	Type	Description
<iftype>	Number	Interface type identifier: • 0: NCM • 1: ETH
<ifnumber>	Number	Interface number identifier
<cmd_tag>	Number	Command tag: • 0: interface status • 1: IPv4 configuration • 3: IPv4 DHCP configuration • 90: AT interface over an IP connection • 98: interface MAC address • 99: interface name
<interface_status>	Number	Interface status. Allowed values: • 0: disabled • 1 (factory-programmed value): enabled
<interface_IP_address>	String	Interface IPv4 address. The factory-programmed value depends on the module and of the interface. For IP address format reference see the IP addressing.
<interface_IP_netmask>	String	Interface IPv4 network mask. The factory-programmed value depends on the module and of the interface. For IP address format reference see the IP addressing.
<interface_DHCP_server_status_conf>	Number	Interface IPv4 DHCP server status configuration. The allowed values are: • 0: disabled • 1 (factory-programmed value): enabled
<interface_DHCP_server_range_begin_conf>	String	The first IPv4 address of the interface DHCP server range. The factory-programmed value depends on the module and of the interface. For IP address format reference see the IP addressing.
<interface_DHCP_server_range_end_conf>	String	The last IPv4 address of the interface DHCP server range. The factory-programmed value depends on the module and of the interface. For IP address format reference see the IP addressing.
<interface_apply_conf>	Number	The value 100 is used to apply the configuration run-time without any power cycle.
<terminal_id>	Number	Identifier of the AT terminal over the IP interface. The factory-programmed value depends on the module and of the interface.
<tcp_control_port>	Number	TCP control port number of the AT interface over an IP connection. The factory-programmed value depends on the module and of the interface.
<tcp_data_port>	Number	TCP data port number of the AT interface over an IP connection. The factory-programmed value depends on the module and of the interface.
<interface_MAC_address>	String	Physical MAC address of the interface.
<interface_name>	String	Operating system interface name.

37.4.4 Notes

TOBY-L4

- For <iftype>=0 (NCM) and <iftype>=1 only <ifnumber>=0 is supported.
- For <iftype>=0 the <interface_status>=0 and <cmd_tag>=0 are not applicable.
- For <cmd_tag>=90 only <terminal_id>=0 is supported.

- <interface_apply_conf>=100 is not supported.
- Table 84 provides the factory-programmed setting for the supported TOBY-L4 interfaces:

<interface_name>	usb0	eth0
<iftype>	0	1
<ifnumber>	0	0
<interface_status>	1	1
<interface_DHCP_server_status_conf>	1	1
<interface_IP_address>	192.168.2.16	192.168.90.60
<interface_IP_netmask>	255.255.255.0	255.255.255.0
<interface_DHCP_server_range_begin_conf>	192.168.2.100	192.168.90.100
<interface_DHCP_server_range_end_conf>	192.168.2.150	192.168.90.150
<tcp_control_port>	50950	50960
<tcp_data_port>	50951	50961

Table 84: TOBY-L4 factory-programmed setting

37.5 Get the USB IP configuration +UIPADDR

+UIPADDR						
Modules	TOBY-L4 TOBY-L2 MPCI-L2					
Attributes	**Syntax**	**PIN required**	**Settings saved**	**Can be aborted**	**Response time**	**Error reference**
	full	No	No	No	-	+CME Error

37.5.1 Description

Returns the current USB IP configuration for the requested active <cid> based on the current <networking_mode>. In the <cid> parameter is omitted, the information text response will display all the active <cid>s.

The module does not create any virtual interface for an active IPv6 <cid> in bridge mode. The IPv6 configuration session is performed between the DTE and the network.

In this case the <cid> will not be reported as configured.

37.5.2 Syntax

Type	Syntax	Response	Example
Set	AT+UIPADDR=[<cid>]	+UIPADDR: <cid>,<if_name>,<ipv4_address>,<subnet_mask>,<ipv6_global_address>,<ipv6_link_local_address> OK	See Examples
Test	AT+UIPADDR=?	+UIPADDR: (list of <cid>'s active virtual device) OK	+UIPADDR: 1,2 OK

37.5.3 Defined values

Parameter	Type	Description
<cid>	Number	Active context. By default the active <cid> is reported. If the <cid> parameter is omitted, all the active <cid>s are reported.
<if_name>	String	Interface name. In the router mode the name is "ccinetd", while in the bridge mode it is "usb0:d", where d is a decimal digit.
<ipv4_address>	String	IPv4 address of the interface. The IPv4 address consists of 4 octects: "ddd.ddd.ddd.ddd". The default value is "192.168.1.1".
<subnet_mask>	String	The subnet mask consists of 4 octects: "ddd.ddd.ddd.ddd". The default value is "255.255.255.0".
<ipv6_global_address>	String	Global IPv6 address of the interface. It consists of 8 groups of four hexadecimal digits representing 2 octects. The groups are separated by colons. Leading zero suppression and zero compression maybe applied. The network prefix is written in CIDR notation, by appending a slash and the needed decimal digits to the IPv6 address.

Parameter	Type	Description
<ipv6_link_local_address>	String	Link Local IPv6 address of the interface. It consists of 8 groups of four hexadecimal digits representing 2 octects. The groups are separated by colons. Leading zero suppression and zero compression maybe applied. The network prefix is written in CIDR notation, by appending a slash and the needed decimal digits to the IPv6 address.

37.5.4 Notes

- If the requested <cid> is not active the command will reply with an error result code.

TOBY-L4

- Bridge mode is not supported.
- The nomenclature inm(x) is used instead of the ccinet(x).
  - The inm(x) is the name of the Linux network interface mapped to an activated PDP context.
  - The x parameter is in the range from 0 to 3.
  - Example: inm0 interface is mapped to the PDP context with CID 1.

37.5.5 Examples

Description	Command	Response
Router mode (IPv4 context)	AT+UIPADDR=1	+UIPADDR: 1,"ccinet0","5.168.120.13","255.255.255.0","","" OK
Router mode (IPv6 context)	AT+UIPADDR=2	+UIPADDR: 2,"ccinet1","","","2001::2:200:FF:FE00:0/64","FE80::200:FF:FE00:0/64" OK
Router mode (IPv4v6 context)	AT+UIPADDR=3	+UIPADDR: 3,"ccinet2","5.10.100.2","255.255.255.0","2001::1:200:FF:FE00:0/64","FE80::200:FF:FE00:0/64" OK
Router mode (IPv4v6 context) (all contexts)	AT+UIPADDR=	+UIPADDR: 1,"ccinet0","5.168.120.242","255.255.255.255","","" +UIPADDR: 2,"ccinet1","46.12.30.162","255.255.255.255","","" +UIPADDR: 4,"ccinet3","76.18.130.262","255.255.255.255","2001::2:200:FF:FE00:0/64","FE80::200:FF:FE00:0/64""","" OK
Router mode (all contexts)	AT+UIPADDR=	+UIPADDR: 1,"ccinet0","10.24.48.129","255.255.255.0","","" +UIPADDR: 2,"ccinet1","10.32.44.135","255.255.255.0","","" OK
Bridge mode (IPv4 context)	AT+UIPADDR=1	+UIPADDR: 1,"usb0:0","5.168.120.242","255.0.0.0","","" OK
Bridge mode (IPv6 context)	AT+UIPADDR=2	ERROR
Bridge mode (IPv4v6 context)	AT+UIPADDR=3	+UIPADDR: 3,"usb0:2","5.168.120.100","255.255.255.255","","" OK
Bridge mode (IPv4v6 context) (all contexts)	AT+UIPADDR=	+UIPADDR: 1,"usb0:0","5.168.120.242","255.255.255.255","","" +UIPADDR: 4,"usb0:3","76.18.130.262","255.255.255.255","","" OK
Bridge mode (all contexts)	AT+UIPADDR=	+UIPADDR: 1,"usb0:0","10.40.184.162","255.255.255.0","","" +UIPADDR: 2,"usb0:1","10.92.161.200","255.255.255.0","","" OK
Bridge mode (bridge and router mode mixed contexts)	AT+UIPADDR=	+UIPADDR: 1,"ccinet0","10.98.126.158","255.255.255.0","","" +UIPADDR: 2,"usb0:1","10.26.129.73","255.255.255.0","","" OK
No virtual devices active	AT+UIPADDR=	OK
Wrong CID	AT+UIPADDR=4	ERROR

37.6 IP routing configuration +UIPROUTE

+UIPROUTE						
Modules	TOBY-L4 TOBY-L2 MPCI-L2					
Attributes	**Syntax**	**PIN required**	**Settings saved**	**Can be aborted**	**Response time**	**Error reference**
	full	No	No	No	-	+CME Error

37.6.1 Description

Configures the module's IP routing, using the ROUTE syntax and implementing destination based routing. The new configuration is added to the current one and it is instantly applied.

The configuration is not stored into NVM.

The configuration is allowed in the following cases:

- The module is configured in router mode
- The module is configured in bridge mode but has at least one active PDN in router mode.

☞ TOBY-L4
The bridge mode is not supported.

☞ TOBY-L2 / MPCI-L2
See the +UDPDP AT command description for more details on the bridge mode.

The configuration can be reverted by manually deleting each route previously added or by a power cycle.

This AT command should be mainly used for setting static routing rules for specific networks/hosts.

The typical user case is the following:

- The "internet" PDN is activated first and it is the current default gateway
- The user activates another "alternate data" PDN (MMS for example)
- The user wants to connect to a server through the "alternate data" PDN connection but the server's IP address does not belong to the IP subnet of the "alternate data" PDN
- Therefore the user must manually add a routing rule to reach the server through the "alternate data" PDN

☞ The usage of default gateway rules is not recommended and can disrupt the module functionality.

☞ TOBY-L200-00S / TOBY-L210-00S / TOBY-L210-60S / MPCI-L200-00S / MPCI-L210-00S / MPCI-L210-60S
The command does not support IPv6 functionality.

37.6.2 Syntax

Type	Syntax	Response	Example
Set	AT+UIPROUTE=<route_raw_input>	[+UIPROUTE: <route_raw_output>] OK	AT+UIPROUTE="add -net 129.56.76.0 netmask 255.255.255.0 dev ccinet2" OK
Read	AT+UIPROUTE?	+UIPROUTE: [<route_raw_output>] OK	+UIPROUTE: Kernel IP routing table Destination Gateway Genmask Flags Metric Ref Use Iface 192.168.1.0 0.0.0.0 255.255.255.0 U 0 0 0 usb0 Kernel IPv6 routing table Destination Next Hop Flags Metric Ref Use Iface fe80::/64 :: U 256 0 0 usb0 ::1/128 :: U 0 0 1 lo fe80::4483:18ff:feff:328/128 :: U 0 0 1 lo ff00::/8 :: U 256 0 0 usb0

Type	Syntax	Response	Example
			OK
Test	AT+UIPROUTE=?	+UIPROUTE: OK	+UIPROUTE: OK

37.6.3 Defined values

Parameter	Type	Description
<route_raw_input>	String	String compliant to ROUTE syntax
<route_raw_output>	String	Contains the ROUTE output related to the user's request

37.6.4 Notes

TOBY-L4

- The nomenclature inm(x) is used instead of the ccinet(x).
  - The inm(x) is the name of the Linux network interface mapped to an activated PDP context.
  - The x parameter is in the range from 0 to 3.
  - Example: inm0 interface is mapped to the PDP context with CID 1.
- To provide "off the shelf" internet access (router mode only) an automatic default gateway route handling mechanism has been introduced. This mechanism can be controlled (i.e. when custom default gateway and routing handling is required) by means of the +UDCONF=64 command AT command. The automatic default gateway route handling mechanism is activated when an "internet" PDN is activated and follows the following logic:
  - When an "internet" PDN is activated a new inm(x) interface is added to the network interfaces list.
    - A default gateway rule is searched in the internal routing rules table.
    - If there is no default gateway rule, the newly added network interface inm(x) is added as default gateway.
    - If there is an default gateway rule already present no action is taken.
  - When an "internet" PDN is de-activated the inm(x) is removed from the network interfaces list.
    - A default gateway with inm(x) is searched in the internal routing table.
    - If there is an default gateway with inm(x) present then it is removed.
    - If there is no default gateway with inm(x) no action is taken.
- If the <route_raw_input> string is not compliant to the ROUTE syntax the <route_raw_output> parameter will provide the ROUTE command error description. In this case the AT command will still respond with the OK final result code.

37.7 IP tables configuration +UIPTABLES

+UIPTABLES						
Modules	TOBY-L4 TOBY-L2 MPCI-L2					
Attributes	**Syntax**	**PIN required**	**Settings saved**	**Can be aborted**	**Response time**	**Error reference**
	full	No	NVM	No	-	+CME Error

37.7.1 Description

Changes the module's networking configuration, using the IPTABLES syntax. The new configuration is added to the current one and it is applied and instantly saved into NVM.

The configuration is independent from the currently selected <networking_mode>.

The output of the configuration is reported as an IRC before the "OK" final result code.

37.7.2 Syntax

Type	Syntax	Response	Example
Set	AT+UIPTABLES=[<iptables_raw_input>]	[+UIPTABLES: <iptables_raw_output>] OK	AT+UIPTABLES="-A INPUT -p ICMP -icmp-type 8 -j DROP" OK AT+UIPTABLES="<wrong_string>"

Type	Syntax	Response	Example
			+UIPTABLES: Bad argument <wrong_string> OK
Read	AT+UIPTABLES?	+UIPTABLES: [<iptables_raw_output>] OK	+UIPTABLES: Chain INPUT (policy DROP) target prot opt source destination ACCEPT all -- anywhere anywhere state RELATED,ESTABLISHED ACCEPT tcp -- anywhere anywhere tcp dpt:http ACCEPT tcp -- anywhere anywhere tcp dpt:https ACCEPT tcp -- anywhere anywhere tcp dpt:bootps ACCEPT udp -- anywhere anywhere udp dpt:bootps ACCEPT udp -- anywhere anywhere udp dpt:domain ACCEPT tcp -- anywhere anywhere tcp dpt:domain ACCEPT udp -- anywhere anywhere udp dpt:12345 ACCEPT tcp -- anywhere anywhere tcp dpt:12345 ACCEPT udp -- anywhere anywhere udp dpt:30001 ACCEPT icmp -- anywhere anywhere icmp echo-request limit: avg 10/sec burst 5 DROP icmp -- anywhere anywhere icmp echo-request ACCEPT icmp -- anywhere anywhere ACCEPT tcp -- anywhere anywhere tcp dpt:49152 ACCEPT tcp -- anywhere anywhere tcp dpt:49152 ACCEPT udp -- anywhere anywhere udp dpt:1900 ACCEPT all -- 127.0.0.0/8 anywhere ACCEPT tcp -- anywhere anywhere tcp dpt:5555 ACCEPT tcp -- anywhere anywhere tcp dpt:8080 Chain FORWARD (policy DROP) target prot opt source destination FWD_UPNP all -- anywhere anywhere ACCEPT all -- anywhere anywhere Chain OUTPUT (policy ACCEPT) target prot opt source destination OK
Test	AT+UIPTABLES=?	+UIPTABLES:	+UIPTABLES:

Type	Syntax	Response	Example
		OK	OK

37.7.3 Defined values

Parameter	Type	Description
<iptables_raw_input>	String	String compliant to IPTABLES syntax. The default value is an empty string, meaning reset to the default configuration
<iptables_raw_output>	String	String containing the IPTABLES output related to the user's request

37.7.4 Notes

TOBY-L2 / MPCI-L2

- The following TCP/UDP/ICMP connection timeouts are not affected by the command:

Timeout	Description	Default value [s]
generic_timeout	generic timeout value	600
tcp_timeout_syn_sent	Timeout value related to the connection state SYN-SENT (defined in RFC 793 [112])	120
tcp_timeout_syn_recv	Timeout value related to the connection state SYN-RECEIVED (defined in RFC 793 [112])	60
tcp_timeout_established	Timeout value related to the connection state ESTABLISHED (defined in RFC 793 [112])	432000
tcp_timeout_fin_wait	Timeout value related to the connection state FIN-WAIT-1 and FIN-WAIT-2 (defined in RFC 793 [112])	120
tcp_timeout_close_wait	Timeout value related to the connection state CLOSE-WAIT (defined in RFC 793 [112])	60
tcp_timeout_last_ack	Timeout value related to the connection state LAST-ACK (defined in RFC 793 [112])	30
tcp_timeout_time_wait	Timeout after which the connection goes to the closed state	120
tcp_timeout_close	Timeout value related to the connection state CLOSE (defined in RFC 793 [112])	10
udp_timeout	Timeout value for UDP packets	300
udp_timeout_stream	Timeout value for UDP packets, when UDP stream is detected	300
icmp_timeout	Timeout value for IPv4 ICMP packets	30
icmpv6_timeout	Timeout value for IPv6 ICMP packets	30
frag6_timeout	Timeout value after the last fragmented IPv6 packet	60

TOBY-L4

- The command setting in not stored in the NVM.
- If the <iptables_raw_input> string is not compliant to the IPTABLES syntax the <iptables_raw_output> will provide the IPTABLES command error description. In this case the AT command will still respond with the OK final result code.

TOBY-L2

- The configuration can be reverted to its default values with AT+UIPTABLES=.

37.8 Configure PDP/EPS bearer connection type over USB +UDPDP

+UDPDP						
Modules	TOBY-L2 MPCI-L2					
Attributes	**Syntax**	**PIN required**	**Settings saved**	**Can be aborted**	**Response time**	**Error reference**
	full	No	No	No	-	+CME Error

37.8.1 Description

Sets the connection type of a specific context. The default configuration reflects the +UBMCONF settings. The command will work only in bridge mode to give connectivity to the internal IP stack.

In the information text response to the read command the dedicated bearer information is provided by means of the <networking_mode>=3 value.

37.8.2 Syntax

Type	Syntax	Response	Example
Set	AT+UDPDP=<cid>[,<networking_mode>]	OK	AT+UDPDP=1,1 OK
Read	AT+UDPDP?	For each <cid>: + UDPDP: <cid>,<networking_mode> [.] OK	+UDPDP: 1,1 +UDPDP: 2,1 +UDPDP: 3,1 +UDPDP: 4,1 +UDPDP: 5,1 +UDPDP: 6,1 +UDPDP: 7,1 +UDPDP: 8,1 OK
Test	AT+UDPDP=?	+UDPDP: (list of supported <cid>s), (list of supported <networking_mode>s) OK	+UDPDP: (1-8),(1-2) OK

37.8.3 Defined values

Parameter	Type	Description
<networking_mode>	Number	Configure the state: • 1: router context • 2: bridge context • 3: reference to a dedicated bearer; this value cannot be set but it is provided only in the information text response to the read command

37.8.4 Notes

- A <cid>'s configuration can be reverted to the current +UBMCONF <networking_mode> with AT +UDPDP=<cid>.

37.9 RNDIS driver optimization configuration +UDCONF=67

+UDCONF=67						
Modules	TOBY-L2 MPCI-L2					
Attributes	**Syntax**	**PIN required**	**Settings saved**	**Can be aborted**	**Response time**	**Error reference**
	full	No	NVM	No	-	+CME Error

37.9.1 Description

The RNDIS driver optimization allows a data transfer over the RNDIS link to reach the maximum throughput (LTE CAT4). This optimization can cause a lower throughput on some linux based operating systems both in router mode and in bridge mode. To fix this a DTE's kernel modification is needed (see Networking Modes Application Note [96]); if this is not possible and using CDC-ECM is not an option then disabling this feature might mitigate the effects in router mode only.

☞ The new configuration is saved in NVM and will be effective at the next power on.

37.9.2 Syntax

Type	Syntax	Response	Example
Set	AT+UDCONF=67,<mode>	OK	AT+UDCONF=67,1 OK

Type	Syntax	Response	Example
Read	AT+UDCONF=67	+UDCONF: 67,<mode> OK	+UDCONF: 67,1 OK

37.9.3 Defined values

Parameter	Type	Description
<mode>	Number	Configures the RNDIS driver optimization. Allowed values: • 0: RNDIS driver optimization disabled • 1 (factory-programmed value): RNDIS driver optimization enabled

37.10 Automatic default gateway route handling mechanism control +UDCONF=64

+UDCONF=64						
Modules	TOBY-L4					
Attributes	Syntax	PIN required	Settings saved	Can be aborted	Response time	Error reference
	full	No	NVM	No	-	+CME Error

37.10.1 Description

To provide "off the shelf" internet access (router mode only) an automatic default gateway route handling mechanism has been introduced. The mechanism is activated when an "internet" PDN is activated (for more information, see the +UIPROUTE AT command description). This command enables/disables the described mechanism in cases when custom the default gateway and routing handling is required.

☞ The configuration value is saved in NVM and is effective at the next module power-on.

37.10.2 Syntax

Type	Syntax	Response	Example
Set	AT+UDCONF=64,<mode>	OK	AT+UDCONF=64,1 OK
Read	AT+UDCONF=64	+UDCONF: 64,<mode> OK	+UDCONF: 64,1 OK

37.10.3 Defined values

Parameter	Type	Description
<mode>	Number	Configures the automatic default gateway route handling mechanism. Allowed values: • 0: automatic default gateway route handling mechanism disabled. • 1: (factory-programmed value): automatic default gateway route handling mechanism enabled.

38 Wi-Fi

38.1 Introduction

TOBY-L2 series modules (see the Wi-Fi AT commands applicability for the complete list of product versions supporting Wi-Fi functionalities) can be connected to ELLA-W1 Wi-Fi modules via the Secure Digital Input Output (SDIO) interface to provide Wi-Fi functionalities. The subsystem composed of these u-blox modules is referred to as Cellular / Wi-Fi subsystem.

An external processor can be connected to the Cellular / Wi-Fi subsystem by means of these interfaces:

- Ethernet over USB (e.g. RNDIS or CDC-ECM): see +UUSBCONF for the USB interface configuration
- UART

In the following description only the USB interface is displayed, since it is more suitable in terms of IP connectivity.

The Cellular / Wi-Fi subsystem can be configured in the following ways:

- **Router mode with Internet access via cellular network -** the cellular module provides Internet connectivity to Wi-Fi clients connected to the Wi-Fi access point. The clients communicate to the TOBY-L2 IP subsystem and the router functionality of the IP subsystem provides them Internet connection.

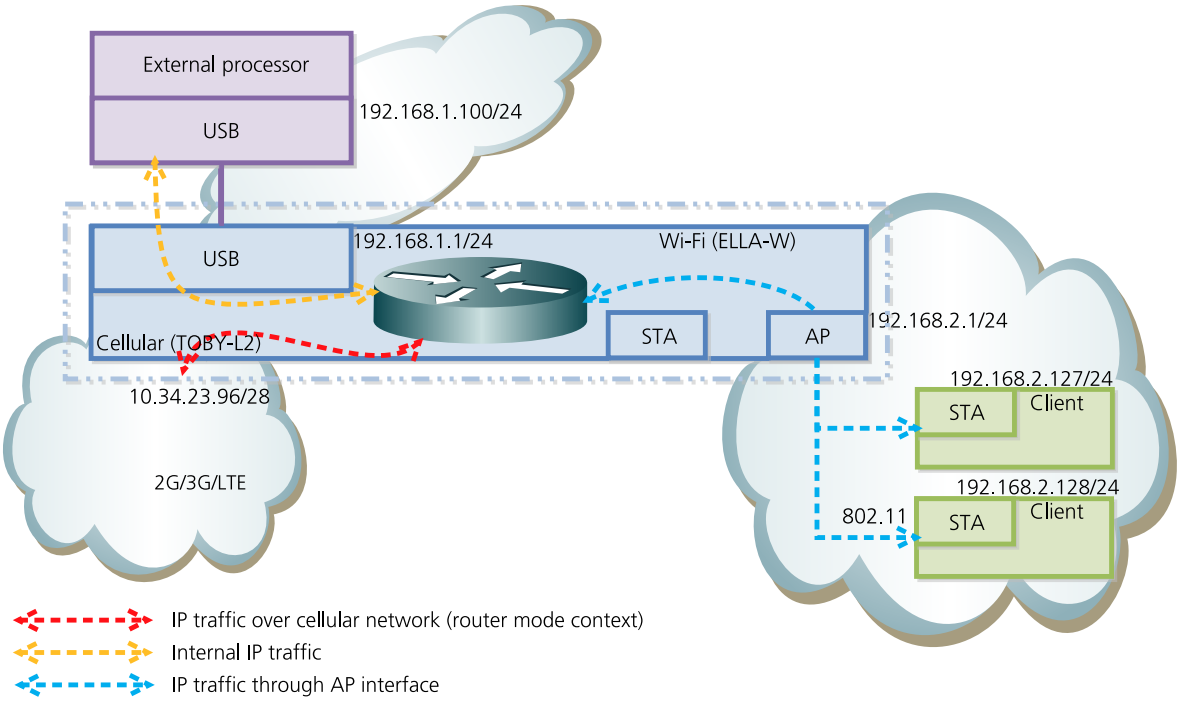

Figure 24: Router mode with Internet access via cellular network

- **Router mode with Internet access via external hotspot -** the Wi-Fi module is acting concurrently in two modes: wireless access point (AP) and wireless station (STA), respectively. The Wi-Fi clients are connected through the wireless access point to the TOBY-L2 module IP subsystem. The IP subsystem is connected to an external hotspot through the Wi-Fi interface operating in station mode. The IP traffic of the Wi-Fi clients and of the external hotspot is forwarded through the Wi-Fi interface (STA) of the Wi-Fi module. In this case the Internet connectivity is provided to users by the external hotspot instead of the cellular network. The AP is set on the same channel of the external hotspot, hence they should operate and share the resources available on the channel. The AP channel configuration is ignored, since it operates on the same channel as the STA. This behavior is also present in wireless repeaters (also known as wireless range extenders).

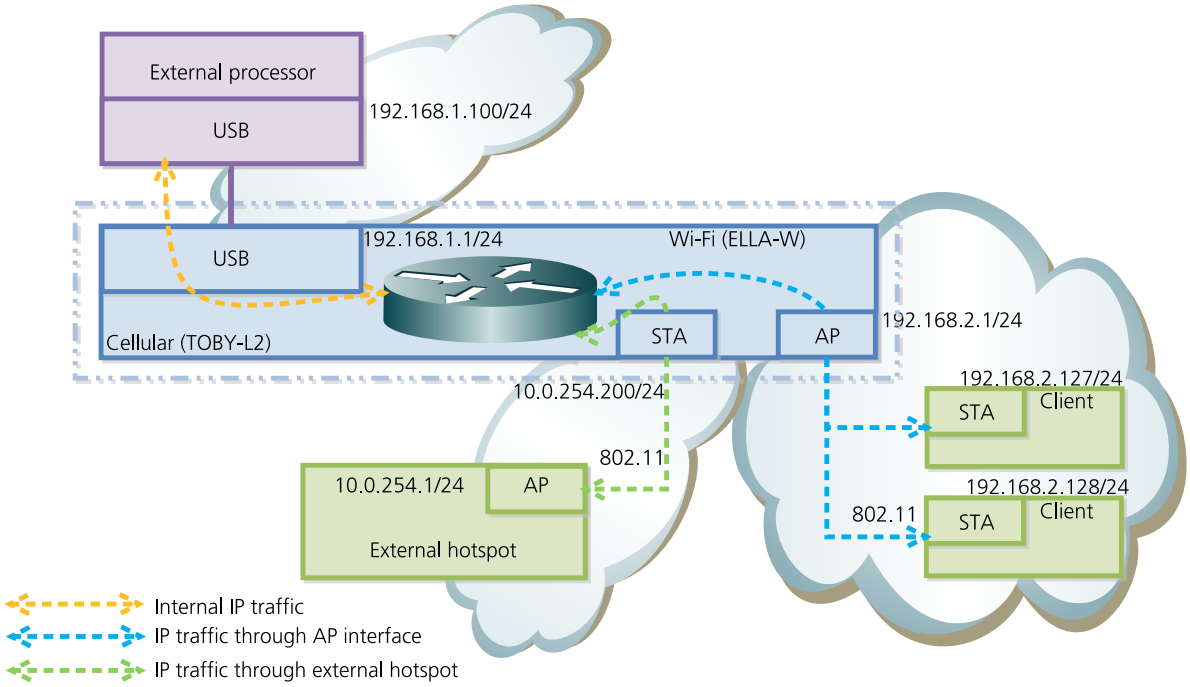

Figure 25: Router mode with Internet access via external hotspot

- **Router mode with Internet access either via cellular network or via external hotspot -** the cellular module IP subsystem can provide Internet connection either through the cellular module or through the wireless station interface dynamically switching between the two configurations described above.

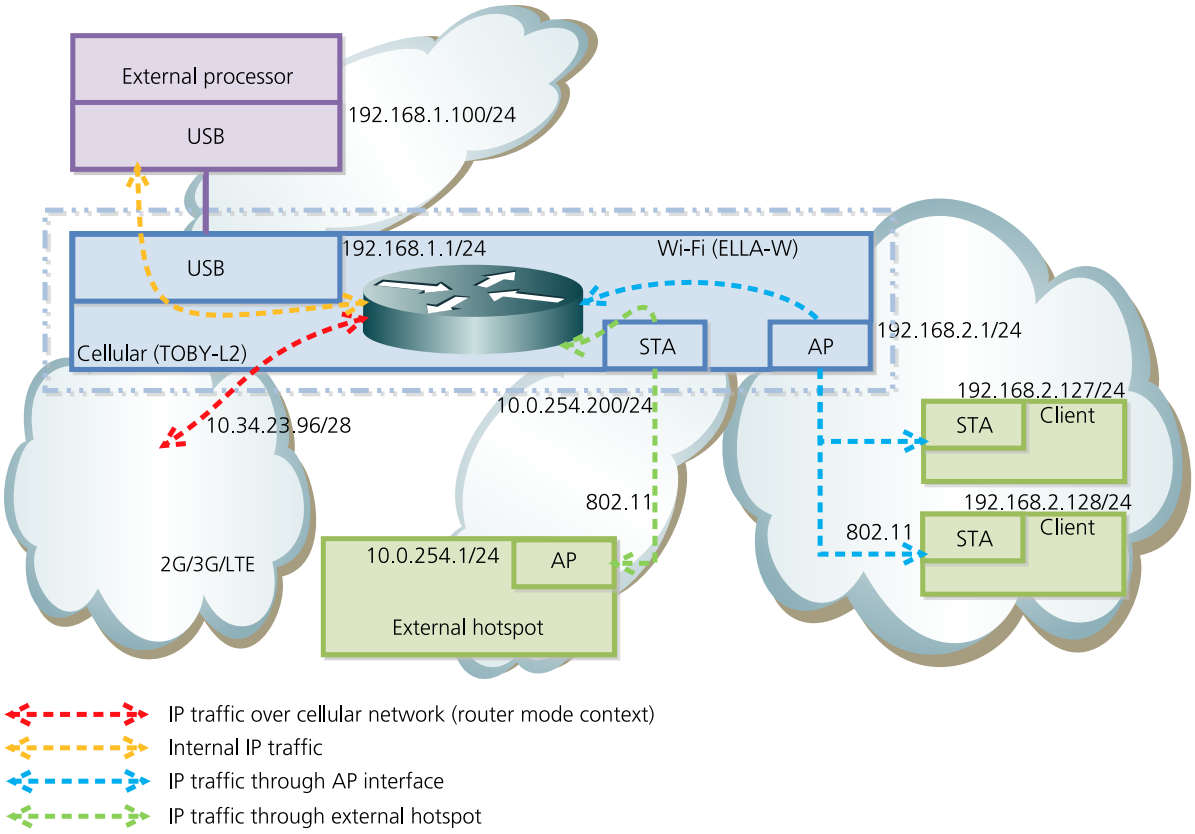

Figure 26: Router mode with Internet access via cellular network or via external hotspot

- **Bridge mode with Internet access either via cellular network or via external hotspot -** in bridge mode the cellular module provides Internet connectivity to the external processor by a bridge PDP contexts/ EPS bearers. A bridge PDP context/EPS bearer sets up a bridge between the cellular network and the USB interface. Furthermore, when the module is in bridge mode, several PDP contexts/EPS bearers can be configured as router contexts (see +UDPDP for PDP context/EPS bearer configuration). Router PDP contexts/EPS bearers are connected to the module IP subsystem. The cellular module IP subsystem can provide Internet connectivity either through the cellular module (router PDP context/EPS bearer) or through the wireless station interface, switching dynamically between the two options described above. The external processor may connect to the Internet either through the bridge PDP context/EPS bearer or through the USB interface which is connected to the module IP subsystem where connectivity is granted by a router PDP context/EPS bearer or by the wireless station interface.

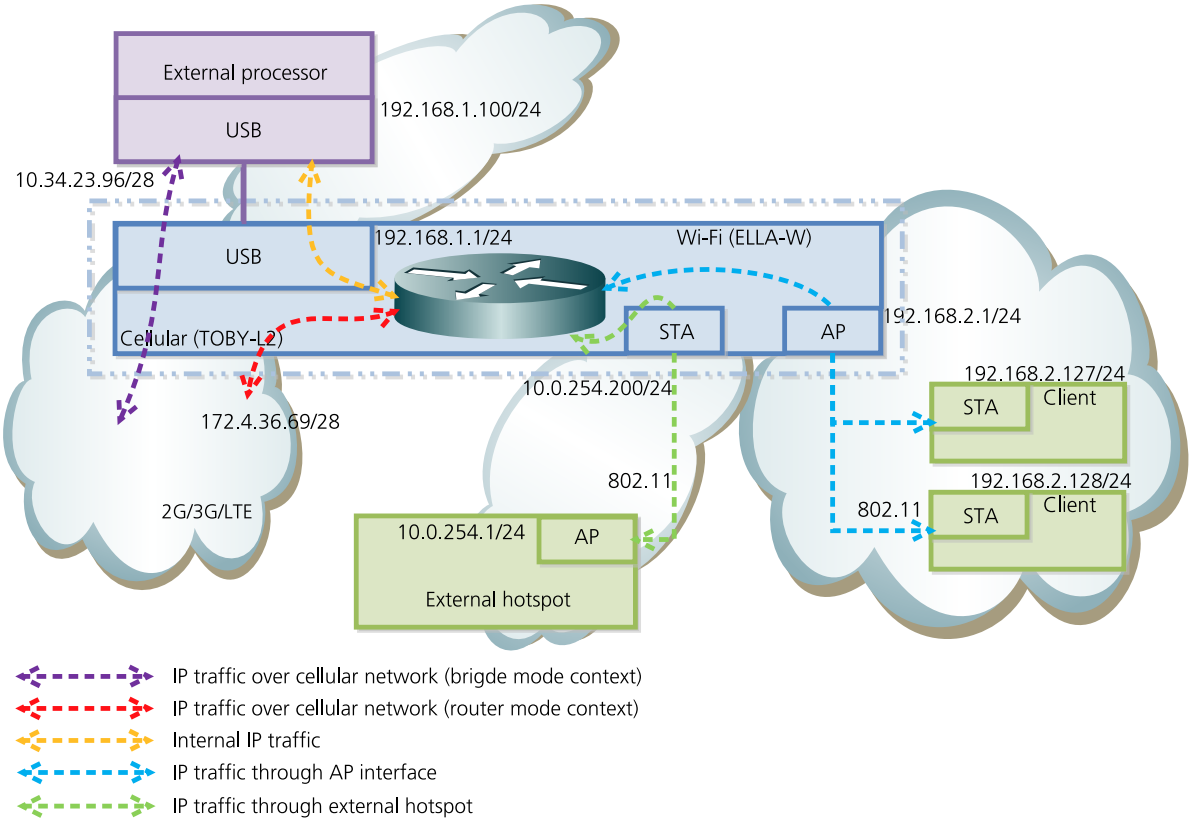

Figure 27: Bridge mode with Internet access via cellular network or via external hotspot

☞ The current scenario presents the most complete configuration between cellular and Wi-Fi modules. The only difference respect with the previous scenario is the bridge context / ESP bearer and hence the previous scenarios are a subset of this one.

The external processor can communicate directly with the wireless stations and access to Internet via cellular network or via the external Wi-Fi interface accordingly to the permitted system configuration.

See Wi-Fi / Cellular Integration Application Note [100] for a complete description of Wi-Fi functionalities and the configurations briefly described above.

The Wi-Fi functionalities can be properly configured by the following AT commands to cover all the previous use-cases:

- Wi-Fi module management:
  - Power mode configuration: +UWCFG
  - Firmware reset: +UWFWRESET
  - Maximum allowed output power configuration: +UWMP
  - Test mode configuration: +UWTEST
- Access point management:

  - Physical layer configuration: +UWAPCFG
  - Network layer configuration: +UWAPIPCFG
  - MAC address: +UWAPMACADDR
  - List of connected stations: +UWAPSTALIST
- Wireless station management:
  - Physical layer configuration: +UWSTACFG
  - Network layer configuration: +UWSTAIPCFG
  - Wi-Fi station signal level indicator: +UWSTACSQ
  - Network scan: +UWSCAN

38.2 Web User Interface (WebUI)

A graphical Web User Interface is provided for the Cellular/Wi-Fi subsystem configuration. In particular, the WebUI is used to configure the cellular and Wi-Fi functionalities. The features configurable with the WebUI are the following:

- Cellular:
  - Cellular network profile (APN, initial EPS bearer APN for LTE networks, roaming, alternative DNS servers, PIN entry, authentication parameters, ...)
  - Routing within the cellular network
- Wi-Fi:
  - Access point physical layer
  - Access point network layer
  - Station physical layer
  - Station network layer
  - Routing within the external hotspot
  - Web user interface customization
- Further information:
  - The list of the wireless clients associated to the access point
  - Uplink and downlink traffic counters

The configuration performed within the WebUI is applied after a reboot of the Cellular / Wi-Fi subsystem.

Access to the settings is password protected.

The WebUI interface can be properly enabled via the +UWWEBUI AT command.

The internal connection manager handles the cellular connectivity configured by means of the WebUI. The connection manager can be enabled either by means of the WebUI or the +UWCFG AT command. See +UWCFG AT command for further information regarding the internal connection manager.

The connection manager ensures the cellular connectivity using the fourth (4-th) CID in the case of LTE networks and the first (1-st) CID in the case of 2G/3G networks. When the connection manager is configured by means of the WebUI, previous configurations of these two CIDs done through AT commands may be overwritten.

The customization of the Web user interface can be performed through the FTP access to certain files of the HTTP server. See +UWWEBUIFTP AT command details for further information regarding the customization feature.

Manual refresh of the WebUI page is required if the setting is not accepted during the storing of the configuration due to an invalid setting.

See Wi-Fi / Cellular Integration Application Note [100] for a complete description of WebUI functionality and its configuration.

38.3 Wi-Fi module power mode, connection manager and Cellular / Wi-Fi conflict detection +UWCFG

+UWCFG						
Modules	TOBY-L200-02S TOBY-L200-03A TOBY-L200-03S TOBY-L201-02S TOBY-L210-02S TOBY-L210-03A TOBY-L210-03S TOBY-L210-62S TOBY-L220 TOBY-L280					
Attributes	**Syntax**	**PIN required**	**Settings saved**	**Can be aborted**	**Response time**	**Error reference**
	full	No	NVM	No	< 20 s	+CME Error

38.3.1 Description

Configures the Wi-Fi access point power mode, the connection manager, and the Cellular / Wi-Fi conflict detection.

The command turns on/off and puts in flight mode the Wi-Fi AP interface. The fight mode is applied also to the Wi-Fi STA interface, if it is enabled.

The complete power cycle of the AP Wi-Fi interface can be performed by consecutively turning off and turning on the AP interface (i.e. +UWCFG=0/1 cycle).

The connection manager (also referred to as connection configuration manager) allows the user to check and configure the cellular connectivity through the WebUI: since the AT commands interface is not available to Wi-Fi clients, they shall use the WebUI to configure the basic cellular connectivity.

When the connection manager is enabled, the MT is set to full functionality (+CFUN: 1), while when the connection manager is disabled the MT is put to minimum cellular functionality (+CFUN: 0). It is worth noticing that the cellular module boots in full functionality (+CFUN: 1,0) state and generally in automatic network selection mode (+COPS: 0,0), independently from the connection manager state. Hence, in LTE networks, the connectivity may be granted after boot time even if the connection manager is disabled (LTE networks may provide Internet connectivity on the initial EPS bearer).

The command can enable also URC reporting of possible conflicts between the cellular band and the Wi-Fi channels currently in use, that can disrupt the communications of both radio technologies. Depending on the value of the <conflict_ind_mode> parameter, the resolution of such conflict can be up to the user or automatically performed by the connection manager:

- **<conflict_ind_mode>=0**: no URC is shown and the user should handle connectivity issues if they appear
- **<conflict_ind_mode>=1**: a URC indicates the possible situation of conflict and the user is still in charge of handling the possible performance degradation
- **<conflict_ind_mode>=2 (semi automatic algorithm)**: a simple algorithm adjusts the range of channels adopted in the automatic Wi-Fi channel selection
- **<conflict_ind_mode>=3 (full automatic algorithm)**: adjusts the range of channels adopted in the automatic Wi-Fi channel selection and performs an automatic channel re-selection

The URC +UUWCFG reports the detected conflict:

- **<conflict_ind>=1**: the conflict affects LTE working in band 7 and Wi-Fi channels between 10 and 14
- **<conflict_ind>=2**: the conflict affects GSM 850 band and the Wi-Fi channels in the range 11 to 14

☞ If a parameter is omitted in the set command, the current value is kept.

☞ The <conflict_ind_mode> setting is not saved in NVM.

38.3.2 Syntax

Type	Syntax	Response	Example
Set	AT+UWCFG=<wifi_mode>[,<mgr>[,<conflict_ind_mode>]]	OK	AT+UWCFG=2,0,1 OK
Read	AT+UWCFG?	+UWCFG: <wifi_mode>,<mgr>,<conflict_ind_mode> OK	+UWCFG: 1,1,0 OK
Test	AT+UWCFG=?	+UWCFG: (list of supported <wifi_mode>s),(list of supported <mgr>s),	+UWCFG: (0-2),(0,1),(0-3) OK

Type	Syntax	Response	Example
		(list of supported <conflict_ind_mode>s) OK	
URC		+UUWCFG: <conflict_ind>	+UUWCFG: 1

38.3.3 Defined values

Parameter	Type	Description
<wifi_mode>	Number	Configures the power modes. Allowed values: • 0 (factory-programmed value): wireless off. The wireless access point is turned off • 1: wireless on. The wireless access point is turned on • 2: airplane mode. The wireless access point is turned off (the radio frequency transmission is turned off). If enabled, the Wi-Fi module enters the airplane mode (AP and STA are turned off).
<mgr>	Number	Configures the connection manager. Allowed values: • 0 (factory-programmed value): connection manager disabled • 1: connection manager enabled
<conflict_ind_mode>	Number	Specifies the configuration of the cellular Wi-Fi conflict reporting URC and which algorithm is adopted: • 0 (factory-programmed value): conflict reporting URC disabled • 1: URC enabled, manual user intervention is required to handle the conflict • 2: URC enabled, semi automatic algorithm • 3: URC enabled, full automatic algorithm
<conflict_ind>	Number	Specifies which cellular/Wi-Fi frequency conflict occurs: • 0: no conflict • 1: possible conflict among cellular module working in LTE band 7 and Wi-Fi working in channel range 10-14 • 2: possible conflict among cellular module working in GSM 850 band and Wi-Fi working in channel range 11-14

38.3.4 Notes

- When configuring both AP and STA mode at the same time via +UWCFG and +UWSTACFG AT commands, the STA channel setting is set also on the AP channel setting.
- When the module works as a Wi-Fi station (STA mode), <conflict_ind_mode>=0 and 1 are supported, while <conflict_ind_mode>=2 and 3 are equivalent to <conflict_ind_mode>=1.

38.4 Wi-Fi access point physical layer configuration +UWAPCFG

+UWAPCFG						
Modules	TOBY-L200-02S TOBY-L200-03A TOBY-L200-03S TOBY-L201-02S TOBY-L210-02S TOBY-L210-03A TOBY-L210-03S TOBY-L210-62S TOBY-L220 TOBY-L280					
Attributes	**Syntax**	**PIN required**	**Settings saved**	**Can be aborted**	**Response time**	**Error reference**
	full	No	NVM	No	< 20 s	+CME Error

38.4.1 Description

Configures the physical layer parameters of the Wi-Fi access point.

Since the regulatory domains block feature is supported, the current Wi-Fi access point physical layer configuration may differ from the one selected by the user. In particular, the reported regulatory domain is the currently applied regulatory domain. In addition, the user is not allowed to set a configuration (e.g. regulatory domain, channel and mode) in violation of the constraints of the currently applied regulatory domain. For further information see the +UWREGBLOCK AT command description.

☞ In the case the security passphare is volatile, it is not valid after the module reboot. Since the security passphrase is not valid after the module reboot, the AP interface will not be activated. The default SSID/passphrase are used enabling the AP interface when the SSID/passphrase are not set.

☞ Reboot the Cellular / Wi-Fi subsystem or perform a complete power cycle of the AP Wi-Fi interface to apply the new configuration.

38.4.2 Syntax

Type	Syntax	Response	Example
Set	AT+UWAPCFG=<ssid>,<security>,<psk>,<region>,<channel>,<mode>	OK	AT+UWAPCFG="UBXWifi",2,"ubx-wifi",1,0,3 OK
Read	AT+UWAPCFG?	+UWAPCFG: <ssid>,<security>,<psk>,<region>,<channel>,<mode> OK	+UWAPCFG: "UBXWifi",2,"ubx-wifi",1,0,3 OK
Test	AT+UWAPCFG=?	+UWAPCFG: <ssid>,(list of supported <security>s),<psk>,(list of supported <region>s),(list of supported <channel>s),(list of supported <mode>s) OK	+UWAPCFG: "UBXWifi",(0-3),"password",(0-2),(0-14),(0-4) OK

38.4.3 Defined values

Parameter	Type	Description
<ssid>	String	ESSID of the access point. The maximum length is 32 characters. The factory-programmed value is "UBXWifi".
<security>	Number	Wireless authentication method. Allowed values: • 0: OPEN • 1: WPA • 2 (factory-programmed value): WPA2 • 3: WPA_WPA2_MIXED • 4: WPA (volatile passphrase) • 5: WPA2 (volatile passphrase) • 6: WPA_WPA2_MIXED (volatile passphrase)
<psk>	String	Security passphrase. It can be long from 8 to 64 characters. The factory-programmed value is "ubx-wifi". If <security>="OPEN" the <psk> value is not taken into account and can be omitted
<region>	Number	Country code. Supported values: • 0: EU • 1: US • 2: JP Due to the regulatory domains block feature, this parameter has a limited configurability.
<channel>	Number	Wireless channel number. Allowed values: • 0 (factory-programmed value): automatic channel selection • 1-11: 2.4 GHz channel number • 12-13: Europe/Japan only • 14: Japan 11b only
<mode>	Number	IEEE standard. Allowed values: • 0: 802.11b • 1: 802.11g • 2: 802.11b/g • 3 (factory-programmed value): 802.11b/g/n • 4: 802.11n • 5: reserved • 6: reserved • 7: reserved

38.4.4 Notes

- If <mode>= 3 or 4 (802.11b/g/n or 802.11n), the <security> is automatically set to 2 (WPA2).

- The <security> can be set to 1 (WPA), only if the <mode> is set to 0, 1, or 2 (802.11b, 802.11g, 802.11b/g).

TOBY-L200 / TOBY-L201

- The factory-programmed value of <region> parameter is 1.

TOBY-L210 / TOBY-L280

- The factory-programmed value of <region> parameter is 0.

TOBY-L220

- The factory-programmed value of <region> parameter is 2.

TOBY-L200-02S / TOBY-L210-02S / TOBY-L210-62S / TOBY-L220 / TOBY-L280-02S

- <security>=4, 5, 6 are not supported.

38.5 Wi-Fi access point network layer configuration +UWAPIPCFG

+UWAPIPCFG						
Modules	TOBY-L200-02S TOBY-L200-03A TOBY-L200-03S TOBY-L201-02S TOBY-L210-02S TOBY-L210-03A TOBY-L210-03S TOBY-L210-62S TOBY-L220 TOBY-L280					
Attributes	**Syntax**	**PIN required**	**Settings saved**	**Can be aborted**	**Response time**	**Error reference**
	full	No	NVM	No	-	+CME Error

38.5.1 Description

Configures the network layer parameters of the Wi-Fi access point.

☞ Reboot the Cellular / Wi-Fi subsystem or perform a complete power cycle to apply the new configuration.

☞ The subnetwork of the USB network function (e.g. RNDIS/CDC-ECM interface) should be different from the subnetwork of the wireless access point. Use the +UIPCONF AT command to set the subnetwork of the USB network function. The connectivity between the two subnetworks is granted.

38.5.2 Syntax

Type	Syntax	Response	Example
Set	AT+UWAPIPCFG=<ip>,<netmask>,<dhcp_start>,<dhcp_end>	OK	AT+UWAPIPCFG="192.168.2.1","255.255.255.0","192.168.2.100","192.168.2.200" OK
Read	AT+UWAPIPCFG?	+UWAPIPCFG: <ip>,<netmask>,<dhcp_start>,<dhcp_end> OK	+UWAPIPCFG: "192.168.2.1","255.255.255.0","192.168.2.100","192.168.2.200" OK
Test	AT+UWAPIPCFG=?	+UWAPIPCFG: <ip>,<netmask>,<dhcp_start>,<dhcp_end> OK	+UWAPIPCFG: "192.168.2.1","255.255.255.0","192.168.2.100","192.168.2.200" OK

38.5.3 Defined values

Parameter	Type	Description
<ip>	String	IP address of the access point. The factory-programmed value is "192.168.2.1". The address must not be a network or broadcast address (see Notes for more details). The IP address shall not be in the range of DHCP server.
<netmask>	String	Netmask of the access point. The factory-programmed value is "255.255.255.0". The netmask must be a valid address.
<dhcp_start>	String	Start IP address of the DHCP range provided by the access point. The factory-programmed value is "192.168.2.100". The address must not be a network or broadcast address (see Notes for more details). The parameter value must be equal or lower than the <dhcp_stop> value.

Parameter	Type	Description
<dhcp_stop>	String	Stop IP address of the DHCP range provided by the access point. The factory-programmed value is "192.168.2.200". The address must not be a network or broadcast address (see Notes for more details). The parameter value must be equal or greater than the <dhcp_start> value.

38.5.4 Notes

- In the "network" address the last 32-(maskbit) bits are all set to 0.
- In the "broadcast" address the last 32-(maskbit) bits are all set to 1.
- The IP address should not be equal to an "network" or "broadcast" address
- The maskbit is the prefix size of the subnet mask in CIDR (Classless Inter-Domain Routing) notation expressed as a decimal number (see RFC 1518 [146] and RFC 1519 [147]).

38.6 Wi-Fi station physical layer configuration +UWSTACFG

+UWSTACFG						
Modules	TOBY-L200-02S TOBY-L200-03A TOBY-L200-03S TOBY-L201-02S TOBY-L210-02S TOBY-L210-03A TOBY-L210-03S TOBY-L210-62S TOBY-L220 TOBY-L280					
Attributes	**Syntax**	**PIN required**	**Settings saved**	**Can be aborted**	**Response time**	**Error reference**
	full	No	NVM	No	< 20 s	+CME Error

38.6.1 Description

Enables the STA interface and configures the physical layer parameters of the Wi-Fi station. The parameters configured by means of this command are used to establish the connection between the station and the external hotspot:

- If <enable>= 0, further parameters can be omitted.
- If <enable>= 1, the STA interface will be enabled and turned on.

The complete power cycle of the STA Wi-Fi interface can be performed by consecutively turning off and turning on the STA interface (i.e. +UWSTACFG=0/1 cycle).

☞ Reboot the Cellular / Wi-Fi subsystem or perform a complete power cycle of the STA Wi-Fi interface to apply the new configuration.

☞ In the case the security passphare is volatile, it is not valid after the reboot of the module. Since the security passphrase is not valid after the module reboot, the STA interface will not be activated.

38.6.2 Syntax

Type	Syntax	Response	Example
Set	AT+UWSTACFG=<enable>[,<ssid>,<security>,<psk>]	OK	AT+UWSTACFG=1,"external_hotspot_ssid",1,"external_hotspot_security_key" OK
Read	AT+UWSTACFG?	+UWSTACFG: <enable>[,<ssid>,<security>] OK	+UWSTACFG: 1,"external_hotspot_ssid",1 OK
Test	AT+UWSTACFG=?	+UWSTACFG: (list of supported <enable>s),<ssid>,(list of supported <security>s),<psk> OK	+UWSTACFG: (0,1),"external_hotspot_ssid",(0-2,11-18,21-28,31-38,41-48),"external_hotspot_security_key" OK

38.6.3 Defined values

Parameter	Type	Description
<enable>	Number	Configures the station mode of the wireless interface. Allowed values: • 0 (factory-programmed value): disabled • 1: enabled

Parameter	Type	Description
<ssid>	String	ESSID of the access point. The maximum length is 32 characters.
<security>	Number	Wireless authentication type. Allowed values: • 0 (default value): OPEN. The <psk> parameter is not mandatory • 1: WPA/WPA2 • 2: WPA/WPA2 (volatile passphrase) • 11: WEP, key 1, hexadecimal passphrase, open system • 12: WEP, key 2, hexadecimal passphrase, open system • 13: WEP, key 3, hexadecimal passphrase, open system • 14: WEP, key 4, hexadecimal passphrase, open system • 15: WEP, key 1, ASCII passphrase, open system • 16: WEP, key 2, ASCII passphrase, open system • 17: WEP, key 3, ASCII passphrase, open system • 18: WEP, key 4, ASCII passphrase, open system • 21: WEP, key 1, hexadecimal passphrase, open system (volatile passphrase) • 22: WEP, key 2, hexadecimal passphrase, open system (volatile passphrase) • 23: WEP, key 3, hexadecimal passphrase, open system (volatile passphrase) • 24: WEP, key 4, hexadecimal passphrase, open system (volatile passphrase) • 25: WEP, key 1, ASCII passphrase, open system (volatile passphrase) • 26: WEP, key 2, ASCII passphrase, open system (volatile passphrase) • 27: WEP, key 3, ASCII passphrase, open system (volatile passphrase) • 28: WEP, key 4, ASCII passphrase, open system (volatile passphrase) • 31: WEP, key 1, hexadecimal passphrase, shared key • 32: WEP, key 2, hexadecimal passphrase, shared key • 33: WEP, key 3, hexadecimal passphrase, shared key • 34: WEP, key 4, hexadecimal passphrase, shared key • 35: WEP, key 1, ASCII passphrase, shared key • 36: WEP, key 2, ASCII passphrase, shared key • 37: WEP, key 3, ASCII passphrase, shared key • 38: WEP, key 4, ASCII passphrase, shared key • 41: WEP, key 1, hexadecimal passphrase, shared key (volatile passphrase) • 42: WEP, key 2, hexadecimal passphrase, shared key (volatile passphrase) • 43: WEP, key 3, hexadecimal passphrase, shared key (volatile passphrase) • 44: WEP, key 4, hexadecimal passphrase, shared key (volatile passphrase) • 45: WEP, key 1, ASCII passphrase, shared key (volatile passphrase) • 46: WEP, key 2, ASCII passphrase, shared key (volatile passphrase) • 47: WEP, key 3, ASCII passphrase, shared key (volatile passphrase) • 48: WEP, key 4, ASCII passphrase, shared key (volatile passphrase)

<psk>	String	Security passphrase. The security passphrase length depends on <psk> parameter value:
		• if <psk> = 1, 2 (WPA/WPA2) from 8 to 64 characters
		• if <psk> = 11-14, 21-24, 31-34, 41-44 (hexadecimal passphrase) 10 or 26 hexadecimal digits (64-bit and 128-bit encryption)
		• if <psk> = 15-18, 25-28, 35-38, 45-48 (ASCII passphrase) 5 or 13 ASCII characters (64-bit and 128-bit encryption); allowed characters are printable ASCII characters, expect for:
		  o Apostrophe ('), code 0x27
		  o Quotation mark ("), code 0x22
		  o Grave accent (`), code 0x60

38.6.4 Notes

- It is not possible to change the external hotspot if the module is already connected with another external hotspot; AT+UWSTACFG=0 command shall be issued before reconfiguring the hotspot settings.

TOBY-L200-02S / TOBY-L210-02S / TOBY-L280-02S

- The range of <security> parameter is 0-1.

TOBY-L210-62S / TOBY-L220

- The range of <security> parameter is 0-2.

38.7 Wi-Fi station network layer configuration +UWSTAIPCFG

+UWSTAIPCFG						
Modules	TOBY-L200-02S TOBY-L200-03A TOBY-L200-03S TOBY-L201-02S TOBY-L210-02S TOBY-L210-03A TOBY-L210-03S TOBY-L210-62S TOBY-L220 TOBY-L280					
Attributes	**Syntax**	**PIN required**	**Settings saved**	**Can be aborted**	**Response time**	**Error reference**
	full	No	NVM	No	-	+CME Error

38.7.1 Description

Configures the network layer parameters of the Wi-Fi station. The network layer configuration can be obtained from the DHCP server of the external hotspot. Otherwise, this command can specify a static IP address, netmask, gateway IP address, and IP addresses of two DNS servers.

This command also allows switching between cellular and Wi-Fi connectivity.

If <dhcp>=1 further parameters can be omitted and are not taken into account when given.

☞ Reboot the Cellular / Wi-Fi subsystem or perform a complete power cycle of the STA Wi-Fi interface to apply the new configuration.

☞ The subnetwork of the station mode should be different from the subnetwork of the USB network function (e.g. RNDIS/CDC-ECM interface) and of the Wi-Fi access point. Use the +UIPCONF AT command to set the subnetwork of the USB network function and the +UWAPIPCFG AT command to set the subnetwork of the Wi-Fi access point. The connectivity between the three subnetworks is granted.

38.7.2 Syntax

Type	Syntax	Response	Example
Set	AT+UWSTAIPCFG=<routing>,<dhcp>[,<ip>,<netmask>,<gateway>,[<dns1>],[<dns2>]]	OK	AT+UWSTAIPCFG=1,0,"10.254.0.100","255.255.0.0","10.254.0.1","8.8.8.8","208.67.222.222" OK
Read	AT+UWSTAIPCFG?	+UWSTAIPCFG: <routing>,<dhcp>[,<ip>,<netmask>,<gateway>,<dns1>,<dns2>] OK	+UWSTAIPCFG: 1,0,"192.168.254.100","255.255.255.0","192.168.254.1","192.168.254.1","192.168.254.1" OK
Test	AT+UWSTAIPCFG=?	+UWSTAIPCFG: (list of supported <routing>s),(list of supported <dhcp>s),<ip>,<netmask>,<gateway>,<dns1>,<dns2> OK	+UWSTAIPCFG: (0,1),(0,1),"192.168.254.100","255.255.255.0","192.168.254.1","192.168.254.1","192.168.254.1" OK

38.7.3 Defined values

Parameter	Type	Description
<routing>	Number	Configures the connectivity type: • 0: the connectivity is provided by the cellular network • 1 (factory-programmed value): the connectivity is provided by an external hotspot
<dhcp>	Number	Configures the automatic DHCP IP address configuration of the wireless STA interface (the DHCP client is enabled on the STA interface). Allowed values: • 0: disabled • 1 (factory-programmed value): enabled
<ip>	String	IP address of the station. The address must not be a network or broadcast address (see Notes for more details).
<netmask>	String	IP netmask of the station. The netmask must be a valid address.
<gateway>	String	IP address of the gateway. The address must not be a network or broadcast address (see Notes for more details).
<dns1>	String	IP address of the first DNS server. The default value is an empty string.

Parameter	Type	Description
		If the parameter belongs to the IP/netmask network, it must not be a network or broadcast address.
<dns2>	String	IP address of the second DNS server. The default value is an empty string. If the parameter belongs to the IP/netmask network, it must not be a network or broadcast address.

38.7.4 Notes

- If <dhcp>=1 and the STA interface is associated to the external access point, the read command will provide the IP configuration of the STA interface (IP address, netmask, gateway, IP address of the first DNS server and IP address of the second DNS server).
- The read command does not return the optional parameters if the module cannot connect in STA mode to the Wi-Fi network. When the connection of the STA interface is lost, a timeout of 10 s is required to update the status.
- In the "network" address the last 32-(maskbit) bits are all set to 0.
- In the "broadcast" address the last 32-(maskbit) bits are all set to 1.
- The IP address should not be equal to a "network" or "broadcast" address.
- The maskbit is the prefix size of the subnet mask in CIDR (Classless Inter-Domain Routing) notation expressed as a decimal number (see RFC 1518 [146] and RFC 1519 [147]).
- The change of the <routing> value resets the ICMP timeout (for more details see the AT+UIPTABLES command).

38.8 Wi-Fi station signal level indicator +UWSTACSQ

+UWSTACSQ						
Modules	TOBY-L200-03A TOBY-L200-03S TOBY-L201-02S TOBY-L210-03A TOBY-L210-03S TOBY-L280-03A TOBY-L280-03S					
Attributes	**Syntax**	**PIN required**	**Settings saved**	**Can be aborted**	**Response time**	**Error reference**
	full	No	No	No	-	+CME Error

38.8.1 Description

Shows the signal level of the received packets by the Wi-Fi station interface. To be noticed that:

- An error result code will be provided if the Wi-Fi station is not enabled
- The information text response will be empty if the Wi-Fi station is enabled but it is not still associated to a Wi-Fi access point

38.8.2 Syntax

Type	Syntax	Response	Example
Read	AT+UWSTACSQ?	[+UWSTACSQ: <last_beacon_pkt>,<average_beacon_pkt>,<last_data_pkt>,<average_data_pkt>] OK	+UWSTACSQ: -75,-72,-70,-72 OK

38.8.3 Defined values

Parameter	Type	Description
<last_beacon_pkt>	Number	Signal level (dBm) of the last received beacon packet. The range goes from -25 to -94.
<average_beacon_pkt>	Number	Average signal level (dBm) of received beacon packets. The range goes from -25 to -94.
<last_data_pkt>	Number	Signal level (dBm) of the last received data packet. The range goes from -25 to -94.
<average_data_pkt>	Number	Average signal level (dBm) of received data packets. The range goes from -25 to -94.

38.9 Wi-Fi access point connected stations list +UWAPSTALIST

+UWAPSTALIST						
Modules	TOBY-L200-02S TOBY-L200-03A TOBY-L200-03S TOBY-L201-02S TOBY-L210-02S TOBY-L210-03A TOBY-L210-03S TOBY-L210-62S TOBY-L220 TOBY-L280					
Attributes	**Syntax**	**PIN required**	**Settings saved**	**Can be aborted**	**Response time**	**Error reference**
	full	No	No	No	-	+CME Error

38.9.1 Description

Lists all the stations connected to the Wi-Fi access point.

38.9.2 Syntax

Type	Syntax	Response	Example
Read	AT+UWAPSTALIST?	[+UWAPSTALIST: <mac>, <received_signal_level> [..]] OK	+UWAPSTALIST: "01:23:45:67:89:ab",-44 +UWAPSTALIST: "01:23:45:67:89:cd",-53 OK

38.9.3 Defined values

Parameter	Type	Description
<mac>	String	MAC address of the station
<received_signal_level>	Number	Received signal level expressed in dBm. The range goes from -30 to -94

38.10 Wi-Fi access point MAC address +UWAPMACADDR

+UWAPMACADDR						
Modules	TOBY-L200-02S TOBY-L200-03A TOBY-L200-03S TOBY-L201-02S TOBY-L210-02S TOBY-L210-03A TOBY-L210-03S TOBY-L210-62S TOBY-L220 TOBY-L280					
Attributes	**Syntax**	**PIN required**	**Settings saved**	**Can be aborted**	**Response time**	**Error reference**
	full	No	No	No	-	+CME Error

38.10.1 Description

Shows the Wi-Fi access point MAC (physical) address. The same MAC address is also valid for the station mode.

☞ An error result code is provided when the Wi-Fi module is disabled.

38.10.2 Syntax

Type	Syntax	Response	Example
Action	AT+UWAPMACADDR	+UWAPMACADDR: <access_point_MAC_address> OK	+UWAPMACADDR: "00:06:C6:38:1A:B2" OK
Test	AT+UWAPMACADDR=?	OK	

38.10.3 Defined values

Parameter	Type	Description
<access_point_MAC_address>	String	Access point MAC (physical) address.

38.11 Web user interface configuration +UWWEBUI

+UWWEBUI						
Modules	TOBY-L200-02S TOBY-L200-03A TOBY-L200-03S TOBY-L201-02S TOBY-L210-02S TOBY-L210-03A TOBY-L210-03S TOBY-L210-62S TOBY-L220 TOBY-L280					
Attributes	**Syntax**	**PIN required**	**Settings saved**	**Can be aborted**	**Response time**	**Error reference**
	full	No	NVM	No	-	+CME Error

38.11.1 Description

Configures the access to the Web user interface. See Web User Interface (WebUI) for a complete description of Web user interface.

38.11.2 Syntax

Type	Syntax	Response	Example
Set	AT+UWWEBUI=<action>	OK	AT+UWWEBUI=1 OK
Read	AT+UWWEBUI?	+UWWEBUI: <action> OK	+UWWEBUI: 1 OK
Test	AT+UWWEBUI=?	+UWWEBUI: (list of supported <action>s) OK	+UWWEBUI: (0,1) OK

38.11.3 Defined values

Parameter	Type	Description
<action>	Number	Configures the access to the Web graphical access. Allowed values: • 0 (factory-programmed value): disabled. Access to the Web user interface is not allowed • 1: enabled. Access to the Web user interface is allowed

38.12 Web user interface customization through FTP service +UWWEBUIFTP

+UWWEBUIFTP						
Modules	TOBY-L200-02S TOBY-L200-03A TOBY-L200-03S TOBY-L201-02S TOBY-L210-02S TOBY-L210-03A TOBY-L210-03S TOBY-L210-62S TOBY-L220 TOBY-L280					
Attributes	**Syntax**	**PIN required**	**Settings saved**	**Can be aborted**	**Response time**	**Error reference**
	full	No	NVM	No	-	+CME Error

38.12.1 Description

Enables or disables the FTP access to certain files of the HTTP server running the Web user interface, in particular HTML pages, CSS stylesheets/images, templates and some config files. The access to the web pages of the HTTP server allows the customization of the user interface layout.

The accessible parts are put in the data partition of the module. The Web user interface can be customized even if it is disabled. See Web User Interface (WebUI) for a complete description of the Web user interface.

The FTP access is configurable using this AT command and also on the web page itself. Once the FTP access is enabled, an external FTP client should be used to access the Web user interface data/files.

This AT command and the Web user interface can also be used to revert the Web user interface to the factory-programmed style.

Web page settings for the customization feature can be found on the Settings -> System page of the WebUI. It provides the same options as the AT command, plus a control to clear the template cache. The latter forces the template system to be visible immediately.

38.12.2 Syntax

Type	Syntax	Response	Example
Set	AT+UWWEBUIFTP=<status>	OK	AT+UWWEBUIFTP=1 OK
Read	AT+UWWEBUIFTP?	+UWWEBUIFTP: <status> OK	+UWWEBUIFTP: 1 OK
Test	AT+UWWEBUIFTP=?	+UWWEBUIFTP: (list of supported <status>s) OK	+UWWEBUIFTP: (0-2) OK

38.12.3 Defined values

Parameter	Type	Description
<status>	Number	Configures the access to the Web graphical access. Allowed values: • 0 (factory-programmed value): disabled. Access to the Web user interface is not allowed • 1: enabled. Access to the Web user interface through FTP service is allowed • 2: revert the factory-programmed Web user interface; this value is not stored; the previous <status> remains stored in NVM

38.13 Wi-Fi module firmware reset +UWFWRESET

+UWFWRESET						
Modules	TOBY-L200-02S TOBY-L200-03A TOBY-L200-03S TOBY-L201-02S TOBY-L210-02S TOBY-L210-03A TOBY-L210-03S TOBY-L210-62S TOBY-L220 TOBY-L280					
Attributes	**Syntax**	**PIN required**	**Settings saved**	**Can be aborted**	**Response time**	**Error reference**
	full	No	No	No	-	+CME Error

38.13.1 Description

Resets all the configuration parameters listed in Table 85 to their factory-programmed settings and automatically restarts the system.

38.13.2 Syntax

Type	Syntax	Response	Example
Set	AT+UWFWRESET=<reset>	OK	AT+UWFWRESET=1 OK
Test	AT+UWFWRESET=?	+UWFWRESET: (list of supported <reset>s) OK	+UWFWRESET: (1) OK

38.13.3 Defined values

Parameter	Type	Description
<reset>	Number	Allowed value: • 1: reset user configuration

38.13.4 Notes

A graphical user interface (WebUI) allows the configuration of some parameters. The +UWFWRESET AT command resets the parameters set both with WebUI and the AT command interface. The +UWFWRESET AT command does not revert the layout of the WebUI to the factory-programmed one. The latter operation should be performed with the +UWWEBUIFTP AT command; see the command description for further information regarding the WebUI revert operation.

Parameter	Configurable with	Description
<ssid>	+UWAPCFG, +UWSTACFG, WebUI	ESSID of the wireless network
<security>	+UWAPCFG, +UWSTACFG, WebUI	Wireless authentication type

Parameter	Configurable with	Description
<psk>	+UWAPCFG, +UWSTACFG, WebUI	Security passphrase
<region>	+UWAPCFG, WebUI	Country code
<channel>	+UWAPCFG, +UWTEST, WebUI	Wireless channel
<mode>	+UWAPCFG, WebUI	IEEE standard protocol
<enable>	+UWSTACFG, WebUI	Wireless station mode
<ip>	+UWAPIPCFG, +UWSTAIPCFG, WebUI	IP address of the wireless interface
<netmask>	+UWAPIPCFG, +UWSTAIPCFG, WebUI	Netmask of the wireless interface
<dhcp_start>	+UWAPIPCFG	Start IP address of the DHCP server range
<dhcp_stop>	+UWAPIPCFG	Stop IP address of the DHCP server range
<routing>	+UWSTAIPCFG	Preferred routing configuration
<dhcp>	+UWSTAIPCFG, WebUI	DHCP client configuration
<gateway>	+UWSTAIPCFG, WebUI	Gateway IP address
<dns1>	+UWSTAIPCFG, WebUI	Primary DNS
<dns2>	+UWSTAIPCFG, WebUI	Secondary DNS
<mac>	+UWAPSTALIST	Wireless station MAC
<received_signal_level>	+UWAPSTALIST	Received signal level from wireless clients
<reset>	+UWFWRESET, WebUI	Enable factory-programmed reset
<wifi_mode>	+UWCFG	Wireless power mode configuration
<mgr>	+UWCFG, WebUI	Connection manager mode
<band>	+UWTEST, WebUI	Wireless band
<rate>	+UWTEST, WebUI	Channel bit rate
<power>	+UWTEST, WebUI	Transmission power of the wireless interface
<test_mode>	+UWTEST, WebUI	Test mode
<bw>	+UWTEST, WebUI	Channel bandwidth
WebUI password	WebUI	WebUI password
Network profile	WebUI	List of available network profiles for the SIM card
Connection name	WebUI	Name to identify specific cellular network configuration
Reset counter	WebUI	
Language	WebUI	Language setting of the WebUI
System reset	WebUI	System reboot
APN	WebUI	Access Point Name
Roaming	WebUI	Roaming configuration
PIN	WebUI	PIN entry
User	WebUI	User name, if requested by the cellular provider
Password	WebUI	Password, if requested by the cellular provider
Authentication	WebUI	Authentication mode if a user name and password are required

Table 85: List of parameters updated with +UWFWRESET

38.14 Wi-Fi network scan +UWSCAN

+UWSCAN						
Modules	TOBY-L200-02S TOBY-L200-03A TOBY-L200-03S TOBY-L201-02S TOBY-L210-02S TOBY-L210-03A TOBY-L210-03S TOBY-L210-62S TOBY-L220 TOBY-L280					
Attributes	**Syntax**	**PIN required**	**Settings saved**	**Can be aborted**	**Response time**	**Error reference**
	full	No	No	No	< 15 s	+CME Error

38.14.1 Description

Scans the surroundings for wireless networks and provide information on their configuration. The information text response returns one or more lines providing networks in the immediate surroundings.

38.14.2 Syntax

Type	Syntax	Response	Example
Action	AT+UWSCAN	+UWSCAN: <bssid>,<op_mode>,<ssid>,<channel>,<received_signal_level>,<authentication_suites>[,<unicast_ciphers>,<group_ciphers>] [...] OK	+UWSCAN: "45:94:FC:7D:88:21",1,"test1",1,-72,18,4,4 +UWSCAN: "44:94:FC:7A:89:20",1,"test2",11,-83,18,4,4 +UWSCAN: "44:04:FC:7D:88:20",1,"test3",9,-48,0 +UWSCAN: "44:95:FC:7E:88:20",2,"test4",6,-83,0 OK

38.14.3 Defined values

Parameter	Type	Description
<bssid>	String	The MAC address of the external hotspot
<op_mode>	Number	Operation mode of the external hotspot • 1: infrastructured • 2: ad-hoc
<ssid>	String	The SSID name of external wireless network
<channel>	Number	The channel the external wireless network
<received_signal_level>	Number	Signal strength value for the external wireless network in dBm
<authentication_suites>	Number	Authentication suite supported by the external wireless network. The number is presented as a hexadecimal value; the meaning of each bit is as follows: • Bit 0: shared secret • Bit 1: PSK • Bit 2: EAP • Bit 3: WPA • Bit 4: WPA2 FF string is provided if an unsupported authentication suite is supported by the external wireless network (i.e. enterprise authentication level).
<unicast_ciphers>	Number	Unicast ciphers supported by the external wireless network. The number is presented as a hexadecimal value; the meaning of each bit is as follows: • Bit 2: TKIP • Bit 3: AES/CCMP
<group_ciphers>	Number	Group ciphers supported by the external wireless network. The number is presented as a hexadecimal value; the meaning of each bit is as follows: • Bit 2: TKIP • Bit 3: AES/CCMP

38.14.4 Notes

- <authentication_suites>=FF is provided if an unsupported authentication suite is in use by the external wireless network (i.e. enterprise authentication level).

38.15 Maximum allowed output power configuration +UWMP

+UWMP						
Modules	TOBY-L200-02S TOBY-L200-03A TOBY-L200-03S TOBY-L201-02S TOBY-L210-02S TOBY-L210-03A TOBY-L210-03S TOBY-L210-62S TOBY-L220 TOBY-L280					
Attributes	**Syntax**	**PIN required**	**Settings saved**	**Can be aborted**	**Response time**	**Error reference**
	partial	No	No	No	-	+CME Error

38.15.1 Description

Configures the maximum allowed output (transmission) power of the Wi-Fi module.

☞ The configuration is applied at run time.

38.15.2 Syntax

Type	Syntax	Response	Example
Set	AT+UWMP=<max_output_power>	OK	AT+UWMP=4 OK
Read	AT+UWMP?	+UWMP: <max_output_power> OK	+UWMP: 4 OK
Test	AT+UWMP=?	+UWMP: (list of supported <max_output_power>s) OK	+UWMP: (4-18) OK

38.15.3 Defined values

Parameter	Type	Description
<max_output_power>	Number	Output power in dBm. Allowed range is in: • TOBY-L200-02S / TOBY-L210-02S / TOBY-L210-62S / TOBY-L220 / TOBY-L280-02S - [4,18]. The default value is 18. • TOBY-L200-03A / TOBY-L200-03S / TOBY-L201-02S / TOBY-L210-03A / TOBY-L210-03S / TOBY-L280-03A / TOBY-L280-03S - [4,17]. The default value is 17. On TOBY-L200-03S-00, TOBY-L201-02S-00, TOBY-L210-03S-00, TOBY-L280-03S-00 the range goes from 4 to 18. The default value is 18.

38.16 Wi-Fi regulatory domains block configuration +UWREGBLOCK

+UWREGBLOCK						
Modules	TOBY-L200-02S TOBY-L200-03A TOBY-L200-03S TOBY-L201-02S TOBY-L210-02S TOBY-L210-03A TOBY-L210-03S TOBY-L210-62S TOBY-L220 TOBY-L280					
Attributes	**Syntax**	**PIN required**	**Settings saved**	**Can be aborted**	**Response time**	**Error reference**
	full	No	NVM	No	-	+CME Error

38.16.1 Description

Configures the Wi-Fi regulatory domains block feature.

Since every country applies its own regulations regarding the use of Wi-Fi networks, the Wi-Fi regulatory domains block feature avoids conflicts with the Wi-Fi limitations of the countries where the module will be used. The Wi-Fi regulatory domains block feature is enabled when the Wi-Fi interface is active or when the WebUI is enabled.

Three regulatory domains are defined:

- **"US"** (United States): with the Wi-Fi regulatory domains block feature, this regulatory domain is automatically applied when the module is registered to a North American cellular network;
- **"JP"** (Japan): with the Wi-Fi regulatory domains block feature, this regulatory domain is automatically applied when the module is registered to a Japanese cellular network;
- **"EU"** (Europe / rest of the world): with the Wi-Fi regulatory domains block feature, this regulatory domain is automatically applied when the module is not registered to a North American or a Japanese cellular network.

The limitations defined for every regulatory domain regard the list of available channels, the maximum transmission power and the channel bit rate. In particular, if the previously selected channel falls outside the allowed range of the currently applied domain, an automatic channel selection will be adopted. Further information regarding the allowed settings for every regulatory domain can be found in the +UWAPCFG AT command description.

The Wi-Fi regulatory domains block implies the following behavior:

- TOBY-L200 / TOBY-L201 - work in "US" regulatory domain and the domain cannot change;
- TOBY-L210 / TOBY-L280 - start with "EU" regulatory domain as factory-programmed value;
- TOBY-L220 - start with "JP" regulatory domain as factory-programmed value;

- TOBY-L210 / TOBY-L220 / TOBY-L280 - when the module is out of coverage/not registered to any network (this implies that the current position of the module is unknown), the regulatory domain is automatically reverted to the "US" regulatory domain, which is the most restrictive in terms of channel usage, after a configurable <timeout>:
  - the factory-programmed value of the timeout is 60 minutes;
  - the timeout can be set from a minimum value of 10 minutes to a maximum of 60 minutes.
  - during the period in which the module is out-of-coverage/not registered to any network (this implies that the current position of the module is unknown) and the timeout is not elapsed, the physical Wi-Fi setting can differ from the setting shown by the +UWAPCFG AT command. The user is able to change the setting referred to the new valid regulatory domain, even if it is not applied. A complete Wi-Fi power cycle will apply the new setting and the timeout will not be taken into account.

The last applied regulatory domain is stored in NVM and it is used for the next Wi-Fi activation; the current regulatory domain can be derived from the <region> parameter returned by +UWAPCFG read command.

38.16.2 Syntax

Type	Syntax	Response	Example
Set	AT+UWREGBLOCK=[<timeout>]	OK	AT+UWREGBLOCK=10 OK
Read	AT+UWREGBLOCK?	+UWREGBLOCK: <timeout> OK	+UWREGBLOCK: 10 OK
Test	AT+UWREGBLOCK=?	+UWREGBLOCK: (list of supported <timeout>s) OK	+UWREGBLOCK: (10-60) OK

38.16.3 Defined values

Parameter	Type	Description
<timeout>	Number	Duration (in minutes) of the timer set when the module enters in out-of-coverage/ not registered state; at its expiration, the Wi-Fi regulatory domain is automatically reverted to "US". The range goes from 10 to 60; the factory-programmed and default value is 60.

38.17 Wi-Fi test mode +UWTEST

+UWTEST						
Modules	TOBY-L200-02S TOBY-L200-03A TOBY-L200-03S TOBY-L201-02S TOBY-L210-02S TOBY-L210-03A TOBY-L210-03S TOBY-L210-62S TOBY-L220 TOBY-L280					
Attributes	**Syntax**	**PIN required**	**Settings saved**	**Can be aborted**	**Response time**	**Error reference**
	full	No	No	No	-	+CME Error

38.17.1 Description

Initiates the Wi-Fi module test mode. A reboot of the Wi-Fi / cellular subsystem is needed to exit the test mode. Performs one of these procedures to exit from the test mode:

- Reboot the Wi-Fi / cellular subsystem with the +CFUN command
- Set the Wi-Fi power mode by the use of +UWCFG AT command

If the Wi-Fi / cellular subsystem is rebooted when it is in test mode, at the next boot the Wi-Fi module power mode is disabled; to turn it on issue the +UWCFG=1 command.

38.17.2 Syntax

Type	Syntax	Response	Example
Set	AT+UWTEST=<password>,<band>,<channel>,<rate>,<power>,<test_mode>,<bw>	OK	AT+UWTEST="password",0,1,1,13,3,0 OK
Read	AT+UWTEST?	+UWTEST: <version> OK	+UWTEST: "SD8787-14.44.35.p238-M2614525-GPL-(FP44)"

Type	Syntax	Response	Example
			OK
Test	AT+UWTEST=?	+UWTEST: "",(list of supported <band>s),(list of supported <channel>s),(list of supported <rate>s),(list of supported <power>s),(list of supported <test_mode>s),(list of supported <bw>s) OK	+UWTEST: "",(0),(1-14),(1-4,6-22),(6-18),(0-3),(0,1) OK

38.17.3 Defined values

Parameter	Type	Description
<password>	String	The command is password protected. The password is provided by u-blox.
<band>	Number	Wi-Fi band. Allowed values: • 0: 2.4 GHz band
<channel>	Number	1-14: 2.4 GHz RF channel
<rate>	Number	Data rate. Allowed values: • 1-4: 1/2/5.5/11 Mb/s DSSS • 6-14: 6/9/12/18/24/36/48/54/72 Mb/s OFDM • 15-22: MCS0-7
<power>	Number	Output power. Allowed values: • 6-18: Tx power in dBm
<test_mode>	Number	Test mode. Allowed values: • 0: reserved • 1: packet Tx • 2: continuous modulated Tx • 3: carrier mode (no modulation)
<bw>	Number	Channel bandwidth. Allowed values: • 0: 20 MHz bandwidth • 1: 40 MHz bandwidth
<version>	Number	Firmware version of Wi-Fi module

38.17.4 Notes

TOBY-L200-00S / TOBY-L201-01S / TOBY-L210-00S / TOBY-L210-60S / TOBY-L210-62S / TOBY-L220

- The <password> parameter is not supported.

A Appendix: Error result codes

A.1 Mobile termination error result codes +CME ERROR

Numeric error code	Description
0	Phone failure
1	No connection to phone
2	Phone-adaptor link reserved
3	Operation not allowed
4	Operation not supported
5	PH-SIM PIN required
10	SIM not inserted
11	SIM PIN required
12	SIM PUK required
13	SIM failure
14	SIM busy
15	SIM wrong
16	Incorrect password
17	SIM PIN2 required
18	SIM PUK2 required
20	Memory full
21	Invalid index
22	Network not found
23	Memory failure
24	Text string too long
25	Invalid characters in text string
26	Dial string too long
27	Invalid characters in dial string
30	No network service
31	Network timeout
32	Network not allowed - emergency calls only
40	Network personalisation PIN required
41	Network personalisation PUK required
42	Network subset personalisation PIN required
43	Network subset personalisation PUK required
44	Service provider personalisation PIN required
45	Service provider personalisation PUK required
46	Corporate personalisation PIN required
47	Corporate personalisation PUK required
50	Incorrect parameters
51	Command implemented but currently disabled
52	Command aborted by user
53	Parameters are invalid
100	Unknown
103	Illegal MS
106	Illegal ME
107	GPRS services not allowed
108	GPRS and non GPRS services not allowed
111	PLMN not allowed
112	Location area not allowed
113	Roaming not allowed in this location area
114	GPRS services not allowed in this PLMN
115	No Suitable Cells In Location Area
122	Congestion

Numeric error code	Description
125	Not authorized for this CSG
126	Insufficient resources
132	Service option not supported
133	Requested service option not subscribed
134	Service option temporarily out of order
135	NS-api already used
140	Feature not supported
141	Semantic error in the TFT operation
142	Syntactical error in the TFT operation
143	Unknown PDP context
144	Semantic errors in packet filter(s)
145	Syntactical errors in packet filter(s)
146	PDP context without TFT already activated
148	Unspecified GPRS error
149	PDP authentication failure
150	Invalid mobile class
156	User Busy
159	Uplink Busy/ Flow Control
172	Semantically incorrect message
173	Mandatory information element error
174	Information element non-existent or not implemented
175	Conditional IE error
176	Protocol error, unspecified
254	Invalid error mapping
255	Internal error
300	ME failure
301	SMS service of ME reserved
302	Operation not allowed
303	Operation not supported
304	Invalid PDU mode parameter
305	Invalid text mode parameter
310	(U)SIM not inserted
311	(U)SIM PIN required
312	PH-(U)SIM PIN required
313	(U)SIM failure
314	(U)SIM busy
315	(U)SIM wrong
316	(U)SIM PUK required
317	(U)SIM PIN2 required
318	(U)SIM PUK2 required
320	Memory failure
321	Invalid memory index
322	Memory full
330	SMSC address unknown
331	No network service
332	Network timeout
340	No +CNMA acknowledgement expected
500	Unknown error
608	Voice call active
701	Incorrect security code
702	Max attempts reached
1001	Unassigned (unallocated) number
1003	No route to destination
1006	Channel unacceptable
1008	Operator determined barring

Numeric error code	Description
1016	Normal call clearing
1017	User busy
1018	No user responding
1019	User alerting, no answer
1021	Call rejected
1022	Number changed
1026	Non selected user clearing
1027	Destination out of order
1028	Invalid number format (incomplete number)
1029	Facility rejected
1030	Response to STATUS ENQUIRY
1031	Normal, unspecified
1034	No circuit/channel available
1038	Network out of order
1041	Temporary failure
1042	Switching equipment congestion
1043	Access information discarded
1044	requested circuit/channel not available
1047	Resources unavailable, unspecified
1049	Quality of service unavailable
1050	Requested facility not subscribed
1055	Incoming calls barred within the CUG
1057	Bearer capability not authorized
1058	Bearer capability not presently available
1063	Service or option not available, unspecified
1065	Bearer service not implemented
1068	ACM equal to or greater than ACMmax
1069	Requested facility not implemented
1070	Only restricted digital information bearer capability is available
1079	Service or option not implemented, unspecified
1081	Invalid transaction identifier value
1087	User not member of CUG
1088	Incompatible destination
1091	Invalid transit network selection
1095	Semantically incorrect message
1096	Invalid mandatory information
1097	Message type non-existent or not implemented
1098	Message type not compatible with protocol state
1099	Information element non-existent or not implemented
1100	Conditional IE error
1101	Message not compatible with protocol state
1102	Recovery on timer expiry
1111	Protocol error, unspecified
1127	Interworking, unspecified
1279	Number not allowed
1283	CCBS possible
1500	Wrong GPIO identifier
1501	Set GPIO default error
1502	Select GPIO mode error
1503	Read GPIO error
1504	Write GPIO error
1505	GPIO busy
1520	Wrong ADC identifier
1521	Read ADC error
1530	IPv4 only allowed

Numeric error code	Description
1531	IPv6 only allowed
1540	Wrong ringer identifier
1542	LLC or SNDCP failure
1543	Regular deactivation
1544	Reactivation requested
1545	Single address bearers only allowed
1546	Invalid transaction identifier value
1547	APN restriction val incompatible with PDP context
1548	PDP activation rejected
1549	unknown PDP address or PDP type
1550	GPRS generic operation error
1551	GPRS invalid APN
1552	GPRS authentication failure
1553	GPRS QoS parameters inconsistent
1554	GPRS network failure
1555	GPRS context busy
1556	CSD generic operation error
1557	CSD undefined profile
1558	CSD context busy
1559	PLMN scan not allowed
1600	FFS error
1560	PDP type IPv4 only allowed
1561	PDP type IPv6 only allowed
1612	FILE NOT FOUND
1613	Cannot open file
1620	Buffer full
1621	FFS initializing
1622	FFS already open file
1623	FFS not open file
1624	FFS file not found
1625	FFS file already created
1626	FFS illegal id
1627	FFS illegal file handle
1628	FFS illegal type
1629	FFS illegal mode
1630	FFS file range
1631	FFS operation not possible
1632	FFS write error
1633	FFS user id error
1634	FFS internal fatal error
1635	FFS memory resource error
1636	FFS maximum number of files exceeded
1637	FFS memory not available
1638	FFS invalid filename
1639	FFS streaming not enabled
1640	FFS operation not allowed on static file
1641	FFS memory table inconsistency
1642	FFS not a factory default file
1643	FFS requested memory temporary not available
1644	FFS operation not allowed for a directory
1645	FFS directory space not available
1646	FFS too many streaming files open
1647	FFS requested dynamic memory temporary not available
1648	FFS user provided a NULL parameter instead of a suitable buffer
1649	FFS timeout

Numeric error code	Description
1650	Command line too long
1660	Call barred - Fixed dialing numbers only
1700	GPS GPIO not configured
1701	GPS GPIO ownership error
1702	Invalid operation with GPS ON
1703	Invalid operation with GPS OFF
1704	Invalid GPS aiding mode
1705	Reserved GPS aiding mode
1706	GPS aiding mode already set
1707	Invalid GPS trace mode
1708	Parameter valid only in case of GPS OTA
1709	GPS trace invalid server
1710	Invalid TimeZone
1711	Invalid value
1712	Invalid parameter
1713	Invalid operation with LOC running / GPS Busy
1801	IBM busy / eCall already armed/active
1802	IBM feature off / eCall feature off
1803	Wrong IBM requested
1804	Audio resource not available
1805	ECALL restriction
1806	eCall invalid dial number
1900	No SAP Server Connection
1901	SAP Protocol Error
1902	SAP Connection failure
1903	SAP Server Disconnection
1904	SAP Other terminal using service
1910	USECMNG import timeout expired (no input for > 20 s)
1911	USECMNG import file size exceeds limit
1912	USECMNG no memory available
1913	USECMNG invalid certificate/key format
1914	USECMNG database full
1950	CDC-ECM is not available
1951	CDC-ECM is busy
1952	No DHCP Packets received from the DTE
2000	Command timeout
3000	Command aborted
4000	APN configuration mismatch
4001	IP type configuration mismatch

A.2 Message service error result codes +CMS ERROR

Numeric error code	Description
1	Unassigned (unallocated) number
5	Delta firmware unavailable on FOTA server
8	Operator determined barring
10	Call barred
17	Network failure
21	Short message transfer rejected
22	Memory capacity exceeded
27	Destination out of service
28	Unidentified subscriber
29	Facility rejected
30	Unknown Subscriber
38	Network out of order

Numeric error code	Description
41	Temporary failure
42	Congestion
47	Resources unavailable, unspecified
50	Requested facility not subscribed
69	Requested facility not implemented
81	Invalid short message reference value
95	Invalid message, unspecified
96	invalid mandatory information
97	Message type non-existent or not implemented
98	Message not compatible with short message protocol state
99	Information element non-existent or not implemented
111	Protocol error, unspecified
127	Interworking, unspecified
128	Telematic interworking not supported
129	Short message type 0 not supported
130	Cannot replace short message
143	Unspecified TP-PID error
144	Data coding scheme (alphabet) not supported
145	Message class not supported
159	Unspecified TP-DCS error
160	Command cannot be actioned
161	Command unsupported
175	Unspecified TP-Command error
176	TPDU not supported
192	SC busy
193	No SC subscription
194	SC system failure
195	Invalid SME address
196	Destination SME barred
197	SM Rejected-Duplicate SM
198	TP-VPF not supported
199	TP-VP not supported
208	SIM SMS storage full
209	No SMS storage capability in SIM
210	Error in MS
211	Memory Capacity Exceeded
212	SIM Application Toolkit Busy
213	SIM data download error
287	Network failure unspecified
290	Network no resource
296	Radio Resources not Aailable due to DUAL SIM operation
297	Out of service due to DUAL SIM operation
300	ME failure
301	SMS service of ME reserved
302	Operation not allowed
303	operation not supported
305	Invalid Text mode parameter
310	SIM not inserted
311	SIM PIN required
312	PH-SIM PIN required
313	SIM failure
314	SIM busy
315	SIM wrong
320	memory failure
321	invalid memory index

Numeric error code	Description
322	memory full
330	SMSC address unknown
331	no network service
332	network timeout
340	no +CNMA acknowledgement expected
500	unknown error
512	Relay Protocol Acknowledgement
513	SMS timer expired
514	SMS forwarding availability failed
515	SMS forwarding availability aborted
516	MS invalid TP-Message-Type-Indicator
517	MS no TP-Status-Report in Phase 1
518	MS no TP-Reject-Duplicate in phase 1
519	MS no TP-Replay-Path in Phase 1
520	MS no TP-User-Data-Header in Phase 1
521	MS missing TP-Validity-Period
522	MS invalid TP-Service-Centre-Time-Stamp
523	MS missing TP-Destination-Address
524	MS invalid TP-Destination-Address
525	MS missing Service-Centre-Address
526	MS invalid Service-Centre-Address
527	MS invalid alphabet
528	MS invalid TP-User-Data-length
529	MS missing TP-User-Data
530	MS TP-User-Data to long
531	MS no Command-Request in Phase 1
532	MS Cmd-Req invalid TP-Destination-Address
533	MS Cmd-Req invalid TP-User-Data-Length
534	MS Cmd-Req invalid TP-User-Data
535	MS Cmd-Req invalid TP-Command-Type
536	MN MNR creation failed
537	MS CMM creation failed
538	MS network connection lost
539	MS pending MO SM transfer
540	RP-Error OK
541	RP-Error OK no icon display
542	SMS-PP Unspecified
543	SMS rejected By SMS CONTROL
544	Service Centre Address(SCA) FDN failed
545	Destination Address(DA) FDN failed
546	BDN check failed
547	Unspecified SMS PP error
548	Undefined Result
548	No Route To Destination
549	Channel Unacceptable
555	No Circuit/Channel Available
556	Access Information Discarded
557	Requested Circuit/Channel Not Available By Other Side
558	Quality Of Service Unavailable
560	Bearer Capability Not Authorized
561	Bearer Capability Not Presently Available
562	Service or Option Not Available, Unspecified
563	Bearer Service Not Implemented
564	ACM Equal to or Greater Than ACMmax
565	Only Restricted Digital Information Bearer Capability Is Available

Numeric error code	Description
566	Service or Option Not Implemented, Unspecified
567	User Not Member of CUG
568	Incompatible By Destination
569	Invalid Transit Network Selection
571	Message Not Compatible With Protocol State
572	Recovery On Timer Expiry
576	Data Call Active
577	Speech Call Active
579	MOC Setup Rejected Due to Missing ACM Info
580	Temporary Forbidden Call Attempt
581	Called Party is Blacklisted
583	Temporary Forbidden Call Attempt No Service
584	Temporary Forbidden Call Attempt Limited Service
585	Client Temporary Barred
586	Dual Service Call Active
587	Atc Fclass Not Speech
590	Client Not Registrated
591	Active Client Gone
595	Rejected By Call Control
601	Invalid ALS Line
604	MM No Service (out of coverage)
605	MM Access Class Barred (RR_REL_IND During RR Conn. Establishment)
606	ME Busy -CM Service Request Already Pending
608	Rejected Due To SUP Timer Expiry
609	Rejected Due To USSD Busy
610	Rejected Due To SS Busy
612	SIM Toolkit Request Is Rejected, Because Another SIM Toolkit Request Is Pending
614	Rejected Because SIM Toolkit Request Is Not Yet Answered By The User
615	MN Setup SS Error
616	Call Controller Blocked (Other Call Command Pending)
618	Environment Parameter Not Set Correctly (Fclass/Cmod)
619	Other Blocking Call Present
620	Lower Layer Failure
621	The Authentication Proedure Failed
622	The Packet-Switched Registration Procedure Failed
623	CM Service Reject From The Network
624	The ABORT Message Was Received From The Network
625	Timer Expiry
626	IMSI Deatch Was Initiated
627	Normal RR Connection Release (2G)
628	Registration Failed
630	Failure Due To Handover
631	Link Establishment Failure
632	Random Access Failure
633	Radio Link Aborted
634	Lower Layer Failure in Layer 1
635	Immediate Assignment Reject
636	Failure Due To Paging
637	Abnormal Release Unspecified
638	Abnormal Release Channel Unacceptable
639	Abnormal Release Timer Expired
640	Abnormal Release No Act On Radio Path
641	Preemptive Release
642	UTRAN Configuration Unknown

Numeric error code	Description
643	Handover Impossible
644	Channel Mode Unacceptable
647	Lower Layer Failure From NW
649	Conditional IE Error
650	No Cell Allocation Available
653	Re Establishment Reject
654	Directed Sigconn Re Establishment
656	Release of RRC connection Witout Network Activity(3G) Lower Layer Failure Downlink
657	Lower Layer Failure Uplink
658	Cell Barred Due To Authentication Failure
659	Signalling Connection Release
660	CS Connection Release Triggered By MM
661	RRC Connection Establishment Failure
662	RRC Connection Establsihment Reject With Redirection
663	Resource Conflict
664	Layer Layer Failure in Layer 2
665	L2 Cause T200 Expiry N200 Plus 1 Times
669	RR Connection Release Due to BAND Change (2G)
670	Release of the RRC Connection Due to Out of Service in Cell_Fach (3G)
671	Release of the RRC Connection Due to Not Matching PLMN in Shared Networks(3G)
672	Error Happens While Call Is Already Disconnected / Late Error
674	SIM Toolkit Cannot Initiate A Call, Because MMI Is Not Registered
675	SIM Toolkit Call Setup Request Is Rejected Due User Did Not Accept
676	Proactive SIM Appl Terminated By User
677	SIM Toolkit Originated SIM Reset (Refresh Request)
680	Dial String/Number Incorrect

A.3 +CEER error result codes

The following table lists the supported values for <cause> (number) and <error_description> (string) for +CEER AT command if <type> assumes one of these values:

- "CC setup error"
- "CC modification error"
- "CC release"
- "SM attach error"
- "SM detach"
- "SM activation error"
- "SM deactivation

In case the same <cause> values map to different <error_description> strings on the same product (see for instance <cause> 129 on SARA-G3 series), they obviously refer to different <type> values, related to CS call control or to PS session management failures.

<cause>	<error_description>	LEON-G1	SARA-G3	LISA-U2	SARA-U2	TOBY-L2 / MPCI-L2	LARA-R2 / TOBY-R2
0	No cause information available			x	x	x	x
1	Unassigned (unallocated) number	x	x	x	x	x	x
2	SIM not provisioned						x
3	No route to destination	x	x	x	x	x	x
3	SIM not allowed						x
4	Call Failed						x
5	Call Failed						x
6	Channel unacceptable	x	x	x	x	x	x
6	Phone not allowed						x
7	GPRS Service not allowed						x

<cause>	<error_description>	LEON-G1	SARA-G3	LISA-U2	SARA-U2	TOBY-L2 / MPCI-L2	LARA-R2 / TOBY-R2
8	Operator determined barring	x	x	x	x	x	x
8	GPRS Service and Non GPRS service not allowed						x
9	MS Identity cannot be Derived by network						x
10	Implicitly Detached						x
11	SOS/Emergency calls only,PLMN not allowed						x
12	SOS/Emergency calls only,LA not allowed						x
13	SOS/Emergency calls only,roaming not allowed in LA						x
15	No Suitable cells in Location Area						x
16	Normal call clearing	x	x	x	x	x	x
16	MSC Temporarily Not Reachable						x
17	User busy	x	x	x	x	x	x
18	No user responding	x	x	x	x	x	x
19	User alerting, no answer	x	x	x	x	x	x
20	MAC (Message Authentication Code) failure						x
21	Call rejected	x	x	x	x	x	x
21	Synch failure						x
22	Number changed	x	x	x	x	x	x
22	Error Congestion						x
23	SIM not allowed						x
26	Non selected user clearing	x	x	x	x	x	x
27	Destination out of order	x	x	x	x	x	x
28	Invalid number format (incomplete number)	x	x	x	x	x	x
29	Facility rejected	x	x	x	x	x	x
30	Response to STATUS ENQUIRY	x	x	x	x	x	x
31	Normal, unspecified	x	x	x	x	x	x
32	Service Option Not supported						x
33	Requested Service option not subscribed						x
34	No circuit/channel available	x	x	x	x	x	x
34	Service temporarily out of order						x
38	Network out of order	x	x	x	x	x	x
38	Call cannot be Identified						x
40	NO PDP Context Active						x
41	Temporary failure	x	x	x	x	x	x
42	Switching equipment congestion	x	x	x	x	x	x
43	Access information discarded	x	x	x	x	x	x
44	Requested circuit/channel not available	x	x	x	x	x	x
47	Resources unavailable, unspecified	x	x	x	x	x	x
48	Retry on New Cell beginning						x
49	Quality of service unavailable	x	x	x	x	x	x
50	Requested facility not subscribed	x	x	x	x	x	x
55	Incoming calls barred within the CUG	x	x	x	x	x	x
57	Bearer capability not authorized	x	x	x	x	x	x
58	Bearer capability not presently available	x	x	x	x	x	x
63	Service or option not available, unspecified	x	x	x	x	x	x
63	Retry on New Cell End						x
65	Bearer service not implemented	x	x	x	x	x	x
68	ACM equal to or greater than ACMmax	x	x	x	x	x	x
69	Requested facility not implemented	x	x	x	x	x	x

<cause>	<error_description>	LEON-G1	SARA-G3	LISA-U2	SARA-U2	TOBY-L2 / MPCI-L2	LARA-R2 / TOBY-R2
70	Only restr. digital information bearer capability	x	x	x	x	x	x
79	Service or option not implemented, unspecified	x	x	x	x	x	x
81	Invalid transaction identifier value	x	x	x	x	x	x
87	User not member of CUG	x	x	x	x	x	x
88	Incompatible destination	x	x	x	x	x	x
91	Invalid transit network selection	x	x	x	x		
95	Semantically incorrect message	x	x	x	x	x	x
96	Invalid mandatory information	x	x	x	x		x
97	Message type non-existent or not implemented	x	x	x	x	x	x
98	Message type not compatible with protocol state	x	x	x	x	x	x
99	Information element non-existent or not implemented	x	x	x	x	x	x
100	Conditional IE error	x	x	x	x	x	x
101	Message not compatible with protocol state	x	x	x	x	x	x
102	Recovery on timer expiry	x	x	x	x	x	x
102	Unknown IMSI		x				
103	Illegal MS		x	x	x	x	x
106	Illegal ME		x	x	x	x	x
107	GPRS service not allowed		x	x	x	x	x
108	GPRS and non GPRS services not allowed		x				
108	Operator determined barring					x	
111	Protocol error, unspecified	x	x	x	x	x	x
111	PLMN not allowed					x	
112	Location area not allowed	x		x	x	x	x
113	Roaming not allowed in this location area	x		x	x	x	x
125	LLC or SNDCP failure		x				x
126	Insufficient resources		x			x	x
127	Missing or unknown APN		x		x	x	x
127	Interworking, unspecified	x	x	x	x	x	x
128	Unknown PDP address or PDP type					x	x
129	Outgoing calls barred within CUG	x	x				
129	User authentication failed		x			x	x
130	No CUG selected	x	x			x	
130	Activation rejected by GGSN, Serving GW or PDN GW					x	x
131	Unknown CUG index	x	x			x	
131	Activation reject,unspecified						x
132	CUG index incompatible with requested basic service	x	x				
132	Service not supported		x	x	x		x
133	CUG call failure, unspecified	x	x				
133	Requested service option not subscribed		x				x
133	Service not subscribed			x	x		
134	CLIR not subscribed	x	x				
134	Service option temporarily out of order		x	x	x		x
135	CCBS possible	x	x				
135	NSAPI already used		x			x	x
136	CCBS not possible	x	x				
136	Regular PDP context deactivation		x				x
137	QoS not accepted		x			x	x

<cause>	<error_description>	LEON-G1	SARA-G3	LISA-U2	SARA-U2	TOBY-L2 / MPCI-L2	LARA-R2 / TOBY-R2
138	Network failure		x			x	x
139	Reactivation requested						x
140	Feature not supported						x
141	Semantic error in the TFT operation						x
142	Syntactical error in the TFT operation						x
143	Unknown PDP context						x
144	Semantic errors in packet filter(s)						x
145	Syntactical errors in packet filter(s)						x
146	PDP context without TFT already activated						x
148	Unspecified GPRS error		x	x	x	x	x
149	PDP authentication error		x	x	x	x	x
152	Single address bearers only allowed						x
153	ESM information not received						x
154	PDN connection does not exist						x
155	Multiple PDN connections for a given APN not allowed						x
156	Collision with network initiated request						x
159	Unsupported QCI value						x
160	Bearer handling not supported						x
165	Maximum number of EPS bearers reached						x
166	Requested APN not supported in current RAT and PLMN combination						x
181	Invalid PTI value						x
182	APN restriction value incompatible with active EPS bearer context						x
183	PTI already in use						x
184	EPS QoS not accepted						x
185	Invalid EPS bearer identity						x
186	PTI mismatch						x
187	Last PDN disconnection not allowed						x
188	PDN type IPv4 only allowed						x
189	PDN type IPv6 only allowed						x
212	APN resriction						x
256	Internal, unspecified			x	x	x	x
257	Out of memory			x	x	x	x
258	Invalid parameters			x	x	x	x
259	Data call active			x	x		x
260	Speech call active			x	x		x
262	Missing ACM information			x	x		x
263	Temporary forbidden			x	x		x
264	Called party is blacklisted			x	x		x
265	Blacklist is full			x	x		x
266	No service			x	x		x
267	Limited service			x	x		x
268	Client conflict			x	x		x
269	Dual service call active			x	x		x
271	Unknown SIM error			x	x		x
274	Active Client is Gone			x	x		x
277	SIM status failure			x	x		x
278	Rejected by call control			x	x		x
279	FDN failed			x	x		x
280	BDN failed			x	x		x
283	CCBS possible			x	x		x

<cause>	<error_description>	LEON-G1	SARA-G3	LISA-U2	SARA-U2	TOBY-L2 / MPCI-L2	LARA-R2 / TOBY-R2
284	Invalid alternate service line						x
285	LND overflow			x	x		x
287	MM network failure unspecified			x	x		x
288	MM no service			x	x		x
289	MM access class barred			x	x		x
290	MM RR no resource			x	x		x
291	MM ME busy			x	x		x
292	MM unspecified			x	x		x
296	Dual sim radio conflict						x
297	No service due to dual sim radio conflict						x
301	MMI not registered			x	x		x
303	Rejected by user			x	x		x
304	Rejected due to time out			x	x		x
306	Disconnected due to SIM-Toolkit call setup			x	x		x
307	Pending SIM-Toolkit call setup			x	x		x
310	SIM reset			x	x		x
340	MM sapi3 release			x	x		x
341	MM lower layer failure			x	x		x
342	MM authentication failure			x	x		x
343	MM PS reject			x	x		x
344	MM service rejected			x	x		x
345	MM abort by network			x	x		x
346	MM timeout			x	x		x
347	MM detach			x	x		x
348	MM RR connection release			x	x		x
349	MM not registered			x	x		x
350	MM re-establishment failure			x	x		x
351	Failure due to handover			x	x		x
352	Link establishment failure			x	x		x
353	Random access failure			x	x		x
354	Radio link aborted			x	x		x
355	Lower layer failure in Layer 1			x	x		x
356	Immediate Assignment Reject			x	x		x
357	Failure due to paging			x	x		x
358	Abnormal release unspecified			x	x		x
359	Abnormal release channel unacceptable			x	x		x
360	Abnormal release timer expired			x	x		x
361	Abnormal release no act on radio path			x	x		x
362	Preemptive release			x	x		x
363	UTRAN configuration unknown			x	x		x
364	Handover impossible			x	x		x
365	Channel mode unacceptable			x	x		x
366	Frequency not implemented			x	x		x
367	Originator leaving call group area			x	x		x
368	Lower layer failure from network			x	x		x
369	Call already cleared			x	x		x
370	Semantically incorrect message			x	x		x
371	Invalid mandatory info			x	x		x
372	Message type non existing			x	x		x
373	Message type incompatible in state			x	x		x
374	Conditional information element error			x	x		x
375	No cell allocation available			x	x		x
376	Protocol error unspecified			x	x		x

<cause>	<error_description>	LEON-G1	SARA-G3	LISA-U2	SARA-U2	TOBY-L2 / MPCI-L2	LARA-R2 / TOBY-R2
377	Normal event			x	x		x
378	Unspecified			x	x		x
379	Preemptive release			x	x		x
380	Congestion			x	x		x
381	RE establishment reject			x	x		x
382	Directed sig conn establishment			x	x		x
383	User inactivity			x	x		x
384	Lower layer failure downlink			x	x		x
385	Lower layer failure uplink			x	x		x
386	Cell barred due to authentication failure			x	x		x
387	signalling connection release			x	x		x
388	CS connection release triggered by MM			x	x		x
389	RRC connection establishment failure			x	x		x
390	RRC connection establishment reject with redirection			x	x		x
391	resource conflict			x	x		x
392	Layer 2 sequence error			x	x		x
393	Layer 2 T200 exp N200 plus 1 times			x	x		x
394	Layer 2 unsolicited DM resp MFES			x	x		x
395	Layer 2 contention resolution			x	x		x
396	Layer 2 normal cause			x	x		x
397	RR connection release due to BAND change (2G)			x	x		x
400	MM RR connection error while release			x	x		x
500	Local user disconnect/normal call clearing			x	x		x
510	Remote user or NW disconnect\normal call clearing,during any other call state than "CALL PROCEEDING"			x	x		x
511	Remote user or NW disconnect\normal call clearing,during the call state "CALL PROCEEDING"			x	x		x
512	Request rejected, BCM violation						x

☞ TOBY-L200-03A / TOBY-L200-03S / TOBY-L201-02S / TOBY-L210-03A / TOBY-L210-03S / TOBY-L280-03A / TOBY-L280-03S / MPCI-L201-02S
The following table lists the supported values for <cause> (number) and <error_description> (string) for +CEER AT command if <type> assumes one of these values:

- EMM cause

This is not valid for TOBY-L201-02S-00, TOBY-L200-03S-00, TOBY-L210-03S-00, TOBY-L210-03A-00, TOBY-L280-03S-00, MPCI-L201-02S-00.

<cause>	<error_description>	TOBY-L2 / MPCI-L2
0	No cause information available	x
2	IMSI unknown in HSS	x
3	Illegal UE	x
5	IMEI not accepted	x
6	Illegal ME	x
7	EPS services not allowed	x
8	EPS services and non-EPS services not allowed	x
9	UE identity cannot be derived by the network	x
10	Implicitly detached	x
11	PLMN not allowed	x
12	Tracking area not allowed	x
13	Roaming not allowed in this tracking area	x
14	EPS services not allowed in this PLMN	x

<cause>	<error_description>	TOBY-L2 / MPCI-L2
15	No suitable cells in tracking area	x
16	MSC temporarily not reachable	x
17	Network failure	x
18	CS domain not available	x
19	ESM failure	x
20	MAC (Message Authentication Code) failure	x
21	Synch failure	x
22	Congestion	x
23	UE security capabilities mismatch	x
24	Security mode rejected, unspecified	x
25	Not authorized for this CSG	x
26	Non-EPS authentication unacceptable	x
35	Requested service option not authorized in this PLMN	x
39	CS service temporarily not available	x
40	No EPS bearer context activated	x
42	Severe network failure	x
95	Semantically incorrect message	x
96	Invalid mandatory information	x
97	Message type non-existent or not implemented	x
98	Message type not compatible with protocol state	x
99	Information element non-existent or not implemented	x
100	Conditional IE error	x
101	Message not compatible with protocol state	x
111	Protocol error, unspecified	x

A.3.1 TOBY-L4 +CEER error result codes

The following table lists the supported values for <cause> (number) and <error_description> (string) for +CEER AT command if <type> assumes one of these values:

- "CC setup error"
- "CC modification error"
- "CC release"
- "SM activation error"
- "SM deactivation

<cause>	<error_description>	TOBY-L4
0	No cause information available	x
1	Unassigned (unallocated) number	x
3	No route to destination	x
6	Channel unacceptable	x
8	Operator determined barring	x
16	Normal call clearing	x
17	User busy	x
18	No user responding	x
19	User alerting, no answer	x
21	Call rejected	x
22	Number changed	x
26	Non selected user clearing	x
27	Destination out of order	x
28	Invalid number format (incomplete number)	x
29	Facility rejected	x
30	Response to STATUS ENQUIRY	x
31	Normal, unspecified	x
34	No circuit/channel available	x
38	Network out of order	x
41	Temporary failure	x

<cause>	<error_description>	TOBY-L4
42	Switching equipment congestion	x
43	Access information discarded	x
44	Requested circuit/channel not available	x
47	Resources unavailable, unspecified	x
49	Quality of service unavailable	x
50	Requested facility not subscribed	x
55	Incoming calls barred within the CUG	x
57	Bearer capability not authorized	x
58	Bearer capability not presently available	x
63	Service or option not available, unspecified	x
65	Bearer service not implemented	x
68	ACM equal to or greater than ACMmax	x
69	Requested facility not implemented	x
70	Only restr. digital information bearer capability	x
79	Service or option not implemented, unspecified	x
81	Invalid transaction identifier value	x
87	User not member of CUG	x
88	Incompatible destination	x
91	Invalid transit network selection	x
95	Semantically incorrect message	x
96	Invalid mandatory information	x
97	Message type non-existent or not implemented	x
98	Message type not compatible with protocol state	x
99	Information element non-existent or not implemented	x
100	Conditional IE error	x
101	Message not compatible with protocol state	x
102	Recovery on timer expiry	x
103	Illegal MS	x
106	Illegal ME	x
107	GPRS service not allowed	x
111	Protocol error, unspecified	x
112	Location area not allowed	x
113	Roaming not allowed in this location area	x
124	MBMS bearer capabilities insufficient for the service	x
125	LLC or SNDCP failure	x
126	Insufficient resources	x
127	Interworking, unspecified	x
127	Missing or unknown APN	x
128	Unknown PDP address or PDP type	x
129	User authentication failed	x
130	Activation rejected by GGSN	x
131	Activation reject,unspecified	x
132	Service not supported	x
133	Requested service option not subscribed	x
134	Service option temporarily out of order	x
135	NSAPI already used	x
136	Regular PDP context deactivation	x
137	QoS not accepted	x
138	Network failure	x
139	Reactivation requested	x
140	Feature not supported	x
141	Semantic error in the TFT operation	x
142	Syntactical error in the TFT operation	x
143	Unknown PDP context	x
144	Semantic errors in packet filter(s)	x

<cause>	<error_description>	TOBY-L4
145	Syntactical errors in packet filter(s)	x
146	PDP context without TFT already activated	x
148	Unspecified GPRS error	x
149	PDP authentication error	x
166	Requested APN not supported in current RAT and PLMN combination	x
212	APN resriction	x
256	Internal, unspecified	x
257	Out of memory	x
258	Invalid parameters	x
259	Data call active	x
260	Speech call active	x
262	Missing ACM information	x
263	Temporary forbidden	x
264	Called party is blacklisted	x
265	Blacklist is full	x
266	No service	x
267	Limited service	x
268	Client conflict	x
269	Dual service call active	x
271	Unknown SIM error	x
274	Active Client is Gone	x
277	SIM status failure	x
278	Rejected by call control	x
279	FDN failed	x
280	BDN failed	x
283	CCBS possible	x
284	Invalid alternate service line	x
285	LND overflow	x
287	MM network failure unspecified	x
288	MM no service	x
289	MM access class barred	x
290	MM RR no resource	x
291	MM ME busy	x
292	MM unspecified	x
296	dual sim radio conflict	x
297	no service due to dual sim radio conflict	x
301	MMI not registered	x
303	Rejected by user	x
304	Rejected due to time out	x
306	Disconnected due to SIM-Toolkit call setup	x
307	Pending SIM-Toolkit call setup	x
310	SIM reset	x
340	MM sapi3 release	x
341	MM lower layer failure	x
342	MM authentification failure	x
343	MM PS reject	x
344	MM service rejected	x
345	MM abort by network	x
346	MM timeout	x
347	MM detach	x
348	MM RR connection release	x
349	MM not registered	x
350	MM reestablishment failure	x
351	Failure due to handover	x
352	Link establishment failure	x

<cause>	<error_description>	TOBY-L4
353	Random access failure	x
354	Radio link aborted	x
355	Lower layer failure in Layer 1	x
356	Immediate Assignment Reject	x
357	Failure due to paging	x
358	Abnormal release unspecified	x
359	Abnormal release channel unacceptable	x
360	Abnormal release timer expired	x
361	Abnormal release no act on radio path	x
362	Preemptive release	x
363	UTRAN configuration unknown	x
364	Handover impossible	x
365	Channel mode unacceptable	x
366	Frequency not implemented	x
367	Originator leaving call group area	x
368	Lower layer failure from network	x
369	Call already cleared	x
370	Semantically incorrect message	x
371	Invalid mandatory info	x
372	Message type non existing	x
373	Message type incompatible in state	x
374	Conditional information element error	x
375	No cell allocation available	x
376	Protocol error unspecified	x
377	Normal event	x
378	Unspecified	x
379	Preemptive release	x
380	Congestion	x
381	RE establishment reject	x
382	Directed sig conn establishment	x
383	User inactivity	x
384	Lower layer failure downlink	x
385	Lower layer failure uplink	x
386	Cell barred due to authentication failure	x
387	signalling connection release	x
388	CS connection release triggered by MM	x
389	RRC connection establishment failure	x
390	RRC connection establishment reject with redirection	x
391	resource conflict	x
392	Layer 2 sequence error	x
393	Layer 2 T200 exp N200 plus 1 times	x
394	Layer 2 unsolicited DM resp MFES	x
395	Layer 2 contention resolution	x
396	Layer 2 normal cause	x
397	RR connection release due to BAND change (2G)	x
400	MM RR connection error while release	x
500	local user disconnect/normal call clearing	x
510	Remote user or NW disconnect/normal call clearing,during any other call state than "CALL PROCEEDING\	x
511	Remote user or NW disconnect/normal call clearing,during the call state "CALL PROCEEDING"	x
512	Request rejected, BCM violation	x
513	No response timeout	x

The following table lists the supported values for <cause> (number) and <error_description> (string) for +CEER AT command if <type> assumes one of these values:

- "SM attach error"
- "SM detach"

<cause>	<error_description>	TOBY-L4
0	No cause information available	x
2	SIM not provisioned	x
3	SIM not allowed	x
4	Call Failed	x
5	Call Failed	x
6	Phone not allowed	x
7	GPRS Service not allowed	x
8	GPRS Service and Non GPRS service not allowed	x
9	MS Identity cannot be Derived by network	x
10	Implicitly Detached	x
11	SOS/Emergency calls only,PLMN not allowed	x
12	SOS/Emergency calls only,LA not allowed	x
13	SOS/Emergency calls only,roaming not allowed in LA	x
15	No Suitable cells in Location Area	x
16	MSC Temporarily Not Reachable	x
20	MAC (Message Authentication Code) FAILURE	x
21	SYNCH FAILURE	x
22	Error Congestion	x
23	SIM not allowed	x
32	Service Option Not supported	x
33	Requested Service option not subscribed	x
34	Service temporarily out of order	x
38	Call cannot be Identifed	x
40	NO PDP Context Active	x
48	Retry on New Cell beginning	x
63	Retry on New Cell End	x
95	Semantically Incorrect message	x
96	Invalid mandatory information	x
97	Message type non existent or Not implemented	x
98	Message type not compatible with protocols state	x
99	Information element non existent or Not implemented	x
100	Conditional IE Error	x
101	Message Not Compatible with Protocol state	x
111	Protocol error unSpecified	x

The following table lists the supported values for <cause> (number) and <error_description> (string) for +CEER AT command if <type> assumes one of these values:

- EMM cause

<cause>	<error_description>	TOBY-L4
0	No cause information available	x
2	IMSI unknown in HSS	x
3	Illegal UE	x
5	IMEI not accepted	x
6	Illegal ME	x
7	EPS services not allowed	x
8	EPS services and non-EPS services not allowed	x
9	UE identity cannot be derived by the network	x
10	Implicitly detached	x
11	PLMN not allowed	x
12	Tracking area not allowed	x
13	Roaming not allowed in this tracking area	x
14	EPS services not allowed in this PLMN	x

<cause>	<error_description>	TOBY-L4
15	No suitable cells in tracking area	x
16	MSC temporarily not reachable	x
17	Network failure	x
18	CS domain not available	x
19	ESM failure	x
20	MAC (Message Authentication Code) failure	x
21	Synch failure	x
22	Congestion	x
23	UE security capabilities mismatch	x
24	Security mode rejected, unspecified	x
25	Not authorized for this CSG	x
26	Non-EPS authentication unacceptable	x
35	Requested service option not authorized in this PLMN	x
39	CS service temporarily not available	x
40	No EPS bearer context activated	x
42	Severe network failure	x
95	Semantically incorrect message	x
96	Invalid mandatory information	x
97	Message type non-existent or not implemented	x
98	Message type not compatible with protocol state	x
99	Information element non-existent or not implemented	x
100	Conditional IE error	x
101	Message not compatible with protocol state	x
111	Protocol error, unspecified	x

The following table lists the supported values for <cause> (number) and <error_description> (string) for +CEER AT command if <type> assumes one of these values:

- ESM attach error
- ESM detach

<cause>	<error_description>	TOBY-L4
0	No cause information available	x
8	Operator Determined Barring	x
26	Insufficient resources	x
27	Missing or unknown APN	x
28	Unknown PDN type	x
29	User authentication failed	x
30	Request rejected by Serving GW or PDN GW	x
31	Request rejected, unspecified	x
32	Service option not supported	x
33	Requested service option not subscribed	x
34	Service option temporarily out of order	x
35	PTI already in use	x
36	Regular deactivation	x
37	EPS QoS not accepted	x
38	Network failure	x
39	Reactivation requested	x
41	Semantic error in the TFT operation	x
42	Syntactical error in the TFT operation	x
43	Invalid EPS bearer identity	x
44	Semantic errors in packet filter(s)	x
45	Syntactical error in packet filter(s)	x
47	PTI mismatch	x
49	Last PDN disconnection not allowed	x
50	PDN type IPv4 only allowed	x
51	PDN type IPv6 only allowed	x

<cause>	<error_description>	TOBY-L4
52	single address bearers only allowed"	x
53	ESM information not received	x
54	PDN connection does not exist	x
55	Multiple PDN connections for a given APN not allowed	x
56	Collision with network initiated request	x
59	Unsupported QCI value	x
60	Bearer handling not supported	x
65	Maximum number of EPS bearers reached	x
66	Requested APN not supported in current RAT and PLMN combination	x
55	Multiple PDN connections for a given APN not allowed	x
56	Collision with network initiated request	x
81	Invalid PTI value	x
95	Semantically incorrect message	x
96	Invalid mandatory information	x
97	Message type non-existent or not implemented	x
98	Message type not compatible with protocol state	x
99	Information element non-existent or not implemented	x
100	Conditional IE error	x
101	Message not compatible with protocol state	x
111	Protocol error, unspecified	x
112	APN restriction value incompatible with active EPS bearer context	x

A.4 Firmware install final result codes

The +UFWINSTALL command issues a final result code providing the result of the FW install procedure. In case the FW install procedure fails, the error result code provides some indication about the error cause (syntax error or issue during the installation procedure).

A.4.1 TOBY-L2 / MPCI-L2 error result codes

This table lists the allowed error result codes applicable to TOBY-L2 / MPCI-L2 series modules:

Error result code	Description
md5 not matching, update failed ERROR3	The md5 calculated from the stored file is not matching with the one provided in the command. The module exits Firmware Install Mode and starts the actual FW
short md5, update failed ERROR1	md5 provided in the command has been detected shorter. The install is not started. The module exits Firmware Install Mode and starts the actual FW
long md5, update failed ERROR1	md5 provided in the command has been detected longer. The install is not started. The module exits Firmware Install Mode and starts the actual FW
missing md5, update failed ERROR1	md5 in missing from the issued AT command. The install is not started. The module exits Firmware Install Mode and starts the actual FW
md5 with no hex digits, update failed ERROR1	md5 provided in the command has been detected with at least one not hex digits. Install is not started. The module exits Firmware Install Mode and starts the actual FW
update file not found ERROR1	Update file is not found in the specific folder. The install is not started. The module exits Firmware Install Mode and starts the actual FW

A.4.2 TOBY-L4 / LARA-R2 / TOBY-R2 / SARA-U2 / LISA-U2 final result codes

Syntax error resulting from the +UFWINSTALL command:

Numeric code	error Verbose description	Description
4	+CME ERROR: not supported	One of the following cases: • Wrong serial port number • Wrong baud rate

Numeric error code	Verbose description	Description
		• Number of parameters not allowed • File name too long
1624	+CME ERROR: FFS file not found	The delta file is not stored in the module FS or the file name is wrong

A.4.2.1 TOBY-L4 / LARA-R2 / TOBY-R2 / SARA-U2 final result codes

Here below are listed the allowed final result codes that can be issued at the finalization of the install procedure by means of the +UFWINSTALL command:

- 128: FW update successfully performed
- 165: wrong delta file in use
- In case a different error result code is provided please contact u-blox Technical Support offices for support

A.4.2.2 LISA-U2 final result codes

Here below are listed the allowed final result code that can be issued at the finalization of the install procedure by means of the +UFWINSTALL command:

Numeric error code	Description
128	General success Code
129	General failure Code
130	Error in a run parameter
131	Expected length error
132	Structural error
133	Signature error
134	Given RAM is not enough
135	Does not behave as RAM
136	Memory allocation failure
137	Flash writing failure
138	Flash erasing failure
139	Flash reading failure
140	One API function is not declared
141	Backup buffer(s) not sector aligned
142	Start address is not sector aligned
143	File does not exist
144	RO or no access rights
145	File does not exist
146	No access rights
147	Cannot resize file
148	Cannot read specified size
149	Cannot close file handle
150	Failed creating symbolic link
151	Failed creating directory
152	Bad operation number for update
153	Unsupported compression
154	Can not apply reverse update for delta not generated as reverse delta
155	Number of backup buffers given to UPI does not match number in delta file
156	Sector size mismatch between UPI and delta
157	UPI was not compiled to support reverse update
158	UPI was not compiled to support IFS on compressed images
159	UPI was not compiled to support IFS
160	Source mismatch in scout only operation
161	There is not enough RAM to run with operation=2 (Dry update)
162	Delta file too long - corrupted
163	Mismatch between deletes sig and delta deletes buffers signature
164	Number of fragments in section is not 1

Numeric error code	Description
165	Over all number of backup sects too big
166	Delta file is corrupt: signature mismatch between delta header signature and calculated signature
167	File signature does not match signature
168	Signature for the target buffer does not match the one stored in the delta file
169	Too many dirty buffers
170	UPI version mismatch between UPI and delta
171	Scout version mismatch between UPI and delta
172	Partition name is different in delta and in UPI data
173	There is not enough flash to update or install the files
174	There is not enough backup space on device
175	UPI does not support RW file system update
176	UPI does not support image update
177	Deployment Package header is invalid
178	Deployment Package signature is invalid
179	Deployment Package version is not supported
180	Requested ordinal does not exist in Deployment Package
181	Requested component was not found in Deployment Package

A.5 Firmware install with signature verification final result codes

The +UFWSINSTALL command issues a final result code providing the result of the FW installation procedure (with signature verification). In case the FW installation procedure fails, the error result code provides some indication about the error cause (syntax error or issue during the FW installation procedure).

A.5.1 TOBY-L2 / MPCI-L2 error result codes

This table lists the allowed error result codes applicable to TOBY-L2 / MPCI-L2 series modules:

Error result code	Description
invalid parameter <usecmng_iname>, update failed ERROR1	The parameter <usecmng_iname> parameter is invalid. The FW installation procedure fails and the module returns to AT command mode.
invalid parameter <base64_signature>, update failed ERROR2	The parameter <base64_signature> parameter is invalid. The FW installation procedure fails and the module returns to AT command mode.
update file not found ERROR3	Update file is not found in the specific folder. The FW installation procedure fails and the module returns to AT command mode.
signature verification error, update failed ERROR4	The FW update file signature verification failed. The FW installation procedure fails and the module returns to AT command mode.

A.5.2 TOBY-L2 / MPCI-L2 final result codes

Syntax error resulting from the +UFWSINSTALL command:

Numeric error code	Verbose description	Description
4	+CME ERROR: not supported	One of the following cases: • Parameter <usecmng_iname> missing or too long • Parameter <base64_signature> missing or too long • Number of parameters not allowed

A.6 FOAT error result codes

See +UFWUPD command description.

A.6.1 TOBY-L2 / MPCI-L2 error result codes

This table lists the allowed error result codes applicable to TOBY-L2 / MPCI-L2 series:

Error result code	Description
too many errors; giving up ERROR1	General error. The operation has been interrupted before starting to write in flash, the actual FW is unchanged; the module exits Firmware Update Mode and starts the actual FW
bad block ones compl	Block number error
unexpected block no, #num, expecting #num1	Unexpected block number
crc error, expected num, got num1	crc error
checksum error, expected num, got num1	checksum error
md5 not matching, update failed ERROR3	Download has been done correctly but the md5 calculated from the downloaded file is not matching with the one provided in the command.The module exits Firmware Update Mode and starts the actual FW
short md5, update failed ERROR1	md5 provided in the command has been detected shorter. The download is not started. The module exits Firmware Update Mode and starts the actual FW
long md5, update failed ERROR1	md5 provided in the command has been detected longer. The download is not started. The module exits Firmware Update Mode and starts the actual FW
md5 with no hex digits, update failed ERROR1	md5 provided in the command has been detected with at least one not hex digits.Download is not started. The module exits Firmware Update Mode and starts the actual FW
missing md5, update failed ERROR1	md5 in missing from provided AT command. The update is not started. The module exits Firmware Update Mode and starts the actual FW

A.6.2 LARA-R2 / TOBY-R2 / SARA-U2 / LISA-U2 / LISA-U1 / SARA-G4 / SARA-G3 / LEON-G1 error result codes

Error result code	Description
ERROR1	The operation has been interrupted and the actual FW is unchanged; the module drops out from Firmware Update Mode
ERROR2	The operation has been interrupted during FW updating; the actual firmware is corrupted and the module remains in Firmware Update Mode
ERROR3	The signature check fails
ERROR4	The module has received unexpected EOT because not all excepted bytes have been received
ERROR5	The boot does not support the selected baudrate
ERROR6	Invalid AT command sent during boot
FLS header decoding failed	An error occurs during decoding of file header
Buffer Data Overrun	The buffers are not filled at least with a 1029 packet: data comes too slowly
Timeout	The command must be re-sent: no data is coming

A.7 Dynamic DNS unsolicited indication codes

The following table lists the available values of <error_code> parameter of the last Dynamic DNS update provided through +UUDYNDNS URC (for more details see the AT+UDYNDNS command description).

Numeric error code	Description
0	Success
1	Data connection lost while performing update
2	Cannot update dynamic DNS because a private IP address has been assigned to the module
3	Connection to dynamic DNS server failed
4	Error occurred sending data to dynamic DNS server
5	Error occurred reading response from dynamic DNS server
6	Timeout while waiting response from dynamic DNS server

Numeric error code	Description
7	Dynamic DNS server closed connection unexpectedly
8	Unexpected response from dynamic DNS server
9	Dynamic DNS response seems to be incomplete
10	Update has been delayed in order to respect DNS update protocol timing specification
40	Dynamic DNS protocol specific: good (TZO code 200)
41	Dynamic DNS protocol specific: nochg (TZO code 304)
42	Dynamic DNS protocol specific: notfqdn
43	Dynamic DNS protocol specific: nohost
44	Dynamic DNS protocol specific: numhost
45	Dynamic DNS protocol specific: badauth (TZO code 401)
46	Dynamic DNS protocol specific: badagent (TZO code 405)
47	Dynamic DNS protocol specific: !donator
48	Dynamic DNS protocol specific: abuse
49	Dynamic DNS protocol specific: dnserr
50	Dynamic DNS protocol specific: 911
51	Dynamic DNS protocol specific: badsys
52	Dynamic DNS protocol specific: !yours
53	Dynamic DNS protocol specific: TZO code 403
54	Dynamic DNS protocol specific: TZO code 407
55	Dynamic DNS protocol specific: TZO code 414
56	Dynamic DNS protocol specific: TZO code 415
57	Dynamic DNS protocol specific: TZO code 480
100-108	Internal errors

☞ The meaning of dynamic DNS protocol specific codes depends on the provider used; see the provider documentation.

☞ Errors 45, 46, 53, 54 and 56 trigger a client self deactivation when the provider is TZO.com.

☞ Errors 42, 43, 44, 46, 48, 51 and 52 trigger a client self deactivation when the selected provider is DynDNS.org or DynDNS.it or No-IP.org or DynamicDNS.org.

A.8 Internal TCP/UDP/IP stack class error codes

The following table lists all allowed error classes that can be provided by the internal TCP/UDP/IP stack through +USOER and +USOCTL (with <param_id>=1) AT commands.

Numeric error code	Description	Resulting from the following commands
0	No error	+USOCR, +USOSO, +USOGO, +USOCO, +USOWR, +USOST, +USORD, +USORF, +USOLI
1	EPERM - Operation not permitted (internal error)	+USOCR, +USOSO, +USOGO, +USOCO, +USOWR, +USOST, +USORD, +USORF, +USOLI
2	ENOENT - No such resource (internal error)	+USOCR, +USOSO, +USOGO, +USOCO, +USOWR, +USOST, +USORD, +USORF, +USOLI
4	EINTR - Interrupted system call (internal error)	+USOCR, +USOSO, +USOGO, +USOCO, +USOWR, +USOST, +USORD, +USORF, +USOLI
5	EIO - I/O error (internal error)	+USOCR, +USOSO, +USOGO, +USOCO, +USOWR, +USOST, +USORD, +USORF, +USOLI
9	EBADF - Bad file descriptor (internal error)	+USOCR, +USOSO, +USOGO, +USOCO, +USOWR, +USOST, +USORD, +USORF, +USOLI

Numeric error code	Description	Resulting from the following commands
10	ECHILD - No child processes (internal error)	+USOCR, +USOSO, +USOGO, +USOCO, +USOWR, +USOST, +USORD, +USORF, +USOLI
11	EWOULDBLOCK / EAGAIN - Current operation would block, try again	+USOWR
12	ENOMEM - Out of memory (internal error)	+USOCR, +USOSO, +USOGO, +USOCO, +USOWR, +USOST, +USORD, +USORF, +USOLI
14	EFAULT - Bad address (internal error)	+USOCR, +USOSO, +USOGO, +USOCO, +USOWR, +USOST, +USORD, +USORF, +USOLI
22	EINVAL - Invalid argument	+USOCR, +USOSO, +USOGO, +USOCO, +USOWR, +USOST, +USORD, +USORF, +USOLI
32	EPIPE - Broken pipe (internal error)	+USOCR, +USOSO, +USOGO, +USOCO, +USOWR, +USOST, +USORD, +USORF, +USOLI
38	ENOSYS - Function not implemented	+USOSO, +USOGO
64	ENONET - Machine is not on the internet	+USOCR, +USOWR, +USOST, +USORD, +USORF, +USOLI
65	EEOF - End of file	+USOWR, +USOST, +USORD, +USORF
71	EPROTO - Protocol error	+USOWR, +USOST, +USORD, +USORF
77	EBADFD - File descriptor in bad state (internal error)	+USOCR, +USOSO, +USOGO, +USOCO, +USOWR, +USOST, +USORD, +USORF, +USOLI
78	EREMCHG - Remote address changed	+USOWR, +USOST, +USORD, +USORF, +USOCL
89	EDESTADDRREQ - Destination address required	+USOCO, +USOST
91	EPROTOTYPE - Wrong protocol type for socket	+USOCR
92	ENOPROTOOPT - Protocol not available	+USOCR
93	EPROTONOSUPPORT - Protocol not supported	+USOCR
94	ESOCKTNNOSUPPORT - Socket type not supported	+USOCR
95	EOPNOTSUPP - Operation not supported on transport endpoint	+USOWR, +USOST, +USORD, +USORF, +USOCL
96	EPFNOSUPPORT - Protocol family not supported	+USOCR
97	EAFNOSUPPORT - Address family not supported by protocol	+USOCR
98	EADDRINUSE - Address already in use	+USOLI
99	EADDRNOTAVAIL - Cannot assign requested address	+USOCR, +USOLI, +USOCO
100	ENETDOWN - Network is down	+USOCR, +USOLI, +USOCO, +USOWR, +USOST, +USORD, +USORF, +USOCL
101	ENETUNREACH - Network is unreachable	+USOCO, +USOST, +USORF
102	ENETRESET - Network dropped connection because of reset	+USOCR, +USOLI, +USOCO, +USOWR, +USOST, +USORD, +USORF, +USOCL
103	ECONNABORTED - Software caused connection abort	+USOCR, +USOSO, +USOGO, +USOCO, +USOWR, +USOST, +USORD, +USORF, +USOLI
104	ECONNRESET - Connection reset by peer	+USOCR, +USOSO, +USOGO, +USOCO, +USOWR, +USOST, +USORD, +USORF, +USOLI
105	ENOBUFS - No buffer space available	+USOCR, +USOSO, +USOGO, +USOCO, +USOWR, +USOST, +USORD, +USORF, +USOLI
106	EISCONN - Transport endpoint is already connected	+USOCO
107	ENOTCONN - Transport endpoint is not connected	+USOCR, +USOSO, +USOGO, +USOCO, +USOWR, +USOST, +USORD, +USORF, +USOLI
108	ESHUTDOWN - Cannot send after transport endpoint shutdown	+USOCR, +USOSO, +USOGO, +USOCO, +USOWR, +USOST, +USORD, +USORF, +USOLI

Numeric error code	Description	Resulting from the following commands
110	ETIMEDOUT - Connection timed out	+USOCO, +USOST, +USORD, +USORF
111	ECONNREFUSED - Connection refused	+USOCO
112	EHOSTDOWN - Host is down	+USOCL, +USOCO, +USOWR, +USOST, +USORD, +USORF
113	EHOSTUNREACH - No route to host	+USOCO, +USOWR, +USOST, +USORD, +USORF
115	EINPROGRESS - Operation now in progress	+USOCR, +USOSO, +USOGO, +USOCO, +USOWR, +USOST, +USORD, +USORF, +USOLI
160	ENSRNODATA - DNS server returned answer with no data	+UDNSRN
161	ENSRFORMERR - DNS server claims query was misformatted	+UDNSRN
162	ENSRSERVFAIL - DNS server returned general failure	+UDNSRN
163	ENSRNOTFOUND - Domain name not found	+UDNSRN
164	ENSRNOTIMP - DNS server does not implement requested operation	+UDNSRN
165	ENSRREFUSED - DNS server refused query	+UDNSRN
166	ENSRBADQUERY - Misformatted DNS query	+UDNSRN
167	ENSRBADNAME - Misformatted domain name	+UDNSRN
168	ENSRBADFAMILY - Unsupported address family	+UDNSRN
169	ENSRBADRESP - Misformatted DNS reply	+UDNSRN
170	ENSRCONNREFUSED - Could not contact DNS servers	+UDNSRN
171	ENSRTIMEOUT - Timeout while contacting DNS servers	+UDNSRN
172	ENSROF - End of file	+UDNSRN
173	ENSRFILE - Error reading file	+UDNSRN
174	ENSRNOMEM - Out of memory	+UDNSRN
175	ENSRDESTRUCTION - Application terminated lookup	+UDNSRN
176	ENSRQUERYDOMAINTOOLONG - Domain name is too long	+UDNSRN
177	ENSRCNAMELOOP - Domain name is too long	+UDNSRN

A.9 Internet suite error classes

The following table lists all allowed error classes that can be provided by the <error_class> parameter for each AT error command (+UFTPER, +UHTTPER, +USMTPER) for FTP, HTTP and SMTP.

<error_class>	Description	<error_codes>	Resulting from the following commands
0	OK, no error occurred		All
1	FTP Protocol error class	See the Appendix A.9.1	+UFTPC, +UFTP, +UFTPER
2	SMTP Protocol error class	See the Appendix A.9.3	+USMTP, +USMTPM, +USMTPC, +USMTPER
3	HTTP Protocol error class	See the Appendix A.9.2	+UHTTP, +UHTTPC, +UHTTPER
4	Flash File System error class	See the Appendix A.9.4	+UFTPC, +UFTPER, +UHTTPC, +UHTTPER
5	DNS error class		+UFTPC, +UFTPER, +UHTTPC, +UHTTPER, +USMTPC, +USMTPER
6	Socket error class	BSD error codes standard	All
7	Dynamic Memory error	0	All
8	Wrong FTP API usage (e.g. missing/null parameters)	See the Appendix A.9.1	+UFTPC, +UFTP, +UFTPER
9	Wrong SMTP API usage (e.g. missing/null parameters)	See the Appendix A.9.3	+USMTP, +USMTPM, +USMTPC, +USMTPER
10	Wrong HTTP API usage (e.g. missing/null parameters)	See the Appendix A.9.2	+UHTTP, +UHTTPC, +UHTTPER

<error_class>	Description	<error_codes>	Resulting from the following commands
11	Syntax error in high layer Protocol (wrong/missing/ corrupted data)		+UFTPC, +UFTPER, +UHTTPC, +UHTTPER, +USMTPC, +USMTPER
12	Unspecified error	0	All
13	UMQTT error class	See the #unique_2701	+UMQTT, +UMQTTC, +UMQTTWTOPIC, +UMQTTWMSG
15	CoAP error class	See the #unique_2702	+UCOAP, +UCOAPC, +UCOAPER

A.9.1 FTP class error codes

The following table lists the available values of <error_code> parameter of the last FTP operation provided through +UFTPER AT command if <error_class>=1 or 8 (for more details see the AT+UFTP, AT+UFTPC commands description).

Numeric error code	Description
0	No error
1	User missing
2	Password missing
3	Account missing
4	Server missing
5	Directory name missing
6	File name missing
7	Null parameter
8	Unknown FTP command
9	Unknown file action
10	Wrong FTP state
11	Wrong parameter
12	PSD or CSD connection not established
13	No memory available for allocation
14	Reserved internal code
15	Length of given web server (address or hostname) too long or too short
16	Hostname of given web server invalid
17	Address of given web server is invalid
18	Username too long or too short
19	Password too long or too short
20	Account too long or too short
21	Operation not allowed because FTP client is busy
22	Not possible to connect to FTP server
23	Error occurred in FTP request
24	Reserved internal code
25	FFS filename pointer is null or its length is 0
26-30	Reserved internal code
31	Timeout elapsed while performing requested operation
32	Internal processing error
33	Not logged in
34	Login incorrect
35	File unavailable (not found or no access)
36	File not ready
37	Filename not allowed
38	Folder not found
39	Folder no access
40	Operation aborted by user
41	Permission denied
42	Cannot open FTP data channel

Numeric error code	Description
43	Socket invalid parameter
44	Invalid socket
45	No socket available
46	Cannot create socket
47	Cannot bind socket to network interface
48	Cannot resolve hostname
49	Cannot connect socket
50	Cannot get socket name
51	Cannot bind socket to port
52	Socket cannot listen
53	Socket cannot accept
54	Socket would block
55	Socket cannot write
56	Socket cannot read
57	Reserved internal code
58	No socket data to send
59	Socket cannot get available data
60	No socket data to read
61	Socket no response code found
62	Socket not connected
63	Cannot set secure socket
64	Socket cannot decode password
65	Socket cannot get size
66	FFS Invalid parameter
67	FFS invalid handle
68	FFS cannot open file
69	FFS cannot seek file
70	FFS cannot get file size
71	FFS cannot read
72	FFS bad offset
73	FFS cannot write
74	Direct link internal error
75	Failed to open extended passive mode
76	Failed to parse extended passive mode server reply
77	Internal error
78	Client IP protocol not supported - try passive mode
79	Data transfer error. The transferred (received/sent) data is not complete
226	Closing data connection; requested file action successful (for example, file transfer or file abort)
250	Requested file action okay, completed
350	Requested file action pending further information
421	Service not available, closing control connection. User limit reached Not authorized to make the connection Maximum connections reached Maximum connections exceeded
425	Cannot open data connection
426	Connection closed; transfer aborted. The command opens a data connection to perform an action, but that action is cancelled, and the data connection is closed
450	Requested file action not taken. File unavailable (e.g. file busy)
451	Requested action aborted: local error in processing
452	Requested action not taken. Insufficient storage space in system
500	Syntax error, command unrecognized, command line too long
501	Syntax error in parameters or arguments

Numeric error code	Description
502	Command not implemented
503	Bad sequence of commands
504	Command not implemented for that parameter
530	User not logged in
532	Need account for storing files
550	Requested action not taken. File unavailable, not found, not accessible
552	Requested file action aborted. Exceeded storage allocation
553	Requested action not taken. Filename not allowed

For all the errors not listed in the table see the RFC 959 [75] and RFC 2428 [76].

A.9.2 HTTP class error codes

The following table lists the available values of <error_code> parameter of the last HTTP operation provided through +UHTTPER AT command if <error_class>=3 or 10 (for more details see the AT+UHTTP and AT +UHTTPC commands description).

Numeric error code	Description
0	No error
1	Invalid profile ID
2	Invalid input
3	Server hostname too long
4	Invalid server hostname
5	Invalid server IP address
6	Invalid authorization method
7	Server missing
8	Username length exceeded
9	Password length exceeded
10	Internal error
11	Server connection error
12	Error occurred in HTTP request
13	Internal error
14	Internal error
15	Invalid POST data size
16	Empty FFS file name
17	Invalid FFS file length
18	Invalid content-type specified
19	Internal error
20	Internal error
21	Internal error
22	PSD or CSD connection not established
23	Server or proxy hostname lookup failed
24	User authentication failed on server
25	User authentication failed on proxy
26	Connection timed out
27	Request prepare timeout expired
28	Response receive timeout expired
29	Request send timeout expired
30	HTTP operation in progress
31	Invalid HTTP parameter TCP port not in range (1-65535)
32	Invalid HTTP parameter secure
33	Invalid HTTP parameter authentication username
34	Invalid HTTP parameter authentication password
35	Invalid HTTP parameter output filename
36	Invalid HTTP parameter output filename length
37	Invalid HTTP parameter server path

Numeric error code	Description
38	Invalid HTTP parameter server path length
39	Invalid HTTP parameter content filename length
40	Invalid custom content type string
41	Output file open error
42	Output file close error
43	Output file write error
44	Connection lost
45	Operation not allowed in current state
46 - 72	Internal error
73	Secure socket connect error

A.9.3 SMTP class error codes

The following table lists the available values of <error_code> parameter of the last SMTP operation provided through +USMTPER AT command if <error_class>=2 or 9 (for more details see the AT+USMTP, AT+USMTPM, AT+USMTPC commands description).

Numeric error code	Description
0	No error
1	Server missing
2	Sender address missing
3	Receiver address missing
4	Maximum number of receivers exceeded
5	Maximum address length exceeded
6	Internal error
7	Maximum subject length exceeded
8	Maximum number of attachments exceeded
9	Wrong SMTP state
10	Wrong parameter
11	Internal error
12	PSD or CSD connection not established

A.9.4 File system class error codes

☞ TOBY-L2 / MPCI-L2 / LARA-R2 / TOBY-R2 / SARA-U2 / LISA-U2 / LISA-U1 / SARA-G3 / LEON-G1
The following table lists the available values of <error_code> parameter of the last FTP, HTTP or SMTP operation provided through +UFTPER, +UHTTPER and +USMTPER AT commands if the <error_class> is 4 "Flash File System error class".

Numeric error code	Description
2	Operation performed with success
3	Initialization in progress
4	File already opened
5	File not opened
6	File not found
7	File already created
8	Illegal id
9	Illegal file handle
10	Illegal type
11	Illegal mode
12	File range error
13	The operation is not possible
14	Write error
15	User id error
16	Internal fatal error
17	Memory resource error
18	Maximum number of files exceeded
19	Memory not available

Numeric error code	Description
20	Invalid filename
21	Streaming not enabled
22	Operation not allowed on static file
23	Memory table inconsistency
24	Not a factory default file
25	Requested memory temporary not available
26	Operation not allowed for a directory
27	Space in the directory space not available
28	Too many streaming files opened
29	Requested dynamic memory temporary not available
30	The user provided a NULL parameter instead of a suitable buffer

A.10 IP change notification error result codes

The following table lists the available values of <error_code> parameter of the last IP Change Notification provided through +UUIPCHGN URC (for more details see the AT+UIPCHGN command description).

Numeric error code	Description
0	The IP CN feature was enabled from a previous working session and is active
10	Internal PSD data connection is not active
11	Invalid IP address assigned to module (e.g. empty string)
12	IMEI could not be retrieved
13	IMSI could not be retrieved
14	Error preparing HTTP GET request for IP CN
15	Error creating socket for HTTP connection
16	Error connecting to remote HTTP server
17	Error sending HTTP GET request to HTTP server
18	Error receiving or parsing HTTP GET response from HTTP server

A.11 Ping error result codes

The following table lists the available values of <error_code> parameter of the last ping operation provided through +UUPINGER URC (for more details see the AT+UPING command description).

Numeric error code	Description
0	Success (no error)
1 - 6	Internal error (ping level)
7	Empty remote host
8	Cannot resolve host
9	Unsupported IP version (RFU)
10	Invalid IPv4 address
11	Invalid IPv6 address (RFU)
12	Remote host too long
13	Invalid payload size
14	Invalid TTL value
15	Invalid timeout value
16	Invalid retries number
17	PSD or CSD connection not established
100 - 105	Internal error (ICMP level)
106	Error creating socket for ICMP
107	Error settings socket options for ICMP
108	Cannot end ICMP packet
109	Read for ICMP packet failed
110	Received unexpected ICMP packet
111-115	Internal error (socket level)

A.12 Mobile termination error result codes

The command +CMOLRE (see subclause 9.1a of 3GPP TS 27.007 [2]) configures the <err> parameter in numeric or verbose format.

Numeric error code	Description
0	Method not supported
1	Additional assistance data required
2	Not enough satellites
3	UE busy[11]
4	Network error
5	Failed to open internet connection, too many connections[12]
6	Failed to open internet connection, too many users[12]
7	Failure due to handover
8	Internet connection failure[12]
9	Memory error
10	Timeout
255	Unknown error

[11] There is already one ongoing positioning session and the UE does not support multiple simultaneous sessions

[12] Only applicable to SUPL-based transactions. Currently SUPL is not supported

B Appendix: AT Commands List

	AT command	Audio interface and tuning																						
		+UAPLAY	+UAPT	+UAREC	+UDBF	+UDCONF=30	+UDCONF=31	+UDCONF=33	+UDTMFD	+UEXTDCONF	+UHFP	+UI2S	+UMAAT	+UMAFE	+UMCLK	+UMGC	+UMSEL	+UMSM	+UPAR	+UPLAYFILE	+URECFILE	+URNG	+USAFE	+USAR
LEON	G100-06S				•						•	•				•		•	•	•		•		•
	G100-07S / G100-08S				•	•			•		•	•				•		•	•	•		•		•
SARA	G300-00S / G310-00S																							
	G340-00S / G350-00S				•	•			•		•	•				•		•	•	•		•		•
	G350-00X				•	•			•		•	•				•		•	•	•		•		•
	G340-01S / G350-01S G350-01B				•	•			•		•	•				•		•	•	•		•		•
	G340-02S / G350-02S G350-02A				•	•	•		•		•	•				•		•	•	•		•		•
	G340-02X / G350-02X				•	•	•		•		•	•				•		•	•	•		•		•
	G450-00C																							
	U201-03A / U201-03B U201-03X				•	•	•		•	•	•	•			•	•		•	•	•		•		•
	U201-63B				•	•	•		•	•	•	•			•	•		•	•	•		•		•
	U201-04A / U201-04B U201-04X	•		•	•	•	•		•	•	•	•			•	•		•	•	•	•	•		•
	U260-00S / U280-00S				•	•	•		•	•	•	•			•	•		•	•	•		•		•
	U270-00S / U270-00X				•	•	•		•	•	•	•			•	•		•	•	•		•		•
	U260-03S / U280-03S				•	•	•		•	•	•	•			•	•		•	•	•		•		•
	U270-03A / U270-03S				•	•	•		•	•	•	•			•	•		•	•	•		•		•
	U270-53S				•	•	•		•	•	•	•			•	•		•	•	•		•		•
	U270-73S				•	•	•		•	•	•	•			•	•		•	•	•		•		•
	U270-04B	•		•	•	•	•		•	•	•	•			•	•		•	•	•	•	•		•
LISA	U100 / U110																							
	U120 / U130				•						•	•				•		•	•	•		•		•
	U200-00S														•									
	U200-01S / U260-01S U270-01S				•	•	•			•	•	•			•	•		•	•	•		•		•
	U230-01S				•	•	•			•	•	•			•	•		•	•	•		•		•
	U200-02S / U260-02S U270-02S				•	•	•		•	•	•	•			•	•		•	•	•		•		•
	U200-52S				•	•	•		•	•	•	•			•	•		•	•	•		•		•
	U200-62S				•	•	•		•	•	•	•			•	•		•	•	•		•		•
	U270-62S / U270-63S U270-68S				•	•	•		•	•	•	•			•	•		•	•	•		•		•
	U200-03S / U201-03S U201-03A				•	•	•		•	•	•	•			•	•		•	•	•		•		•
	U200-83S / U201-83S				•	•	•		•	•	•	•			•	•		•	•	•		•		•
TOBY	L4006-01A					•						•	•	•		•	•						•	
	L4006-51A					•						•	•	•		•	•						•	
	L4106-01A					•						•	•	•		•	•						•	
	L4106-51A					•						•	•	•		•	•						•	
	L4206-01A					•						•	•	•		•	•						•	
	L4206-51A					•						•	•	•		•	•						•	
	L4906-01A											•	•	•		•	•						•	
	L4906-50A											•	•	•		•	•						•	
	L4906-51A											•	•	•		•	•						•	
	L200-00S / L210-00S																							
	L200-02S / L210-02S		•			•	•		•	•		•			•			•	•	•				•
	L200-03S / L210-03S L280-03S		•			•	•	•	•	•		•			•			•	•	•				•

	AT command	Audio interface and tuning																						
		+UAPLAY	+UAPT	+UAREC	+UDBF	+UDCONF=30	+UDCONF=31	+UDCONF=33	+UDTMFD	+UEXTDCONF	+UHFP	+UI2S	+UMAAT	+UMAFE	+UMCLK	+UMGC	+UMSEL	+UMSM	+UPAR	+UPLAYFILE	+URECFILE	+URNG	+USAFE	+USAR
	L201-01S																							
	L201-02S																							
	L210-60S																							
	L210-62S		•			•	•		•	•		•			•			•	•	•				•
	L200-03A / L210-03A L280-03A		•			•	•	•	•	•		•			•			•	•	•				•
	L280-02S		•			•	•		•	•		•			•			•	•	•				•
	L220-02S		•			•	•		•	•		•			•			•	•	•				•
	L220-62S																							
	R200-02B / R202-02B				•	•	•		•	•	•	•			•	•		•	•	•		•		•
LARA	R202-02B				•	•	•		•	•	•	•			•	•		•	•	•		•		•
	R203-02B				•	•	•		•	•	•	•			•	•		•	•	•		•		•
	R204-02B														•									
	R211-02B				•	•	•		•	•	•	•			•	•		•	•	•		•		•
	R220-62B														•									
	R280-02B				•	•	•		•	•	•	•			•	•		•	•	•		•		•
MPCI	L200-00S / L210-00S																							
	L201-01S																							
	L201-02S																							
	L210-60S																							
	L200-02S / L210-02S								•															
	L200-03S / L210-03S L280-03S							•	•															
	L220-02S								•															
	L220-62S																							
	L280-02S								•															

	AT command	Audio interface and tuning									
		+USGC	+USPEECHINFO	+USPM	+USTN	+USTOPFILE	+UTGN	+UTI	+UUBF	+UVGC	
LEON	G100-06S	•		•	•	•	•		•		
	G100-07S / G100-08S	•		•	•	•	•		•		
SARA	G300-00S / G310-00S										
	G340-00S / G350-00S	•		•	•	•	•		•		
	G350-00X	•		•	•	•	•		•		
	G340-01S / G350-01S G350-01B	•		•	•	•	•		•		
	G340-02S / G350-02S G350-02A	•		•	•	•	•		•		
	G340-02X / G350-02X	•		•	•	•	•		•		
	G450-00C										
	U201-03A / U201-03B U201-03X	•		•	•	•	•		•		
	U201-63B	•		•	•	•	•		•		
	U201-04A / U201-04B U201-04X	•		•	•	•	•	•	•		
	U260-00S / U280-00S	•		•	•	•	•		•		
	U270-00S / U270-00X	•		•	•	•	•		•		
	U260-03S / U280-03S	•		•	•	•	•		•		
	U270-03A / U270-03S	•		•	•	•	•		•		
	U270-53S	•		•	•	•	•		•		
	U270-73S	•		•	•	•	•		•		
	U270-04B	•	•	•	•	•	•	•	•		
LISA	U100 / U110										
	U120 / U130	•		•	•	•	•		•		
	U200-00S										
	U200-01S / U260-01S U270-01S	•		•	•	•	•		•		
	U230-01S	•		•	•	•	•		•		
	U200-02S / U260-02S U270-02S	•		•	•	•	•		•		
	U200-52S	•		•	•	•	•		•		
	U200-62S	•		•	•	•	•		•		
	U270-62S / U270-63S U270-68S	•		•	•	•	•		•		
	U200-03S / U201-03S U201-03A	•		•	•	•	•		•		
	U200-83S / U201-83S	•		•	•	•	•		•		
TOBY	L4006-01A	•	•					•			
	L4006-51A	•	•					•			
	L4106-01A	•	•					•			
	L4106-51A	•	•					•			
	L4206-01A	•	•					•			
	L4206-51A	•	•					•			
	L4906-01A	•	•					•			
	L4906-50A	•		•				•			
	L4906-51A	•	•					•			
	L200-00S / L210-00S										
	L200-02S / L210-02S			•		•	•			•	
	L200-03S / L210-03S L280-03S			•		•	•			•	
	L201-01S										
	L201-02S										
	L210-60S										
	L210-62S			•		•	•			•	

	AT command	Audio interface and tuning									
		+USGC	+USPEECHINFO	+USPM	+USTN	+USTOPFILE	+UTGN	+UTI	+UUBF	+UVGC	
	L200-03A / L210-03A L280-03A			•		•	•			•	
	L280-02S			•		•	•			•	
	L220-02S			•		•	•			•	
	L220-62S										
	R200-02B / R202-02B	•	•	•	•	•	•		•		
LARA	R202-02B	•	•	•	•	•	•		•		
	R203-02B	•	•	•	•	•	•		•		
	R204-02B			•							
	R211-02B	•	•	•	•	•	•		•		
	R220-62B										
	R280-02B	•	•	•	•	•	•		•		
MPCI	L200-00S / L210-00S										
	L201-01S										
	L201-02S										
	L210-60S										
	L200-02S / L210-02S										
	L200-03S / L210-03S L280-03S										
	L220-02S										
	L220-62S										
	L280-02S										

	AT command	Call control																					
		+CHUP	+CMOD	+CSNS	+CSTA	+CSVM	+UCALLSTAT	+UEMC	+UEMN	+UPROGRESS	+UVTS	+VTD	+VTS	A	D	D>	DL	L	M	P	S0	T	
LEON	G100-06S	•	•	•	•		•					•	•	•	•	•	•	•	•	•	•	•	
	G100-07S / G100-08S	•	•	•	•		•					•	•	•	•	•	•	•	•	•	•	•	
SARA	G300-00S / G310-00S	•	•	•	•		•							•	•						•		
	G340-00S / G350-00S	•	•	•	•		•					•	•	•	•	•	•	•	•	•	•	•	
	G350-00X	•	•	•	•		•					•	•	•	•	•	•	•	•	•	•	•	
	G340-01S / G350-01S G350-01B	•	•	•	•		•					•	•	•	•	•	•	•	•	•	•	•	
	G340-02S / G350-02S G350-02A	•	•	•	•		•					•	•	•	•	•	•	•	•	•	•	•	
	G340-02X / G350-02X	•	•	•	•		•					•	•	•	•	•	•	•	•	•	•	•	
	G450-00C																				•		
	U201-03A / U201-03B U201-03X	•	•	•	•	•	•	•	•	•	•	•	•	•	•	•	•	•	•	•	•	•	
	U201-63B	•	•	•	•	•	•	•	•	•	•	•	•	•	•	•	•	•	•	•	•	•	
	U201-04A / U201-04B U201-04X	•	•	•	•	•	•	•	•	•	•	•	•	•	•	•	•	•	•	•	•	•	
	U260-00S / U280-00S	•	•	•	•	•	•			•	•	•	•	•	•	•	•	•	•	•	•	•	
	U270-00S / U270-00X	•	•	•	•	•	•			•	•	•	•	•	•	•	•	•	•	•	•	•	
	U260-03S / U280-03S	•	•	•	•	•	•	•	•	•	•	•	•	•	•	•	•	•	•	•	•	•	
	U270-03A / U270-03S	•	•	•	•	•	•	•	•	•	•	•	•	•	•	•	•	•	•	•	•	•	
	U270-53S	•	•	•	•	•	•	•	•	•	•	•	•	•	•	•	•	•	•	•	•	•	
	U270-73S	•	•	•	•	•	•	•	•	•	•	•	•	•	•	•	•	•	•	•	•	•	
	U270-04B	•	•	•	•	•	•	•	•	•	•	•	•	•	•	•	•	•	•	•	•	•	
LISA	U100 / U110	•	•	•	•	•	•			•				•	•	•	•	•	•	•	•	•	
	U120 / U130	•	•	•	•	•	•			•	•	•	•	•	•	•	•	•	•	•	•	•	
	U200-00S	•	•	•	•	•	•			•	•			•	•	•	•	•	•	•	•	•	
	U200-01S / U260-01S U270-01S	•	•	•	•	•	•			•	•	•	•	•	•	•	•	•	•	•	•	•	
	U230-01S	•	•	•	•	•	•			•	•	•	•	•	•	•	•	•	•	•	•	•	
	U200-02S / U260-02S U270-02S	•	•	•	•	•	•			•	•	•	•	•	•	•	•	•	•	•	•	•	
	U200-52S	•	•	•	•	•	•			•	•	•	•	•	•	•	•	•	•	•	•	•	
	U200-62S	•	•	•	•	•	•			•	•	•	•	•	•	•	•	•	•	•	•	•	
	U270-62S / U270-63S U270-68S	•	•	•	•	•	•			•	•	•	•	•	•	•	•	•	•	•	•	•	
	U200-03S / U201-03S U201-03A	•	•	•	•	•	•	•	•	•	•	•	•	•	•	•	•	•	•	•	•	•	
	U200-83S / U201-83S	•	•	•	•	•	•	•	•	•	•	•	•	•	•	•	•	•	•	•	•	•	
TOBY	L4006-01A	•	•	•	•	•	•	•	•	•	•	•	•	•	•			•	•	•	•		
	L4006-51A	•	•	•	•	•	•	•	•	•	•	•	•	•	•			•	•	•	•		
	L4106-01A	•	•	•	•	•	•	•	•	•	•	•	•	•	•			•	•	•	•		
	L4106-51A	•	•	•	•	•	•	•	•	•	•	•	•	•	•			•	•	•	•		
	L4206-01A	•	•	•	•	•	•	•	•	•	•	•	•	•	•			•	•	•	•		
	L4206-51A	•	•	•	•	•	•	•	•	•	•	•	•	•	•			•	•	•	•		
	L4906-01A	•	•	•	•	•	•	•	•	•	•	•	•	•	•			•	•	•	•		
	L4906-50A	•	•	•	•	•	•	•	•	•	•	•	•	•	•			•	•	•	•		
	L4906-51A	•	•	•	•	•	•	•	•	•	•	•	•	•	•			•	•	•	•		
	L200-00S / L210-00S	•	•		•									•	•						•		
	L200-02S / L210-02S	•	•		•	•	•			•	•	•	•	•	•			•	•	•	•	•	
	L200-03S / L210-03S L280-03S	•	•		•	•	•			•	•	•	•	•	•			•	•	•	•	•	
	L201-01S	•	•		•									•	•						•		
	L201-02S	•	•		•									•	•						•		
	L210-60S	•	•		•									•	•						•		
	L210-62S	•	•		•	•	•			•	•	•	•	•	•			•	•	•	•	•	

	AT command	Call control																					
		+CHUP	+CMOD	+CSNS	+CSTA	+CSVM	+UCALLSTAT	+UEMC	+UEMN	+UPROGRESS	+UVTS	+VTD	+VTS	A	D	D>	DL	L	M	P	S0	T	
	L200-03A / L210-03A L280-03A	•	•		•	•	•			•	•	•	•	•	•			•	•	•	•	•	
	L280-02S	•	•		•	•	•			•	•	•	•	•	•			•	•	•	•	•	
	L220-02S	•	•		•	•	•			•	•	•	•	•	•			•	•	•	•	•	
	L220-62S																	•	•		•		
	R200-02B / R202-02B	•	•	•	•	•	•	•	•	•	•	•	•	•	•	•	•	•	•	•	•	•	
LARA	R202-02B	•	•	•	•	•	•	•	•	•	•	•	•	•	•	•	•	•	•	•	•	•	
	R203-02B	•	•	•	•	•	•	•	•	•	•	•	•	•	•	•	•	•	•	•	•	•	
	R204-02B	•	•			•			•					•	•	•	•	•	•	•	•	•	
	R211-02B	•	•	•	•	•	•	•	•	•	•	•	•	•	•	•	•	•	•	•	•	•	
	R220-62B	•	•						•					•	•	•	•	•	•	•	•	•	
	R280-02B	•	•	•	•	•	•	•	•	•	•	•	•	•	•	•	•	•	•	•	•	•	
MPCI	L200-00S / L210-00S	•	•		•		•							•	•						•		
	L201-01S	•	•		•									•	•						•		
	L201-02S	•	•		•									•	•						•		
	L210-60S	•	•		•		•							•	•						•		
	L200-02S / L210-02S	•	•		•	•	•			•	•	•	•	•	•			•	•	•	•	•	
	L200-03S / L210-03S L280-03S	•	•		•	•	•			•	•	•	•	•	•			•	•	•	•	•	
	L220-02S	•	•		•	•	•			•	•	•	•	•	•			•	•	•	•	•	
	L220-62S																	•	•		•		
	L280-02S	•	•		•	•	•			•	•	•	•	•	•			•	•	•	•	•	

	AT command	Circuit switched data services									
		+CBST	+CR	+CRC	+CRLP	+FCLASS	+UCSD	+UCSDA	+UCSND	+UDCONF=32	
LEON	G100-06S	•	•	•	•	•	•	•	•		
	G100-07S / G100-08S	•	•	•	•	•	•	•	•		
SARA	G300-00S / G310-00S	•	•	•	•	•					
	G340-00S / G350-00S	•	•	•	•	•	•	•	•		
	G350-00X	•	•	•	•	•	•	•	•		
	G340-01S / G350-01S G350-01B	•	•	•	•	•	•	•	•		
	G340-02S / G350-02S G350-02A	•	•	•	•	•	•	•	•		
	G340-02X / G350-02X	•	•	•	•	•	•	•	•		
	G450-00C										
	U201-03A / U201-03B U201-03X	•	•	•	•	•				•	
	U201-63B	•	•	•	•	•				•	
	U201-04A / U201-04B U201-04X	•	•	•	•	•				•	
	U260-00S / U280-00S	•	•	•	•	•				•	
	U270-00S / U270-00X	•	•	•	•	•				•	
	U260-03S / U280-03S	•	•	•	•	•				•	
	U270-03A / U270-03S	•	•	•	•	•				•	
	U270-53S	•	•	•	•	•				•	
	U270-73S	•	•	•	•	•				•	
	U270-04B	•	•	•	•	•				•	
LISA	U100 / U110	•	•	•	•	•					
	U120 / U130	•	•	•	•	•					
	U200-00S	•	•	•	•	•					
	U200-01S / U260-01S U270-01S	•	•	•	•	•				•	
	U230-01S	•	•	•	•	•				•	
	U200-02S / U260-02S U270-02S	•	•	•	•	•				•	
	U200-52S	•	•	•	•	•				•	
	U200-62S	•	•	•	•	•				•	
	U270-62S / U270-63S U270-68S	•	•	•	•	•				•	
	U200-03S / U201-03S U201-03A	•	•	•	•	•				•	
	U200-83S / U201-83S	•	•	•	•	•				•	
TOBY	L4006-01A			•		•					
	L4006-51A			•		•					
	L4106-01A			•		•					
	L4106-51A			•		•					
	L4206-01A			•		•					
	L4206-51A			•		•					
	L4906-01A			•		•					
	L4906-50A			•		•					
	L4906-51A			•		•					
	L200-00S / L210-00S			•		•					
	L200-02S / L210-02S			•		•					
	L200-03S / L210-03S L280-03S			•		•					
	L201-01S			•		•					
	L201-02S			•		•					
	L210-60S			•		•					
	L210-62S			•		•					

	AT command	Circuit switched data services									
		+CBST	+CR	+CRC	+CRLP	+FCLASS	+UCSD	+UCSDA	+UCSND	+UDCONF=32	
	L200-03A / L210-03A L280-03A			•		•					
	L280-02S			•		•					
	L220-02S			•		•					
	L220-62S			•		•					
	R200-02B / R202-02B	•	•	•	•	•				•	
LARA	R202-02B	•	•	•	•	•				•	
	R203-02B	•	•	•	•	•				•	
	R204-02B										
	R211-02B	•	•	•	•	•				•	
	R220-62B										
	R280-02B	•	•	•	•	•				•	
MPCI	L200-00S / L210-00S			•		•					
	L201-01S			•		•					
	L201-02S			•		•					
	L210-60S			•		•					
	L200-02S / L210-02S			•		•					
	L200-03S / L210-03S L280-03S			•		•					
	L220-02S			•		•					
	L220-62S			•		•					
	L280-02S			•		•					

	AT command	eCall							
		+CECALL	+UDCONF=90	+UECALLCFG	+UECALLDATA	+UECALLSTAT	+UECALLTYPE	+UECALLVOICE	
LEON	G100-06S	•							
	G100-07S / G100-08S	•	•		•	•	•	•	
SARA	G300-00S / G310-00S								
	G340-00S / G350-00S				•	•	•	•	
	G350-00X				•	•	•	•	
	G340-01S / G350-01S G350-01B				•	•	•	•	
	G340-02S / G350-02S G350-02A	•	•		•	•	•	•	
	G340-02X / G350-02X	•	•		•	•	•	•	
	G450-00C								
	U201-03A / U201-03B U201-03X	•	•		•	•	•	•	
	U201-63B	•	•		•	•	•	•	
	U201-04A / U201-04B U201-04X	•	•		•	•	•	•	
	U260-00S / U280-00S								
	U270-00S / U270-00X	•	•		•	•	•	•	
	U260-03S / U280-03S								
	U270-03A / U270-03S	•	•		•	•	•	•	
	U270-53S	•	•		•	•	•	•	
	U270-73S	•	•		•	•	•	•	
	U270-04B	•	•		•	•	•	•	
LISA	U100 / U110								
	U120 / U130					•	•		
	U200-00S								
	U200-01S / U260-01S U270-01S								
	U230-01S								
	U200-02S / U260-02S U270-02S				•	•	•	•	
	U200-52S				•	•	•	•	
	U200-62S				•	•	•	•	
	U270-62S / U270-63S U270-68S				•	•	•	•	
	U200-03S / U201-03S U201-03A	•	•		•	•	•	•	
	U200-83S / U201-83S	•	•		•	•	•	•	
TOBY	L4006-01A								
	L4006-51A								
	L4106-01A	•	•	•	•	•		•	
	L4106-51A	•	•	•	•	•		•	
	L4206-01A								
	L4206-51A								
	L4906-01A								
	L4906-50A								
	L4906-51A								
	L200-00S / L210-00S								
	L200-02S / L210-02S								
	L200-03S / L210-03S L280-03S								
	L201-01S								
	L201-02S								
	L210-60S								
	L210-62S								

	AT command	eCall							
		+CECALL	+UDCONF=90	+UECALLCFG	+UECALLDATA	+UECALLSTAT	+UECALLTYPE	+UECALLVOICE	
	L200-03A / L210-03A								
	L280-03A								
	L280-02S								
	L220-02S								
	L220-62S								
	R200-02B / R202-02B								
LARA	R202-02B								
	R203-02B								
	R204-02B								
	R211-02B								
	R220-62B								
	R280-02B								
MPCI	L200-00S / L210-00S								
	L201-01S								
	L201-02S								
	L210-60S								
	L200-02S / L210-02S								
	L200-03S / L210-03S								
	L280-03S								
	L220-02S								
	L220-62S								
	L280-02S								

	AT command	FAX class 2																						
		+FAA	+FAP	+FBO	+FBS	+FBU	+FCC	+FCQ	+FCR	+FCS	+FCT	+FDR	+FDT	+FEA	+FFC	+FFD	+FHS	+FIE	+FIP	+FIS	+FIT	+FK	+FLI	+FLO
LEON	G100-06S	•	•	•	•	•	•	•	•	•	•	•	•	•	•	•	•	•	•	•	•	•	•	•
	G100-07S / G100-08S	•	•	•	•	•	•	•	•	•	•	•	•	•	•	•	•	•	•	•	•	•	•	•
SARA	G300-00S / G310-00S																							
	G340-00S / G350-00S	•	•	•	•	•	•	•	•	•	•	•	•	•	•	•	•	•	•	•	•	•	•	•
	G350-00X	•	•	•	•	•	•	•	•	•	•	•	•	•	•	•	•	•	•	•	•	•	•	•
	G340-01S / G350-01S G350-01B	•	•	•	•	•	•	•	•	•	•	•	•	•	•	•	•	•	•	•	•	•	•	•
	G340-02S / G350-02S G350-02A	•	•	•	•	•	•	•	•	•	•	•	•	•	•	•	•	•	•	•	•	•	•	•
	G340-02X / G350-02X	•	•	•	•	•	•	•	•	•	•	•	•	•	•	•	•	•	•	•	•	•	•	•
	G450-00C																							
	U201-03A / U201-03B U201-03X																							
	U201-63B																							
	U201-04A / U201-04B U201-04X																							
	U260-00S / U280-00S																							
	U270-00S / U270-00X																							
	U260-03S / U280-03S																							
	U270-03A / U270-03S																							
	U270-53S																							
	U270-73S																							
	U270-04B																							
LISA	U100 / U110																							
	U120 / U130																							
	U200-00S																							
	U200-01S / U260-01S U270-01S																							
	U230-01S																							
	U200-02S / U260-02S U270-02S																							
	U200-52S																							
	U200-62S																							
	U270-62S / U270-63S U270-68S																							
	U200-03S / U201-03S U201-03A																							
	U200-83S / U201-83S																							
TOBY	L4006-01A																							
	L4006-51A																							
	L4106-01A																							
	L4106-51A																							
	L4206-01A																							
	L4206-51A																							
	L4906-01A																							
	L4906-50A																							
	L4906-51A																							
	L200-00S / L210-00S																							
	L200-02S / L210-02S																							
	L200-03S / L210-03S L280-03S																							
	L201-01S																							
	L201-02S																							
	L210-60S																							
	L210-62S																							

	AT command	FAX class 2																							
		+FAA	+FAP	+FBO	+FBS	+FBU	+FCC	+FCQ	+FCR	+FCS	+FCT	+FDR	+FDT	+FEA	+FFC	+FFD	+FHS	+FIE	+FIP	+FIS	+FIT	+FK	+FLI	+FLO
	L200-03A / L210-03A																								
	L280-03A																								
	L280-02S																								
	L220-02S																								
	L220-62S																								
	R200-02B / R202-02B																								
LARA	R202-02B																								
	R203-02B																								
	R204-02B																								
	R211-02B																								
	R220-62B																								
	R280-02B																								
MPCI	L200-00S / L210-00S																								
	L201-01S																								
	L201-02S																								
	L210-60S																								
	L200-02S / L210-02S																								
	L200-03S / L210-03S																								
	L280-03S																								
	L220-02S																								
	L220-62S																								
	L280-02S																								

	AT command	FAX class 2																
		+FLP	+FMI	+FMM	+FMR	+FMS	+FND	+FNR	+FNS	+FPA	+FPI	+FPP	+FPS	+FPW	+FRQ	+FRY	+FSA	+FSP
LEON	G100-06S	•	•	•	•	•	•	•	•	•	•	•	•	•	•	•	•	•
	G100-07S / G100-08S	•	•	•	•	•	•	•	•	•	•	•	•	•	•	•	•	•
SARA	G300-00S / G310-00S																	
	G340-00S / G350-00S	•	•	•	•	•	•	•	•	•	•	•	•	•	•	•	•	•
	G350-00X	•	•	•	•	•	•	•	•	•	•	•	•	•	•	•	•	•
	G340-01S / G350-01S G350-01B	•	•	•	•	•	•	•	•	•	•	•	•	•	•	•	•	•
	G340-02S / G350-02S G350-02A	•	•	•	•	•	•	•	•	•	•	•	•	•	•	•	•	•
	G340-02X / G350-02X	•	•	•	•	•	•	•	•	•	•	•	•	•	•	•	•	•
	G450-00C																	
	U201-03A / U201-03B U201-03X																	
	U201-63B																	
	U201-04A / U201-04B U201-04X																	
	U260-00S / U280-00S																	
	U270-00S / U270-00X																	
	U260-03S / U280-03S																	
	U270-03A / U270-03S																	
	U270-53S																	
	U270-73S																	
	U270-04B																	
LISA	U100 / U110																	
	U120 / U130																	
	U200-00S																	
	U200-01S / U260-01S U270-01S																	
	U230-01S																	
	U200-02S / U260-02S U270-02S																	
	U200-52S																	
	U200-62S																	
	U270-62S / U270-63S U270-68S																	
	U200-03S / U201-03S U201-03A																	
	U200-83S / U201-83S																	
TOBY	L4006-01A																	
	L4006-51A																	
	L4106-01A																	
	L4106-51A																	
	L4206-01A																	
	L4206-51A																	
	L4906-01A																	
	L4906-50A																	
	L4906-51A																	
	L200-00S / L210-00S																	
	L200-02S / L210-02S																	
	L200-03S / L210-03S L280-03S																	
	L201-01S																	
	L201-02S																	
	L210-60S																	
	L210-62S																	

	AT command	FAX class 2																	
		+FLP	+FMI	+FMM	+FMR	+FMS	+FND	+FNR	+FNS	+FPA	+FPI	+FPP	+FPS	+FPW	+FRQ	+FRY	+FSA	+FSP	
	L200-03A / L210-03A																		
	L280-03A																		
	L280-02S																		
	L220-02S																		
	L220-62S																		
	R200-02B / R202-02B																		
LARA	R202-02B																		
	R203-02B																		
	R204-02B																		
	R211-02B																		
	R220-62B																		
	R280-02B																		
MPCI	L200-00S / L210-00S																		
	L201-01S																		
	L201-02S																		
	L210-60S																		
	L200-02S / L210-02S																		
	L200-03S / L210-03S																		
	L280-03S																		
	L220-02S																		
	L220-62S																		
	L280-02S																		

	AT command	File System					
		+UDELFILE	+UDWNFILE	+ULSTFILE	+URDBLOCK	+URDFILE	
LEON	G100-06S	•	•	•	•	•	
	G100-07S / G100-08S	•	•	•	•	•	
SARA	G300-00S / G310-00S						
	G340-00S / G350-00S	•	•	•	•	•	
	G350-00X	•	•	•	•	•	
	G340-01S / G350-01S G350-01B	•	•	•	•	•	
	G340-02S / G350-02S G350-02A	•	•	•	•	•	
	G340-02X / G350-02X	•	•	•	•	•	
	G450-00C	•	•	•	•	•	
	U201-03A / U201-03B U201-03X	•	•	•	•	•	
	U201-63B	•	•	•	•	•	
	U201-04A / U201-04B U201-04X	•	•	•	•	•	
	U260-00S / U280-00S	•	•	•	•	•	
	U270-00S / U270-00X	•	•	•	•	•	
	U260-03S / U280-03S	•	•	•	•	•	
	U270-03A / U270-03S	•	•	•	•	•	
	U270-53S	•	•	•	•	•	
	U270-73S	•	•	•	•	•	
	U270-04B	•	•	•	•	•	
LISA	U100 / U110	•	•	•		•	
	U120 / U130	•	•	•		•	
	U200-00S	•	•	•		•	
	U200-01S / U260-01S U270-01S	•	•	•		•	
	U230-01S	•	•	•		•	
	U200-02S / U260-02S U270-02S	•	•	•	•	•	
	U200-52S	•	•	•	•	•	
	U200-62S	•	•	•	•	•	
	U270-62S / U270-63S U270-68S	•	•	•	•	•	
	U200-03S / U201-03S U201-03A	•	•	•	•	•	
	U200-83S / U201-83S	•	•	•	•	•	
TOBY	L4006-01A	•	•			•	
	L4006-51A	•	•			•	
	L4106-01A	•	•			•	
	L4106-51A	•	•			•	
	L4206-01A	•	•			•	
	L4206-51A	•	•			•	
	L4906-01A	•	•			•	
	L4906-50A	•	•			•	
	L4906-51A	•	•			•	
	L200-00S / L210-00S						
	L200-02S / L210-02S	•	•	•	•	•	
	L200-03S / L210-03S L280-03S	•	•	•	•	•	
	L201-01S	•	•	•	•	•	
	L201-02S	•	•	•	•	•	
	L210-60S						
	L210-62S	•	•	•	•	•	

	AT command	File System					
		+UDELFILE	+UDWNFILE	+ULSTFILE	+URDBLOCK	+URDFILE	
LARA	L200-03A / L210-03A L280-03A	•	•	•	•	•	
	L280-02S	•	•	•	•	•	
	L220-02S	•	•	•	•	•	
	L220-62S	•	•	•	•	•	
	R200-02B / R202-02B	•	•	•	•	•	
	R202-02B	•	•	•	•	•	
	R203-02B	•	•	•	•	•	
	R204-02B	•	•	•	•	•	
	R211-02B	•	•	•	•	•	
	R220-62B	•	•	•	•	•	
	R280-02B	•	•	•	•	•	
MPCI	L200-00S / L210-00S						
	L201-01S	•	•	•	•	•	
	L201-02S	•	•	•	•	•	
	L210-60S						
	L200-02S / L210-02S	•	•	•	•	•	
	L200-03S / L210-03S L280-03S	•	•	•	•	•	
	L220-02S	•	•	•	•	•	
	L220-62S	•	•	•	•	•	
	L280-02S	•	•	•	•	•	

	AT command	General commands															
		&H	+CCID	+CGMI	+CGMM	+CGMR	+CGSN	+CIMI	+CLAC	+CSCS	+GCAP	+GMI	+GMM	+GMR	+GSN	A/	I
LEON	G100-06S	•	•	•	•	•	•	•	•	•	•	•	•	•	•	•	•
	G100-07S / G100-08S	•	•	•	•	•	•	•	•	•	•	•	•	•	•	•	•
SARA	G300-00S / G310-00S	•	•	•	•	•	•	•	•	•	•	•	•	•	•	•	•
	G340-00S / G350-00S	•	•	•	•	•	•	•	•	•	•	•	•	•	•	•	•
	G350-00X	•	•	•	•	•	•	•	•	•	•	•	•	•	•	•	•
	G340-01S / G350-01S G350-01B	•	•	•	•	•	•	•	•	•	•	•	•	•	•	•	•
	G340-02S / G350-02S G350-02A	•	•	•	•	•	•	•	•	•	•	•	•	•	•	•	•
	G340-02X / G350-02X	•	•	•	•	•	•	•	•	•	•	•	•	•	•	•	•
	G450-00C		•	•	•	•	•	•		•	•	•	•	•	•	•	•
	U201-03A / U201-03B U201-03X	•	•	•	•	•	•	•	•	•	•	•	•	•	•	•	•
	U201-63B	•	•	•	•	•	•	•	•	•	•	•	•	•	•	•	•
	U201-04A / U201-04B U201-04X	•	•	•	•	•	•	•	•	•	•	•	•	•	•	•	•
	U260-00S / U280-00S	•	•	•	•	•	•	•	•	•	•	•	•	•	•	•	•
	U270-00S / U270-00X	•	•	•	•	•	•	•	•	•	•	•	•	•	•	•	•
	U260-03S / U280-03S	•	•	•	•	•	•	•	•	•	•	•	•	•	•	•	•
	U270-03A / U270-03S	•	•	•	•	•	•	•	•	•	•	•	•	•	•	•	•
	U270-53S	•	•	•	•	•	•	•	•	•	•	•	•	•	•	•	•
	U270-73S	•	•	•	•	•	•	•	•	•	•	•	•	•	•	•	•
	U270-04B	•	•	•	•	•	•	•	•	•	•	•	•	•	•	•	•
LISA	U100 / U110	•	•	•	•	•	•	•	•	•	•	•	•	•	•	•	•
	U120 / U130	•	•	•	•	•	•	•	•	•	•	•	•	•	•	•	•
	U200-00S	•	•	•	•	•	•	•	•	•	•	•	•	•	•	•	•
	U200-01S / U260-01S U270-01S	•	•	•	•	•	•	•	•	•	•	•	•	•	•	•	•
	U230-01S	•	•	•	•	•	•	•	•	•	•	•	•	•	•	•	•
	U200-02S / U260-02S U270-02S	•	•	•	•	•	•	•	•	•	•	•	•	•	•	•	•
	U200-52S	•	•	•	•	•	•	•	•	•	•	•	•	•	•	•	•
	U200-62S	•	•	•	•	•	•	•	•	•	•	•	•	•	•	•	•
	U270-62S / U270-63S U270-68S	•	•	•	•	•	•	•	•	•	•	•	•	•	•	•	•
	U200-03S / U201-03S U201-03A	•	•	•	•	•	•	•	•	•	•	•	•	•	•	•	•
	U200-83S / U201-83S	•	•	•	•	•	•	•	•	•	•	•	•	•	•	•	•
TOBY	L4006-01A		•	•	•	•	•	•		•	•	•	•	•	•		•
	L4006-51A		•	•	•	•	•	•		•	•	•	•	•	•		•
	L4106-01A		•	•	•	•	•	•		•	•	•	•	•	•		•
	L4106-51A		•	•	•	•	•	•		•	•	•	•	•	•		•
	L4206-01A		•	•	•	•	•	•		•	•	•	•	•	•		•
	L4206-51A		•	•	•	•	•	•		•	•	•	•	•	•		•
	L4906-01A		•	•	•	•	•	•		•	•	•	•	•	•		•
	L4906-50A		•	•	•	•	•	•		•	•	•	•	•	•		•
	L4906-51A		•	•	•	•	•	•		•	•	•	•	•	•		•
	L200-00S / L210-00S	•	•	•	•	•	•	•	•	•	•	•	•	•	•	•	•
	L200-02S / L210-02S	•	•	•	•	•	•	•	•	•	•	•	•	•	•	•	•
	L200-03S / L210-03S L280-03S	•	•	•	•	•	•	•	•	•	•	•	•	•	•	•	•
	L201-01S	•	•	•	•	•	•	•	•	•	•	•	•	•	•	•	•
	L201-02S	•	•	•	•	•	•	•	•	•	•	•	•	•	•	•	•
	L210-60S	•	•	•	•	•	•	•	•	•	•	•	•	•	•	•	•
	L210-62S	•	•	•	•	•	•	•	•	•	•	•	•	•	•	•	•

	AT command	General commands															
		&H	+CCID	+CGMI	+CGMM	+CGMR	+CGSN	+CIMI	+CLAC	+CSCS	+GCAP	+GMI	+GMM	+GMR	+GSN	A/	I
	L200-03A / L210-03A L280-03A	•	•	•	•	•	•	•	•	•	•	•	•	•	•	•	•
	L280-02S	•	•	•	•	•	•	•	•	•	•	•	•	•	•	•	•
	L220-02S	•	•	•	•	•	•	•	•	•	•	•	•	•	•	•	•
	L220-62S	•	•	•	•	•	•	•	•	•	•	•	•	•	•	•	•
	R200-02B / R202-02B	•	•	•	•	•	•	•	•	•	•	•	•	•	•	•	•
LARA	R202-02B	•	•	•	•	•	•	•	•	•	•	•	•	•	•	•	•
	R203-02B	•	•	•	•	•	•	•	•	•	•	•	•	•	•	•	•
	R204-02B	•	•	•	•	•	•	•	•	•	•	•	•	•	•	•	•
	R211-02B	•	•	•	•	•	•	•	•	•	•	•	•	•	•	•	•
	R220-62B	•	•	•	•	•	•	•	•	•	•	•	•	•	•	•	•
	R280-02B	•	•	•	•	•	•	•	•	•	•	•	•	•	•	•	•
MPCI	L200-00S / L210-00S	•	•	•	•	•	•	•	•	•	•	•	•	•	•	•	•
	L201-01S	•	•	•	•	•	•	•	•	•	•	•	•	•	•	•	•
	L201-02S	•	•	•	•	•	•	•	•	•	•	•	•	•	•	•	•
	L210-60S	•	•	•	•	•	•	•	•	•	•	•	•	•	•	•	•
	L200-02S / L210-02S	•	•	•	•	•	•	•	•	•	•	•	•	•	•	•	•
	L200-03S / L210-03S L280-03S	•	•	•	•	•	•	•	•	•	•	•	•	•	•	•	•
	L220-02S	•	•	•	•	•	•	•	•	•	•	•	•	•	•	•	•
	L220-62S	•	•	•	•	•	•	•	•	•	•	•	•	•	•	•	•
	L280-02S	•	•	•	•	•	•	•	•	•	•	•	•	•	•	•	•

	AT command	GPIO interface			
		+UGPIOC	+UGPIOR	+UGPIOW	
LEON	G100-06S	•	•	•	
	G100-07S / G100-08S	•	•	•	
SARA	G300-00S / G310-00S				
	G340-00S / G350-00S	•	•	•	
	G350-00X	•	•	•	
	G340-01S / G350-01S G350-01B	•	•	•	
	G340-02S / G350-02S G350-02A	•	•	•	
	G340-02X / G350-02X	•	•	•	
	G450-00C	•	•	•	
	U201-03A / U201-03B U201-03X	•	•	•	
	U201-63B	•	•	•	
	U201-04A / U201-04B U201-04X	•	•	•	
	U260-00S / U280-00S	•	•	•	
	U270-00S / U270-00X	•	•	•	
	U260-03S / U280-03S	•	•	•	
	U270-03A / U270-03S	•	•	•	
	U270-53S	•	•	•	
	U270-73S	•	•	•	
	U270-04B	•	•	•	
LISA	U100 / U110	•	•	•	
	U120 / U130	•	•	•	
	U200-00S	•	•	•	
	U200-01S / U260-01S U270-01S	•	•	•	
	U230-01S	•	•	•	
	U200-02S / U260-02S U270-02S	•	•	•	
	U200-52S	•	•	•	
	U200-62S	•	•	•	
	U270-62S / U270-63S U270-68S	•	•	•	
	U200-03S / U201-03S U201-03A	•	•	•	
	U200-83S / U201-83S	•	•	•	
TOBY	L4006-01A	•	•	•	
	L4006-51A	•	•	•	
	L4106-01A	•	•	•	
	L4106-51A	•	•	•	
	L4206-01A	•	•	•	
	L4206-51A	•	•	•	
	L4906-01A	•	•	•	
	L4906-50A	•	•	•	
	L4906-51A	•	•	•	
	L200-00S / L210-00S				
	L200-02S / L210-02S	•	•	•	
	L200-03S / L210-03S L280-03S	•	•	•	
	L201-01S				
	L201-02S	•	•	•	
	L210-60S				
	L210-62S	•	•	•	

	AT command	GPIO interface			
		+UGPIOC	+UGPIOR	+UGPIOW	
LARA	L200-03A / L210-03A L280-03A	•	•	•	
	L280-02S	•	•	•	
	L220-02S	•	•	•	
	L220-62S	•	•	•	
	R200-02B / R202-02B	•	•	•	
	R202-02B	•	•	•	
	R203-02B	•	•	•	
	R204-02B	•	•	•	
	R211-02B	•	•	•	
	R220-62B	•	•	•	
	R280-02B	•	•	•	
MPCI	L200-00S / L210-00S				
	L201-01S				
	L201-02S				
	L210-60S				
	L200-02S / L210-02S				
	L200-03S / L210-03S L280-03S				
	L220-02S				
	L220-62S				
	L280-02S				

	AT command	I2C interface					
		+UI2CC	+UI2CO	+UI2CR	+UI2CREGR	+UI2CW	
LEON	G100-06S						
	G100-07S / G100-08S						
SARA	G300-00S / G310-00S						
	G340-00S / G350-00S						
	G350-00X						
	G340-01S / G350-01S G350-01B						
	G340-02S / G350-02S G350-02A						
	G340-02X / G350-02X						
	G450-00C						
	U201-03A / U201-03B U201-03X	•	•	•	•	•	
	U201-63B	•	•	•	•	•	
	U201-04A / U201-04B U201-04X	•	•	•	•	•	
	U260-00S / U280-00S	•	•	•	•	•	
	U270-00S / U270-00X	•	•	•	•	•	
	U260-03S / U280-03S	•	•	•	•	•	
	U270-03A / U270-03S	•	•	•	•	•	
	U270-53S	•	•	•	•	•	
	U270-73S	•	•	•	•	•	
	U270-04B	•	•	•	•	•	
LISA	U100 / U110						
	U120 / U130						
	U200-00S						
	U200-01S / U260-01S U270-01S	•	•	•	•	•	
	U230-01S	•	•	•	•	•	
	U200-02S / U260-02S U270-02S	•	•	•	•	•	
	U200-52S	•	•	•	•	•	
	U200-62S	•	•	•	•	•	
	U270-62S / U270-63S U270-68S	•	•	•	•	•	
	U200-03S / U201-03S U201-03A	•	•	•	•	•	
	U200-83S / U201-83S	•	•	•	•	•	
TOBY	L4006-01A	•	•	•	•	•	
	L4006-51A	•	•	•	•	•	
	L4106-01A	•	•	•	•	•	
	L4106-51A	•	•	•	•	•	
	L4206-01A	•	•	•	•	•	
	L4206-51A	•	•	•	•	•	
	L4906-01A	•	•	•	•	•	
	L4906-50A						
	L4906-51A	•	•	•	•	•	
	L200-00S / L210-00S						
	L200-02S / L210-02S	•	•	•	•	•	
	L200-03S / L210-03S L280-03S	•	•	•	•	•	
	L201-01S						
	L201-02S						
	L210-60S						
	L210-62S	•	•	•	•	•	

	AT command	I2C interface					
		+UI2CC	+UI2CO	+UI2CR	+UI2CREGR	+UI2CW	
LARA	L200-03A / L210-03A L280-03A	•	•	•	•	•	
	L280-02S	•	•	•	•	•	
	L220-02S	•	•	•	•	•	
	L220-62S	•	•	•	•	•	
	R200-02B / R202-02B	•	•	•	•	•	
	R202-02B	•	•	•	•	•	
	R203-02B	•	•	•	•	•	
	R204-02B	•	•	•	•	•	
	R211-02B	•	•	•	•	•	
	R220-62B	•	•	•	•	•	
	R280-02B	•	•	•	•	•	
MPCI	L200-00S / L210-00S						
	L201-01S						
	L201-02S						
	L210-60S						
	L200-02S / L210-02S						
	L200-03S / L210-03S L280-03S						
	L220-02S						
	L220-62S						
	L280-02S						

	AT command	Internet suite																	
		+UDCONF=4	+UDNSRN	+UDYNDNS	+UFTP	+UFTPC	+UFTPER	+UHTTP	+UHTTPAC	+UHTTPC	+UHTTPER	+UPING	+USECCFG	+USECMNG	+USECPRF	+USMTP	+USMTPC	+USMTPER	+USMTPM
LEON	G100-06S		•		•	•	•	•		•	•	•				•	•	•	•
	G100-07S / G100-08S		•		•	•	•	•		•	•	•				•	•	•	•
SARA	G300-00S / G310-00S																		
	G340-00S / G350-00S	•	•	•	•	•	•	•		•	•	•				•	•	•	•
	G350-00X	•	•	•	•	•	•	•		•	•	•				•	•	•	•
	G340-01S / G350-01S G350-01B	•	•	•	•	•	•	•		•	•	•				•	•	•	•
	G340-02S / G350-02S G350-02A	•	•	•	•	•	•	•	•	•	•	•		•	•	•	•	•	•
	G340-02X / G350-02X	•	•	•	•	•	•	•	•	•	•	•		•	•	•	•	•	•
	G450-00C	•	•		•	•	•	•	•	•	•	•		•	•				
	U201-03A / U201-03B U201-03X	•	•	•	•	•	•	•	•	•	•	•		•	•				
	U201-63B	•	•	•	•	•	•	•	•	•	•	•		•	•				
	U201-04A / U201-04B U201-04X	•	•	•	•	•	•	•	•	•	•	•		•	•				
	U260-00S / U280-00S	•	•	•	•	•	•	•		•	•	•							
	U270-00S / U270-00X	•	•	•	•	•	•	•		•	•	•							
	U260-03S / U280-03S	•	•	•	•	•	•	•	•	•	•	•		•	•				
	U270-03A / U270-03S	•	•	•	•	•	•	•	•	•	•	•		•	•				
	U270-53S	•	•	•	•	•	•	•	•	•	•	•		•	•				
	U270-73S	•	•	•	•	•	•	•	•	•	•	•		•	•				
	U270-04B	•	•	•	•	•	•	•	•	•	•	•		•	•				
LISA	U100 / U110		•		•	•	•	•		•	•								
	U120 / U130		•		•	•	•	•		•	•								
	U200-00S		•		•	•	•	•		•	•								
	U200-01S / U260-01S U270-01S	•	•		•	•	•	•		•	•	•							
	U230-01S	•	•		•	•	•	•		•	•	•							
	U200-02S / U260-02S U270-02S	•	•	•	•	•	•	•		•	•	•							
	U200-52S	•	•	•	•	•	•	•		•	•	•							
	U200-62S	•	•	•	•	•	•	•		•	•	•							
	U270-62S / U270-63S U270-68S	•	•	•	•	•	•	•		•	•	•							
	U200-03S / U201-03S U201-03A	•	•	•	•	•	•	•	•	•	•	•		•	•				
	U200-83S / U201-83S	•	•	•	•	•	•	•	•	•	•	•		•	•				
TOBY	L4006-01A																		
	L4006-51A																		
	L4106-01A																		
	L4106-51A																		
	L4206-01A																		
	L4206-51A																		
	L4906-01A																		
	L4906-50A																		
	L4906-51A																		
	L200-00S / L210-00S																		
	L200-02S / L210-02S	•	•	•	•	•	•	•	•	•	•	•		•	•				
	L200-03S / L210-03S L280-03S	•	•	•	•	•	•	•	•	•	•	•	•	•	•				
	L201-01S		•	•	•	•	•	•	•	•	•								
	L201-02S		•	•	•	•	•	•	•	•	•		•	•	•				
	L210-60S																		
	L210-62S	•	•	•	•	•	•	•	•	•	•	•		•	•				

	AT command	Internet suite																		
		+UDCONF=4	+UDNSRN	+UDYNDNS	+UFTP	+UFTPC	+UFTPER	+UHTTP	+UHTTPAC	+UHTTPC	+UHTTPER	+UPING	+USECCFG	+USECMNG	+USECPRF	+USMTP	+USMTPC	+USMTPER	+USMTPM	
	L200-03A / L210-03A L280-03A	•	•	•	•	•	•	•	•	•	•	•	•	•	•					
	L280-02S	•	•	•	•	•	•	•	•	•	•	•		•	•					
	L220-02S	•	•	•	•	•	•	•	•	•	•	•		•	•					
	L220-62S	•	•	•	•	•	•	•	•	•	•	•		•	•					
	R200-02B / R202-02B	•	•	•	•	•	•	•	•	•	•	•		•	•					
LARA	R202-02B	•	•	•	•	•	•	•	•	•	•	•		•	•					
	R203-02B	•	•	•	•	•	•	•	•	•	•	•		•	•					
	R204-02B	•	•	•	•	•	•	•	•	•	•	•		•	•					
	R211-02B	•	•	•	•	•	•	•	•	•	•	•		•	•					
	R220-62B	•	•	•	•	•	•	•	•	•	•	•		•	•					
	R280-02B	•	•	•	•	•	•	•	•	•	•	•		•	•					
MPCI	L200-00S / L210-00S																			
	L201-01S		•	•	•	•	•	•	•	•	•									
	L201-02S		•	•	•	•	•	•	•	•	•		•	•	•					
	L210-60S																			
	L200-02S / L210-02S	•	•	•	•	•	•	•	•	•	•	•		•	•					
	L200-03S / L210-03S L280-03S	•	•	•	•	•	•	•	•	•	•	•		•	•					
	L220-02S	•	•	•	•	•	•	•	•	•	•	•		•	•					
	L220-62S	•	•	•	•	•	•	•	•	•	•	•		•	•					
	L280-02S	•	•	•	•	•	•	•	•	•	•	•		•	•					

	AT command	IP Multimedia Subsystem (IMS)																
		+CASIMS	+CAVIMS	+CEVDP	+CIREG	+CIREP	+CMMIVT	+CVDP	+UCMGS3GPP2	+UCMT3GPP2	+UICMGSMODE	+UIMSCFG	+UIMSCONF	+UIMSRCONF	+UIMSREG	+UISMS	+UISS	
LEON	G100-06S																	
	G100-07S / G100-08S																	
SARA	G300-00S / G310-00S																	
	G340-00S / G350-00S																	
	G350-00X																	
	G340-01S / G350-01S G350-01B																	
	G340-02S / G350-02S G350-02A																	
	G340-02X / G350-02X																	
	G450-00C																	
	U201-03A / U201-03B U201-03X																	
	U201-63B																	
	U201-04A / U201-04B U201-04X																	
	U260-00S / U280-00S																	
	U270-00S / U270-00X																	
	U260-03S / U280-03S																	
	U270-03A / U270-03S																	
	U270-53S																	
	U270-73S																	
	U270-04B																	
LISA	U100 / U110																	
	U120 / U130																	
	U200-00S																	
	U200-01S / U260-01S U270-01S																	
	U230-01S																	
	U200-02S / U260-02S U270-02S																	
	U200-52S																	
	U200-62S																	
	U270-62S / U270-63S U270-68S																	
	U200-03S / U201-03S U201-03A																	
	U200-83S / U201-83S																	
TOBY	L4006-01A																	
	L4006-51A																	
	L4106-01A																	
	L4106-51A																	
	L4206-01A																	
	L4206-51A																	
	L4906-01A																	
	L4906-50A																	
	L4906-51A																	
	L200-00S / L210-00S																	
	L200-02S / L210-02S																	
	L200-03S / L210-03S L280-03S																	
	L201-01S	•			•								•	•				
	L201-02S	•			•								•	•				
	L210-60S																	
	L210-62S																	

	AT command	IP Multimedia Subsystem (IMS)																
		+CASIMS	+CAVIMS	+CEVDP	+CIREG	+CIREP	+CMMIVT	+CVDP	+UCMGS3GPP2	+UCMT3GPP2	+UICMGSMODE	+UIMSCFG	+UIMSCONF	+UIMSRCONF	+UIMSREG	+UISMS	+UISS	
	L200-03A / L210-03A																	
	L280-03A																	
	L280-02S																	
	L220-02S																	
	L220-62S																	
	R200-02B / R202-02B			•	•	•	•	•				•			•			
LARA	R202-02B			•	•	•	•	•				•			•			
	R203-02B			•	•	•	•	•				•			•			
	R204-02B				•				•	•	•	•			•	•		
	R211-02B			•	•	•	•	•				•			•		•	
	R220-62B																	
	R280-02B																	
MPCI	L200-00S / L210-00S																	
	L201-01S	•			•								•	•				
	L201-02S	•			•								•	•				
	L210-60S																	
	L200-02S / L210-02S																	
	L200-03S / L210-03S																	
	L280-03S																	
	L220-02S																	
	L220-62S																	
	L280-02S																	

	AT command	Localization features																						
		+CMOLR	+CMOLRE	+CMTLR	+CMTLRA	+UDCONF=70	+UGAOF	+UGAOP	+UGAOS	+UGGGA	+UGGLL	+UGGSA	+UGGSV	+UGIND	+UGPRF	+UGPS	+UGRMC	+UGSRV	+UGTMR	+UGUBX	+UGVTG	+UGZDA	+ULCSEVT	+ULOC
LEON	G100-06S						•	•	•	•	•	•	•	•	•	•	•		•	•	•	•		•
	G100-07S / G100-08S						•	•	•	•	•	•	•	•	•	•	•		•	•	•	•		•
SARA	G300-00S / G310-00S																							
	G340-00S / G350-00S						•	•	•	•	•	•	•	•	•	•	•		•	•	•	•		•
	G350-00X						•	•	•	•	•	•	•	•	•	•	•		•	•	•	•		•
	G340-01S / G350-01S G350-01B						•	•	•	•	•	•	•	•	•	•	•	•	•	•	•	•		•
	G340-02S / G350-02S G350-02A						•	•	•	•	•	•	•	•	•	•	•	•	•	•	•	•		•
	G340-02X / G350-02X						•	•	•	•	•	•	•	•	•	•	•	•	•	•	•	•		•
	G450-00C																							
	U201-03A / U201-03B U201-03X	•	•	•	•	•	•	•	•	•	•	•	•	•	•	•	•	•	•	•	•	•	•	•
	U201-63B	•	•	•	•	•	•	•	•	•	•	•	•	•	•	•	•	•	•	•	•	•	•	•
	U201-04A / U201-04B U201-04X	•	•	•	•	•	•	•	•	•	•	•	•	•	•	•	•	•	•	•	•	•	•	•
	U260-00S / U280-00S						•	•	•	•	•	•	•	•	•	•	•	•	•	•	•	•		•
	U270-00S / U270-00X						•	•	•	•	•	•	•	•	•	•	•	•	•	•	•	•		•
	U260-03S / U280-03S	•	•	•	•	•	•	•	•	•	•	•	•	•	•	•	•	•	•	•	•	•	•	•
	U270-03A / U270-03S	•	•	•	•	•	•	•	•	•	•	•	•	•	•	•	•	•	•	•	•	•	•	•
	U270-53S	•	•	•	•	•	•	•	•	•	•	•	•	•	•	•	•	•	•	•	•	•	•	•
	U270-73S	•	•	•	•	•	•	•	•	•	•	•	•	•	•	•	•	•	•	•	•	•	•	•
	U270-04B	•	•	•	•	•	•	•	•	•	•	•	•	•	•	•	•	•	•	•	•	•	•	•
LISA	U100 / U110						•	•	•	•	•	•	•	•	•	•	•		•	•	•	•		•
	U120 / U130						•	•	•	•	•	•	•	•	•	•	•		•	•	•	•		•
	U200-00S																							
	U200-01S / U260-01S U270-01S						•	•	•	•	•	•	•	•	•	•	•		•	•	•	•		•
	U230-01S						•	•	•	•	•	•	•	•	•	•	•		•	•	•	•		•
	U200-02S / U260-02S U270-02S						•	•	•	•	•	•	•	•	•	•	•		•	•	•	•		•
	U200-52S						•	•	•	•	•	•	•	•	•	•	•		•	•	•	•		•
	U200-62S						•	•	•	•	•	•	•	•	•	•	•		•	•	•	•		•
	U270-62S / U270-63S U270-68S						•	•	•	•	•	•	•	•	•	•	•		•	•	•	•		•
	U200-03S / U201-03S U201-03A	•	•	•	•	•	•	•	•	•	•	•	•	•	•	•	•	•	•	•	•	•	•	•
	U200-83S / U201-83S	•	•	•	•	•	•	•	•	•	•	•	•	•	•	•	•	•	•	•	•	•	•	•
TOBY	L4006-01A																							
	L4006-51A																							
	L4106-01A																							
	L4106-51A																							
	L4206-01A																							
	L4206-51A																							
	L4906-01A																							
	L4906-50A																							
	L4906-51A																							
	L200-00S / L210-00S																							
	L200-02S / L210-02S																							
	L200-03S / L210-03S L280-03S																							
	L201-01S																							
	L201-02S																							
	L210-60S																							
	L210-62S																							

	AT command	Localization features																						
		+CMOLR	+CMOLRE	+CMTLR	+CMTLRA	+UDCONF=70	+UGAOF	+UGAOP	+UGAOS	+UGGGA	+UGGLL	+UGGSA	+UGGSV	+UGIND	+UGPRF	+UGPS	+UGRMC	+UGSRV	+UGTMR	+UGUBX	+UGVTG	+UGZDA	+ULCSEVT	+ULOC
	L200-03A / L210-03A																							
	L280-03A																							
	L280-02S																							
	L220-02S																							
	L220-62S																							
	R200-02B / R202-02B						•	•	•	•	•	•	•	•	•	•	•	•	•	•	•	•		•
LARA	R202-02B						•	•	•	•	•	•	•	•	•	•	•	•	•	•	•	•		•
	R203-02B						•	•	•	•	•	•	•	•	•	•	•	•	•	•	•	•		•
	R204-02B																							
	R211-02B						•	•	•	•	•	•	•	•	•	•	•	•	•	•	•	•		•
	R220-62B						•	•	•	•	•	•	•	•	•	•	•	•	•	•	•	•		•
	R280-02B						•	•	•	•	•	•	•	•	•	•	•	•	•	•	•	•		•
MPCI	L200-00S / L210-00S																							
	L201-01S																							
	L201-02S																							
	L210-60S																							
	L200-02S / L210-02S																							
	L200-03S / L210-03S																							
	L280-03S																							
	L220-02S																							
	L220-62S																							
	L280-02S																							

	AT command	Localization features					
		+ULOCAID	+ULOCCELL	+ULOCGNSS	+ULOCIND	+UTIME	
LEON	G100-06S		•	•			
	G100-07S / G100-08S		•	•			
SARA	G300-00S / G310-00S						
	G340-00S / G350-00S		•	•			
	G350-00X		•	•			
	G340-01S / G350-01S G350-01B		•	•			
	G340-02S / G350-02S G350-02A	•	•	•	•		
	G340-02X / G350-02X	•	•	•	•		
	G450-00C						
	U201-03A / U201-03B U201-03X	•	•	•	•		
	U201-63B	•	•	•	•		
	U201-04A / U201-04B U201-04X	•	•	•	•	•	
	U260-00S / U280-00S		•	•			
	U270-00S / U270-00X		•	•			
	U260-03S / U280-03S	•	•	•	•		
	U270-03A / U270-03S	•	•	•	•		
	U270-53S	•	•	•	•		
	U270-73S	•	•	•	•		
	U270-04B	•	•	•	•	•	
LISA	U100 / U110		•	•			
	U120 / U130		•	•			
	U200-00S						
	U200-01S / U260-01S U270-01S		•	•			
	U230-01S		•	•			
	U200-02S / U260-02S U270-02S		•	•			
	U200-52S		•	•			
	U200-62S		•	•			
	U270-62S / U270-63S U270-68S		•	•			
	U200-03S / U201-03S U201-03A	•	•	•	•		
	U200-83S / U201-83S	•	•	•	•		
TOBY	L4006-01A						
	L4006-51A						
	L4106-01A						
	L4106-51A						
	L4206-01A						
	L4206-51A						
	L4906-01A						
	L4906-50A						
	L4906-51A						
	L200-00S / L210-00S						
	L200-02S / L210-02S						
	L200-03S / L210-03S L280-03S						
	L201-01S						
	L201-02S						
	L210-60S						
	L210-62S						

	AT command	Localization features					
		+ULOCAID	+ULOCCELL	+ULOCGNSS	+ULOCIND	+UTIME	
	L200-03A / L210-03A						
	L280-03A						
	L280-02S						
	L220-02S						
	L220-62S						
	R200-02B / R202-02B	•	•	•	•		
LARA	R202-02B	•	•	•	•		
	R203-02B	•	•	•	•		
	R204-02B						
	R211-02B	•	•	•	•		
	R220-62B	•	•	•	•		
	R280-02B	•	•	•	•		
MPCI	L200-00S / L210-00S						
	L201-01S						
	L201-02S						
	L210-60S						
	L200-02S / L210-02S						
	L200-03S / L210-03S						
	L280-03S						
	L220-02S						
	L220-62S						
	L280-02S						

	AT command	Mobile equipment control and status																					
		+CALA	+CALD	+CALM	+CCLK	+CEER	+CFUN	+CIND	+CISRVCC	+CLCC	+CLVL	+CMEE	+CMER	+CMUT	+CPAS	+CPWROFF	+CRSL	+CSGT	+CTZR	+CTZU	+UCEER	+UCIND	
LEON	G100-06S	•	•	•	•	•	•	•		•	•	•	•	•	•	•	•	•	•	•			
	G100-07S / G100-08S	•	•	•	•	•	•	•		•	•	•	•	•	•	•	•	•	•	•			
SARA	G300-00S / G310-00S				•	•	•	•		•		•	•		•	•		•	•	•			
	G340-00S / G350-00S	•	•	•	•	•	•	•		•	•	•	•	•	•	•	•	•	•	•			
	G350-00X	•	•	•	•	•	•	•		•	•	•	•	•	•	•	•	•	•	•			
	G340-01S / G350-01S G350-01B	•	•	•	•	•	•	•		•	•	•	•	•	•	•	•	•	•	•			
	G340-02S / G350-02S G350-02A	•	•	•	•	•	•	•		•	•	•	•	•	•	•	•	•	•	•			
	G340-02X / G350-02X	•	•	•	•	•	•	•		•	•	•	•	•	•	•	•	•	•	•			
	G450-00C	•	•		•	•	•	•				•	•			•		•	•	•			
	U201-03A / U201-03B U201-03X	•	•	•	•	•	•	•		•	•	•	•	•	•	•	•	•	•	•		•	
	U201-63B	•	•	•	•	•	•	•		•	•	•	•	•	•	•	•	•	•	•		•	
	U201-04A / U201-04B U201-04X	•	•	•	•	•	•	•		•	•	•	•	•	•	•	•	•	•	•		•	
	U260-00S / U280-00S	•	•	•	•	•	•	•		•	•	•	•	•	•	•	•	•	•	•		•	
	U270-00S / U270-00X	•	•	•	•	•	•	•		•	•	•	•	•	•	•	•	•	•	•		•	
	U260-03S / U280-03S	•	•	•	•	•	•	•		•	•	•	•	•	•	•	•	•	•	•		•	
	U270-03A / U270-03S	•	•	•	•	•	•	•		•	•	•	•	•	•	•	•	•	•	•		•	
	U270-53S	•	•	•	•	•	•	•		•	•	•	•	•	•	•	•	•	•	•		•	
	U270-73S	•	•	•	•	•	•	•		•	•	•	•	•	•	•	•	•	•	•		•	
	U270-04B	•	•	•	•	•	•	•		•	•	•	•	•	•	•	•	•	•	•		•	
LISA	U100 / U110	•	•		•	•	•	•		•		•	•		•	•		•	•	•	•	•	
	U120 / U130	•	•	•	•	•	•	•		•	•	•	•	•	•	•	•	•	•	•	•	•	
	U200-00S	•	•		•	•	•	•		•		•	•		•	•		•	•	•	•	•	
	U200-01S / U260-01S U270-01S	•	•	•	•	•	•	•		•	•	•	•	•	•	•	•	•	•	•		•	
	U230-01S	•	•	•	•	•	•	•		•	•	•	•	•	•	•	•	•	•	•		•	
	U200-02S / U260-02S U270-02S	•	•	•	•	•	•	•		•	•	•	•	•	•	•	•	•	•	•		•	
	U200-52S	•	•	•	•	•	•	•		•	•	•	•	•	•	•	•	•	•	•		•	
	U200-62S	•	•	•	•	•	•	•		•	•	•	•	•	•	•	•	•	•	•		•	
	U270-62S / U270-63S U270-68S	•	•	•	•	•	•	•		•	•	•	•	•	•	•	•	•	•	•		•	
	U200-03S / U201-03S U201-03A	•	•	•	•	•	•	•		•	•	•	•	•	•	•	•	•	•	•		•	
	U200-83S / U201-83S	•	•	•	•	•	•	•		•	•	•	•	•	•	•	•	•	•	•		•	
TOBY	L4006-01A				•	•	•	•		•	•	•	•	•	•	•	•		•	•			
	L4006-51A				•	•	•	•		•	•	•	•	•	•	•	•		•	•			
	L4106-01A				•	•	•	•		•	•	•	•	•	•	•	•		•	•			
	L4106-51A				•	•	•	•		•	•	•	•	•	•	•	•		•	•			
	L4206-01A				•	•	•	•		•	•	•	•	•	•	•	•		•	•			
	L4206-51A				•	•	•	•		•	•	•	•	•	•	•	•		•	•			
	L4906-01A				•	•	•	•		•	•	•	•	•	•	•	•		•	•			
	L4906-50A				•	•	•	•		•	•	•	•	•	•	•	•		•	•			
	L4906-51A				•	•	•	•		•	•	•	•	•	•	•	•		•	•			
	L200-00S / L210-00S	•	•		•	•	•	•		•		•	•		•	•		•	•	•		•	
	L200-02S / L210-02S	•	•	•	•	•	•	•		•	•	•	•	•	•	•	•	•	•	•		•	
	L200-03S / L210-03S L280-03S	•	•	•	•	•	•	•		•	•	•	•	•	•	•	•	•	•	•		•	
	L201-01S	•	•		•	•	•	•		•		•	•		•	•		•	•	•		•	
	L201-02S	•	•		•	•	•	•		•		•	•		•	•		•	•	•		•	
	L210-60S	•	•		•	•	•	•		•		•	•		•	•		•	•	•		•	
	L210-62S	•	•	•	•	•	•	•		•	•	•	•	•	•	•	•	•	•	•		•	

	AT command	Mobile equipment control and status																				
		+CALA	+CALD	+CALM	+CCLK	+CEER	+CFUN	+CIND	+CISRVCC	+CLCC	+CLVL	+CMEE	+CMER	+CMUT	+CPAS	+CPWROFF	+CRSL	+CSGT	+CTZR	+CTZU	+UCEER	+UCIND	
	L200-03A / L210-03A L280-03A	•	•	•	•	•	•	•		•	•	•	•	•	•	•	•	•	•	•		•	
	L280-02S	•	•	•	•	•	•	•		•	•	•	•	•	•	•	•	•	•	•		•	
	L220-02S	•	•	•	•	•	•	•		•	•	•	•	•	•	•	•	•	•	•		•	
	L220-62S	•	•		•	•	•	•				•	•		•	•		•	•	•		•	
	R200-02B / R202-02B	•	•	•	•	•	•	•	•	•	•	•	•	•	•	•	•	•	•	•		•	
LARA	R202-02B	•	•	•	•	•	•	•	•	•	•	•	•	•	•	•	•	•	•	•		•	
	R203-02B	•	•	•	•	•	•	•		•	•	•	•	•	•	•	•	•	•	•		•	
	R204-02B	•	•		•	•	•	•				•	•		•	•		•	•	•		•	
	R211-02B	•	•	•	•	•	•	•	•	•	•	•	•	•	•	•	•	•	•	•		•	
	R220-62B	•	•		•	•	•	•				•	•		•	•		•	•	•		•	
	R280-02B	•	•	•	•	•	•	•		•	•	•	•	•	•	•	•	•	•	•		•	
MPCI	L200-00S / L210-00S	•	•		•	•	•	•		•		•	•		•	•		•	•	•		•	
	L201-01S	•	•		•	•	•	•		•		•	•		•	•		•	•	•		•	
	L201-02S	•	•		•	•	•	•		•		•	•		•	•		•	•	•		•	
	L210-60S	•	•		•	•	•	•		•		•	•		•	•		•	•	•		•	
	L200-02S / L210-02S	•	•		•	•	•	•		•		•	•		•	•		•	•	•		•	
	L200-03S / L210-03S L280-03S	•	•		•	•	•	•		•		•	•		•	•		•	•	•		•	
	L220-02S	•	•		•	•	•	•		•		•	•		•	•		•	•	•		•	
	L220-62S	•	•		•	•	•	•				•	•		•	•		•	•	•		•	
	L280-02S	•	•		•	•	•	•		•		•	•		•	•		•	•	•		•	

	AT command	Network service																						
		+CESQ	+CGED	+CNEM	+CNUM	+COPN	+COPS	+CPLS	+CPOL	+CREG	+CSQ	+CSSAC	+PACSP	+UACT	+UBANDSEL	+UCD	+UCELLINFO	+UCELLLOCK	+UCGED	+UCGOPS	+UCSDETACH	+UCSG	+UDAMCFG	+UDCONF=20
LEON	G100-06S		•		•	•	•		•	•	•				•	•				•				
	G100-07S / G100-08S		•		•	•	•		•	•	•				•	•		•		•				•
SARA	G300-00S / G310-00S		•			•	•		•	•	•				•					•				•
	G340-00S / G350-00S		•		•	•	•		•	•	•				•	•		•		•				•
	G350-00X		•		•	•	•		•	•	•				•	•		•		•				•
	G340-01S / G350-01S G350-01B		•		•	•	•		•	•	•				•	•		•		•				•
	G340-02S / G350-02S G350-02A		•		•	•	•		•	•	•				•	•		•		•				•
	G340-02X / G350-02X		•		•	•	•		•	•	•				•	•		•		•				•
	G450-00C				•	•	•		•	•	•				•									
	U201-03A / U201-03B U201-03X		•		•	•	•	•	•	•	•		•		•	•	•	•		•				•
	U201-63B		•		•	•	•	•	•	•	•		•		•	•	•	•		•				•
	U201-04A / U201-04B U201-04X		•		•	•	•	•	•	•	•		•		•	•	•	•		•				•
	U260-00S / U280-00S		•		•	•	•	•	•	•	•		•		•	•	•	•		•				•
	U270-00S / U270-00X		•		•	•	•	•	•	•	•		•		•	•	•	•		•				•
	U260-03S / U280-03S		•		•	•	•	•	•	•	•		•		•	•	•	•		•				•
	U270-03A / U270-03S		•		•	•	•	•	•	•	•		•		•	•	•	•		•				•
	U270-53S		•		•	•	•	•	•	•	•		•		•	•	•	•		•				•
	U270-73S		•		•	•	•	•	•	•	•		•		•	•	•	•		•				•
	U270-04B		•		•	•	•	•	•	•	•		•		•	•	•	•		•				•
LISA	U100 / U110		•		•	•	•	•	•	•	•		•		•	•	•			•				
	U120 / U130		•		•	•	•	•	•	•	•		•		•	•	•			•				
	U200-00S		•		•	•	•	•	•	•	•		•		•	•	•			•				
	U200-01S / U260-01S U270-01S		•		•	•	•	•	•	•	•		•		•	•	•			•				•
	U230-01S		•		•	•	•	•	•	•	•		•		•	•	•			•				•
	U200-02S / U260-02S U270-02S		•		•	•	•	•	•	•	•		•		•	•	•	•		•				•
	U200-52S		•		•	•	•	•	•	•	•		•		•	•	•	•		•				•
	U200-62S		•		•	•	•	•	•	•	•		•		•	•	•	•		•				•
	U270-62S / U270-63S U270-68S		•		•	•	•	•	•	•	•		•		•	•	•	•		•				•
	U200-03S / U201-03S U201-03A		•		•	•	•	•	•	•	•		•		•	•	•	•		•				•
	U200-83S / U201-83S		•		•	•	•	•	•	•	•		•		•	•	•	•		•				•
TOBY	L4006-01A	•		•	•	•	•	•	•	•	•	•	•	•								•	•	
	L4006-51A	•		•	•	•	•	•	•	•	•	•	•	•								•	•	
	L4106-01A	•		•	•	•	•	•	•	•	•	•	•	•								•		
	L4106-51A	•		•	•	•	•	•	•	•	•	•	•	•								•		
	L4206-01A	•		•	•	•	•	•	•	•	•	•	•	•								•		
	L4206-51A	•		•	•	•	•	•	•	•	•	•	•	•								•		
	L4906-01A	•		•	•	•	•	•	•	•	•	•	•	•								•		
	L4906-50A	•		•	•	•	•	•	•	•	•	•	•	•								•		
	L4906-51A	•		•	•	•	•	•	•	•	•	•	•	•								•		
	L200-00S / L210-00S	•			•	•	•	•	•	•	•		•		•				•	•	•			
	L200-02S / L210-02S	•			•	•	•	•	•	•	•		•		•			•	•	•	•			
	L200-03S / L210-03S L280-03S	•			•	•	•	•	•	•	•		•		•			•	•	•	•			
	L201-01S	•			•	•	•	•	•	•	•		•		•				•	•	•			
	L201-02S	•			•	•	•	•	•	•	•		•		•				•	•	•			
	L210-60S	•			•	•	•	•	•	•	•		•		•				•	•	•			
	L210-62S	•			•	•	•	•	•	•	•		•		•			•	•	•	•			

	AT command	Network service																						
		+CESQ	+CGED	+CNEM	+CNUM	+COPN	+COPS	+CPLS	+CPOL	+CREG	+CSQ	+CSSAC	+PACSP	+UACT	+UBANDSEL	+UCD	+UCELLINFO	+UCELLLOCK	+UCGED	+UCGOPS	+UCSDETACH	+UCSG	+UDAMCFG	+UDCONF=20
	L200-03A / L210-03A L280-03A	•			•	•	•	•	•	•	•		•		•			•	•	•	•			
	L280-02S	•			•	•	•	•	•	•	•		•		•			•	•	•	•			
	L220-02S	•			•	•	•	•	•	•	•		•		•			•	•	•	•			
	L220-62S	•			•	•	•	•	•	•	•		•		•			•	•	•	•			
	R200-02B / R202-02B	•	•	•	•	•	•	•	•	•	•	•	•		•		•					•		
LARA	R202-02B	•	•	•	•	•	•	•	•	•	•	•	•		•		•					•	•	
	R203-02B	•	•	•	•	•	•	•	•	•	•	•	•		•		•						•	
	R204-02B	•	•	•	•	•	•	•	•	•	•	•	•		•		•							
	R211-02B	•	•	•	•	•	•	•	•	•	•	•	•		•		•					•		•
	R220-62B	•	•		•	•	•	•	•	•	•	•	•		•		•							
	R280-02B	•	•		•	•	•	•	•	•	•	•	•		•		•					•		
MPCI	L200-00S / L210-00S	•			•	•	•	•	•	•	•		•		•				•	•	•			
	L201-01S	•			•	•	•	•	•	•	•		•		•				•	•	•			
	L201-02S	•			•	•	•	•	•	•	•		•		•				•	•	•			
	L210-60S	•			•	•	•	•	•	•	•		•		•				•	•	•			
	L200-02S / L210-02S	•			•	•	•	•	•	•	•		•		•			•	•	•	•			
	L200-03S / L210-03S L280-03S	•			•	•	•	•	•	•	•		•		•			•	•	•	•			
	L220-02S	•			•	•	•	•	•	•	•		•		•			•	•	•	•			
	L220-62S	•			•	•	•	•	•	•	•		•		•			•	•	•	•			
	L280-02S	•			•	•	•	•	•	•	•		•		•			•	•	•	•			

	AT command	Network service																						
		+UDCONF=55	+UDCONF=56	+UDCONF=57	+UDCONF=61	+UDCONF=81	+UDCONF=83	+UDOPN	+UEONS	+UFDAC	+UHOMEZR	+UHSDUPA	+UJAD	+ULTECAT	+UMNOCONF	+UMNOPLMN	+UNFM	+UNFMCONF	+UNVMMCC	+UNVMPLMN	+URAT	+URPM	+URPMCONF	+VZWAPNE
LEON	G100-06S							•	•															
	G100-07S / G100-08S							•	•															
SARA	G300-00S / G310-00S							•	•															
	G340-00S / G350-00S							•	•															
	G350-00X							•	•															
	G340-01S / G350-01S G350-01B							•	•															
	G340-02S / G350-02S G350-02A						•	•	•								•	•				•		
	G340-02X / G350-02X						•	•	•								•	•				•		
	G450-00C																							
	U201-03A / U201-03B U201-03X				•	•		•	•	•	•	•					•	•	•	•	•	•		
	U201-63B				•	•		•	•	•	•	•					•	•	•	•	•	•		
	U201-04A / U201-04B U201-04X	•		•	•	•		•	•	•	•	•					•	•	•	•	•	•		
	U260-00S / U280-00S				•	•		•	•	•	•	•									•			
	U270-00S / U270-00X				•	•		•	•	•	•	•									•			
	U260-03S / U280-03S				•	•		•	•	•	•	•					•	•	•	•	•	•		
	U270-03A / U270-03S				•	•		•	•	•	•	•					•	•	•	•	•	•		
	U270-53S				•	•		•	•	•	•	•					•	•	•	•	•	•		
	U270-73S				•	•		•	•	•	•	•					•	•	•	•	•	•		
	U270-04B	•		•	•	•		•	•	•	•	•					•	•	•	•	•	•		
LISA	U100 / U110							•	•		•	•									•			
	U120 / U130							•	•		•	•									•			
	U200-00S							•	•		•	•									•			
	U200-01S / U260-01S U270-01S							•	•		•	•									•			
	U230-01S							•	•		•	•									•			
	U200-02S / U260-02S U270-02S				•	•		•	•	•	•	•									•			
	U200-52S				•	•		•	•	•	•	•									•			
	U200-62S				•	•		•	•	•	•	•									•			
	U270-62S / U270-63S U270-68S				•	•		•	•	•	•	•									•			
	U200-03S / U201-03S U201-03A				•	•		•	•	•	•	•					•	•	•	•	•	•		
	U200-83S / U201-83S				•	•		•	•	•	•	•					•	•	•	•	•	•		
TOBY	L4006-01A		•	•		•		•		•		•	•						•	•	•	•	•	
	L4006-51A		•	•		•		•		•		•	•						•	•	•	•	•	
	L4106-01A			•		•		•		•		•	•						•	•	•	•	•	
	L4106-51A			•		•		•		•		•	•						•	•	•	•	•	
	L4206-01A			•		•		•		•		•	•						•	•	•	•	•	
	L4206-51A			•		•		•		•		•	•						•	•	•	•	•	
	L4906-01A			•		•		•		•		•	•						•	•	•	•	•	
	L4906-50A					•		•		•		•	•						•	•	•	•	•	
	L4906-51A					•		•		•		•	•						•	•	•	•	•	
	L200-00S / L210-00S				•			•	•	•		•									•			
	L200-02S / L210-02S				•	•		•	•	•		•		•							•			
	L200-03S / L210-03S L280-03S				•	•		•	•	•		•		•							•	•	•	
	L201-01S				•	•		•	•	•		•		•	•	•					•			•
	L201-02S				•	•		•	•	•		•		•	•	•					•	•	•	•
	L210-60S				•			•	•	•		•									•			
	L210-62S				•	•		•	•	•		•		•							•			

	AT command	Network service																						
		+UDCONF=55	+UDCONF=56	+UDCONF=57	+UDCONF=61	+UDCONF=81	+UDCONF=83	+UDOPN	+UEONS	+UFDAC	+UHOMEZR	+UHSDUPA	+UJAD	+ULTECAT	+UMNOCONF	+UMNOPLMN	+UNFM	+UNFMCONF	+UNVMMCC	+UNVMPLMN	+URAT	+URPM	+URPMCONF	+VZWAPNE
	L200-03A / L210-03A L280-03A				•	•		•	•	•		•		•							•	•	•	
	L280-02S				•	•		•	•	•		•		•	•	•					•			
	L220-02S				•	•		•	•	•		•		•							•			
	L220-62S					•		•	•					•							•			
	R200-02B / R202-02B					•		•	•	•	•	•			•				•	•	•			
LARA	R202-02B					•		•	•	•	•	•			•				•	•	•			
	R203-02B					•		•	•		•				•				•	•	•			
	R204-02B					•		•	•		•				•				•	•	•			•
	R211-02B					•		•	•		•								•	•	•			
	R220-62B					•		•	•		•								•	•	•			
	R280-02B					•		•	•	•	•	•							•	•	•			
MPCI	L200-00S / L210-00S				•			•	•	•		•									•			
	L201-01S				•	•		•	•	•		•		•	•	•					•			•
	L201-02S				•	•		•	•	•		•		•	•	•					•	•	•	•
	L210-60S				•			•	•	•		•									•			
	L200-02S / L210-02S				•	•		•	•	•		•		•							•			
	L200-03S / L210-03S L280-03S				•	•		•	•	•		•		•							•			
	L220-02S				•	•		•	•	•		•		•							•			
	L220-62S					•		•	•					•							•			
	L280-02S				•	•		•	•	•		•		•	•	•					•			

	AT command	Network service			
		+VZWRSRP	+VZWRSRQ	+WS46	
LEON	G100-06S				
	G100-07S / G100-08S				
SARA	G300-00S / G310-00S				
	G340-00S / G350-00S				
	G350-00X				
	G340-01S / G350-01S G350-01B				
	G340-02S / G350-02S G350-02A				
	G340-02X / G350-02X				
	G450-00C				
	U201-03A / U201-03B U201-03X			•	
	U201-63B			•	
	U201-04A / U201-04B U201-04X			•	
	U260-00S / U280-00S			•	
	U270-00S / U270-00X			•	
	U260-03S / U280-03S			•	
	U270-03A / U270-03S			•	
	U270-53S			•	
	U270-73S			•	
	U270-04B			•	
LISA	U100 / U110			•	
	U120 / U130			•	
	U200-00S			•	
	U200-01S / U260-01S U270-01S			•	
	U230-01S			•	
	U200-02S / U260-02S U270-02S			•	
	U200-52S			•	
	U200-62S			•	
	U270-62S / U270-63S U270-68S			•	
	U200-03S / U201-03S U201-03A			•	
	U200-83S / U201-83S			•	
TOBY	L4006-01A				
	L4006-51A				
	L4106-01A				
	L4106-51A				
	L4206-01A				
	L4206-51A				
	L4906-01A				
	L4906-50A				
	L4906-51A				
	L200-00S / L210-00S			•	
	L200-02S / L210-02S			•	
	L200-03S / L210-03S L280-03S			•	
	L201-01S	•	•	•	
	L201-02S	•	•	•	
	L210-60S			•	
	L210-62S			•	

	AT command	Network service			
		+VZWRSRP	+VZWRSRQ	+WS46	
	L200-03A / L210-03A L280-03A			•	
	L280-02S			•	
	L220-02S			•	
	L220-62S			•	
	R200-02B / R202-02B			•	
LARA	R202-02B			•	
	R203-02B			•	
	R204-02B	•	•	•	
	R211-02B			•	
	R220-62B			•	
	R280-02B			•	
MPCI	L200-00S / L210-00S			•	
	L201-01S	•	•	•	
	L201-02S	•	•	•	
	L210-60S			•	
	L200-02S / L210-02S			•	
	L200-03S / L210-03S L280-03S			•	
	L220-02S			•	
	L220-62S			•	
	L280-02S			•	

	AT command	Networking									
		+UBMCONF	+UDCONF=64	+UDCONF=67	+UDPDP	+UIFCONF	+UIPADDR	+UIPCONF	+UIPROUTE	+UIPTABLES	
LEON	G100-06S										
	G100-07S / G100-08S										
SARA	G300-00S / G310-00S										
	G340-00S / G350-00S										
	G350-00X										
	G340-01S / G350-01S G350-01B										
	G340-02S / G350-02S G350-02A										
	G340-02X / G350-02X										
	G450-00C										
	U201-03A / U201-03B U201-03X										
	U201-63B										
	U201-04A / U201-04B U201-04X										
	U260-00S / U280-00S										
	U270-00S / U270-00X										
	U260-03S / U280-03S										
	U270-03A / U270-03S										
	U270-53S										
	U270-73S										
	U270-04B										
LISA	U100 / U110										
	U120 / U130										
	U200-00S										
	U200-01S / U260-01S U270-01S										
	U230-01S										
	U200-02S / U260-02S U270-02S										
	U200-52S										
	U200-62S										
	U270-62S / U270-63S U270-68S										
	U200-03S / U201-03S U201-03A										
	U200-83S / U201-83S										
TOBY	L4006-01A		•			•	•	•	•	•	
	L4006-51A		•			•	•	•	•	•	
	L4106-01A		•			•	•	•	•	•	
	L4106-51A		•			•	•	•	•	•	
	L4206-01A		•			•	•	•	•	•	
	L4206-51A		•			•	•	•	•	•	
	L4906-01A		•			•	•	•	•	•	
	L4906-50A		•				•	•	•	•	
	L4906-51A		•			•	•	•	•	•	
	L200-00S / L210-00S	•		•	•		•	•	•	•	
	L200-02S / L210-02S	•		•	•		•	•	•	•	
	L200-03S / L210-03S L280-03S	•		•	•		•	•	•	•	
	L201-01S	•		•	•		•	•	•	•	
	L201-02S	•		•	•		•	•	•	•	
	L210-60S	•		•	•		•	•	•	•	
	L210-62S	•		•	•		•	•	•	•	

	AT command	Networking									
		+UBMCONF	+UDCONF=64	+UDCONF=67	+UDPDP	+UIFCONF	+UIPADDR	+UIPCONF	+UIPROUTE	+UIPTABLES	
	L200-03A / L210-03A L280-03A	•		•	•		•	•	•	•	
	L280-02S	•		•	•		•	•	•	•	
	L220-02S	•		•	•		•	•	•	•	
	L220-62S	•		•	•		•	•	•	•	
	R200-02B / R202-02B										
LARA	R202-02B										
	R203-02B										
	R204-02B										
	R211-02B										
	R220-62B										
	R280-02B										
MPCI	L200-00S / L210-00S	•		•	•		•	•	•	•	
	L201-01S	•		•	•		•	•	•	•	
	L201-02S	•		•	•		•	•	•	•	
	L210-60S	•		•	•		•	•	•	•	
	L200-02S / L210-02S	•		•	•		•	•	•	•	
	L200-03S / L210-03S L280-03S	•		•	•		•	•	•	•	
	L220-02S	•		•	•		•	•	•	•	
	L220-62S	•		•	•		•	•	•	•	
	L280-02S	•		•	•		•	•	•	•	

	AT command	Packet switched data services																						
		+CEMODE	+CEREG	+CEUS	+CGACT	+CGANS	+CGATT	+CGAUTO	+CGCLASS	+CGCMOD	+CGCONTRDP	+CGDATA	+CGDCONT	+CGDEL	+CGDSCONT	+CGEQMIN	+CGEQNEG	+CGEQOS	+CGEQOSRDP	+CGEQREQ	+CGEREP	+CGPADDR	+CGPERMACT	+CGPERMSET
LEON	G100-06S				•		•		•			•	•								•	•		
	G100-07S / G100-08S				•		•		•			•	•								•	•		
SARA	G300-00S / G310-00S				•		•		•			•	•								•	•		
	G340-00S / G350-00S				•		•		•			•	•								•	•		
	G350-00X				•		•		•			•	•								•	•		
	G340-01S / G350-01S G350-01B				•		•		•			•	•								•	•		
	G340-02S / G350-02S G350-02A				•		•		•			•	•								•	•		
	G340-02X / G350-02X				•		•		•			•	•								•	•		
	G450-00C				•		•		•			•	•								•	•		
	U201-03A / U201-03B U201-03X				•		•		•	•		•	•		•	•	•			•	•	•		
	U201-63B				•	•	•	•	•	•		•	•		•	•	•			•	•	•		
	U201-04A / U201-04B U201-04X				•		•		•	•		•	•		•	•	•			•	•	•		
	U260-00S / U280-00S				•		•		•	•		•	•		•	•	•			•	•	•		
	U270-00S / U270-00X				•		•		•	•		•	•		•	•	•			•	•	•		
	U260-03S / U280-03S				•		•		•	•		•	•		•	•	•			•	•	•		
	U270-03A / U270-03S				•		•		•	•		•	•		•	•	•			•	•	•		
	U270-53S				•		•		•	•		•	•		•	•	•			•	•	•		
	U270-73S				•		•		•	•		•	•		•	•	•			•	•	•		
	U270-04B				•		•		•	•		•	•		•	•	•			•	•	•		
LISA	U100 / U110				•		•		•	•		•	•		•	•	•			•	•	•		
	U120 / U130				•		•		•	•		•	•		•	•	•			•	•	•		
	U200-00S				•		•		•	•		•	•		•	•	•			•	•	•		
	U200-01S / U260-01S U270-01S				•		•		•	•		•	•		•	•	•			•	•	•		
	U230-01S				•		•		•	•		•	•		•	•	•			•	•	•		
	U200-02S / U260-02S U270-02S				•		•		•	•		•	•		•	•	•			•	•	•		
	U200-52S				•		•		•	•		•	•		•	•	•			•	•	•		
	U200-62S				•	•	•	•	•	•		•	•		•	•	•			•	•	•		
	U270-62S / U270-63S U270-68S				•		•		•	•		•	•		•	•	•			•	•	•	•	•
	U200-03S / U201-03S U201-03A				•		•		•	•		•	•		•	•	•			•	•	•		
	U200-83S / U201-83S				•		•		•	•		•	•		•	•	•			•	•	•		
TOBY	L4006-01A	•	•		•	•	•	•	•	•	•		•		•	•	•	•	•	•	•	•		
	L4006-51A	•	•		•	•	•	•	•	•	•		•		•	•	•	•	•	•	•	•		
	L4106-01A	•	•		•	•	•	•	•	•	•		•		•	•	•	•	•	•	•	•		
	L4106-51A	•	•		•	•	•	•	•	•	•		•		•	•	•	•	•	•	•	•		
	L4206-01A	•	•		•	•	•	•	•	•	•		•		•	•	•	•	•	•	•	•		
	L4206-51A	•	•		•	•	•	•	•	•	•		•		•	•	•	•	•	•	•	•		
	L4906-01A	•	•		•	•	•	•	•	•	•		•		•	•	•	•	•	•	•	•		
	L4906-50A	•	•		•	•	•	•	•	•	•		•		•	•	•	•	•	•	•	•		
	L4906-51A	•	•		•	•	•	•	•	•	•		•		•	•	•	•	•	•	•	•		
	L200-00S / L210-00S	•	•	•	•		•		•	•	•	•	•	•	•	•	•	•	•	•	•	•		
	L200-02S / L210-02S	•	•	•	•		•		•	•	•	•	•	•	•	•	•	•	•	•	•	•		
	L200-03S / L210-03S L280-03S	•	•	•	•		•		•	•	•	•	•	•	•	•	•	•	•	•	•	•		
	L201-01S	•	•	•	•		•		•	•	•	•	•	•	•	•	•	•	•	•	•	•		
	L201-02S	•	•	•	•		•		•	•	•	•	•	•	•	•	•	•	•	•	•	•		
	L210-60S	•	•	•	•		•		•	•	•	•	•	•	•	•	•	•	•	•	•	•		
	L210-62S	•	•	•	•		•		•	•	•	•	•	•	•	•	•	•	•	•	•	•		

	AT command	Packet switched data services																						
		+CEMODE	+CEREG	+CEUS	+CGACT	+CGANS	+CGATT	+CGAUTO	+CGCLASS	+CGCMOD	+CGCONTRDP	+CGDATA	+CGDCONT	+CGDEL	+CGDSCONT	+CGEQMIN	+CGEQNEG	+CGEQOS	+CGEQOSRDP	+CGEQREQ	+CGEREP	+CGPADDR	+CGPERMACT	+CGPERMSET
	L200-03A / L210-03A L280-03A	•	•	•	•		•		•	•	•	•	•	•	•	•	•	•	•	•	•	•		
	L280-02S	•	•	•	•		•		•	•	•	•	•	•	•	•	•	•	•	•	•	•		
	L220-02S	•	•	•	•		•		•	•	•	•	•	•	•	•	•	•	•	•	•	•		
	L220-62S	•	•	•	•		•		•	•	•	•	•	•	•	•	•	•	•	•	•	•		
	R200-02B / R202-02B	•	•		•	•	•	•	•	•	•	•	•		•	•	•	•	•	•	•	•		
LARA	R202-02B	•	•		•	•	•	•	•	•	•	•	•		•	•	•	•	•	•	•	•		
	R203-02B	•	•		•	•	•	•	•	•	•	•	•		•	•	•	•	•	•	•	•		
	R204-02B	•	•		•	•	•	•	•	•	•	•	•		•	•	•	•	•	•	•	•		
	R211-02B	•	•		•	•	•	•	•	•	•	•	•		•	•	•	•	•	•	•	•		
	R220-62B	•	•		•	•	•	•	•	•	•	•	•		•	•	•	•	•	•	•	•		
	R280-02B	•	•		•	•	•	•	•	•	•	•	•		•	•	•	•	•	•	•	•		
MPCI	L200-00S / L210-00S	•	•	•	•		•		•	•	•	•	•	•	•	•	•	•	•	•	•	•		
	L201-01S	•	•	•	•		•		•	•	•	•	•	•	•	•	•	•	•	•	•	•		
	L201-02S	•	•	•	•		•		•	•	•	•	•	•	•	•	•	•	•	•	•	•		
	L210-60S	•	•	•	•		•		•	•	•	•	•	•	•	•	•	•	•	•	•	•		
	L200-02S / L210-02S	•	•	•	•		•		•	•	•	•	•	•	•	•	•	•	•	•	•	•		
	L200-03S / L210-03S L280-03S	•	•	•	•		•		•	•	•	•	•	•	•	•	•	•	•	•	•	•		
	L220-02S	•	•	•	•		•		•	•	•	•	•	•	•	•	•	•	•	•	•	•		
	L220-62S	•	•	•	•		•		•	•	•	•	•	•	•	•	•	•	•	•	•	•		
	L280-02S	•	•	•	•		•		•	•	•	•	•	•	•	•	•	•	•	•	•	•		

	AT command	Packet switched data services																						
		+CGPERMSTATE	+CGPIAF	+CGQMIN	+CGQREQ	+CGREG	+CGSCONTRDP	+CGTFT	+CGTFTRDP	+UAUTHREQ	+UCGATT	+UCGCLASS	+UCGDFLT	+UCLASS	+UDCONF=11	+UDCONF=12	+UDCONF=66	+UDCONF=9	+UDNS	+UFGI	+UGCNTRD	+UGCNTSET	+UPCO	+UPSD
LEON	G100-06S			•	•	•								•							•	•		•
	G100-07S / G100-08S			•	•	•								•							•	•		•
SARA	G300-00S / G310-00S			•	•	•								•							•	•		
	G340-00S / G350-00S			•	•	•								•							•	•		•
	G350-00X			•	•	•								•							•	•		•
	G340-01S / G350-01S G350-01B			•	•	•								•							•	•		•
	G340-02S / G350-02S G350-02A			•	•	•				•				•							•	•		•
	G340-02X / G350-02X			•	•	•				•				•							•	•		•
	G450-00C			•	•	•								•										•
	U201-03A / U201-03B U201-03X			•	•	•		•		•		•		•	•		•				•	•		•
	U201-63B			•	•	•		•		•		•		•	•		•				•	•		•
	U201-04A / U201-04B U201-04X			•	•	•		•		•		•		•	•		•				•	•		•
	U260-00S / U280-00S			•	•	•		•				•		•			•				•	•		•
	U270-00S / U270-00X			•	•	•		•				•		•			•				•	•		•
	U260-03S / U280-03S			•	•	•		•		•		•		•			•				•	•		•
	U270-03A / U270-03S			•	•	•		•		•		•		•			•				•	•		•
	U270-53S			•	•	•		•		•		•		•			•				•	•		•
	U270-73S			•	•	•		•		•		•		•			•				•	•		•
	U270-04B			•	•	•		•		•		•		•	•		•				•	•		•
LISA	U100 / U110			•	•	•		•				•		•							•	•		•
	U120 / U130			•	•	•		•				•		•							•	•		•
	U200-00S			•	•	•		•				•		•							•	•		•
	U200-01S / U260-01S U270-01S			•	•	•		•				•		•							•	•		•
	U230-01S			•	•	•		•				•		•							•	•		•
	U200-02S / U260-02S U270-02S			•	•	•		•				•		•							•	•		•
	U200-52S			•	•	•		•				•		•							•	•		•
	U200-62S			•	•	•		•				•		•							•	•		•
	U270-62S / U270-63S U270-68S	•		•	•	•		•				•		•							•	•		•
	U200-03S / U201-03S U201-03A			•	•	•		•		•		•		•			•				•	•		•
	U200-83S / U201-83S			•	•	•		•		•		•		•			•				•	•		•
TOBY	L4006-01A			•	•	•	•	•	•	•									•	•	•	•	•	
	L4006-51A			•	•	•	•	•	•	•									•	•	•	•	•	
	L4106-01A			•	•	•	•	•	•	•									•	•	•	•	•	
	L4106-51A			•	•	•	•	•	•	•									•	•	•	•	•	
	L4206-01A			•	•	•	•	•	•	•									•	•	•	•	•	
	L4206-51A			•	•	•	•	•	•	•									•	•	•	•	•	
	L4906-01A			•	•	•	•	•	•	•									•	•	•	•	•	
	L4906-50A			•	•	•	•	•	•	•									•	•	•	•	•	
	L4906-51A			•	•	•	•	•	•	•									•	•	•	•	•	
	L200-00S / L210-00S		•	•	•	•	•	•	•	•	•	•	•	•			•	•						
	L200-02S / L210-02S		•	•	•	•	•	•	•	•	•	•	•	•			•	•						•
	L200-03S / L210-03S L280-03S		•	•	•	•	•	•	•	•	•	•	•	•			•	•		•				•
	L201-01S		•	•	•	•	•	•	•	•	•	•	•	•			•	•						•
	L201-02S		•	•	•	•	•	•	•	•	•	•	•	•			•	•						•
	L210-60S		•	•	•	•	•	•	•	•	•	•	•	•			•	•						
	L210-62S		•	•	•	•	•	•	•	•	•	•	•	•			•	•		•				•

	AT command	Packet switched data services																					
		+CGPERMSTATE	+CGPIAF	+CGQMIN	+CGQREQ	+CGREG	+CGSCONTRDP	+CGTFT	+CGTFTRDP	+UAUTHREQ	+UCGATT	+UCGCLASS	+UCGDFLT	+UCLASS	+UDCONF=11	+UDCONF=12	+UDCONF=66	+UDCONF=9	+UDNS	+UFGI	+UGCNTRD	+UGCNTSET	+UPCO	+UPSD
	L200-03A / L210-03A L280-03A		•	•	•	•	•	•	•	•	•	•	•	•			•	•		•				•
	L280-02S		•	•	•	•	•	•	•	•	•	•	•	•			•	•						•
	L220-02S		•	•	•	•	•	•	•	•	•	•	•	•			•	•						•
	L220-62S		•	•	•		•	•	•	•	•	•	•	•			•	•						•
	R200-02B / R202-02B		•	•	•	•	•	•	•	•		•		•		•			•	•	•	•	•	•
LARA	R202-02B		•	•	•	•	•	•	•	•		•		•		•			•	•	•	•	•	•
	R203-02B		•	•	•	•	•	•	•	•		•		•		•			•	•	•	•	•	•
	R204-02B		•	•	•	•	•	•	•	•		•		•					•	•	•	•	•	•
	R211-02B		•	•	•	•	•	•	•	•		•		•					•	•	•	•	•	•
	R220-62B		•	•	•	•	•	•	•	•		•		•		•			•	•	•	•	•	•
	R280-02B		•	•	•	•	•	•	•	•		•		•		•			•	•	•	•	•	•
MPCI	L200-00S / L210-00S		•	•	•	•	•	•	•	•	•	•	•	•			•	•						
	L201-01S		•	•	•	•	•	•	•	•	•	•	•	•			•	•						•
	L201-02S		•	•	•	•	•	•	•	•	•	•	•	•			•	•						•
	L210-60S		•	•	•	•	•	•	•	•	•	•	•	•			•	•						
	L200-02S / L210-02S		•	•	•	•	•	•	•	•	•	•	•	•			•	•						•
	L200-03S / L210-03S L280-03S		•	•	•	•	•	•	•	•	•	•	•	•			•	•		•				•
	L220-02S		•	•	•	•	•	•	•	•	•	•	•	•			•	•						•
	L220-62S		•	•	•		•	•	•	•	•	•	•	•			•	•						•
	L280-02S		•	•	•	•	•	•	•	•	•	•	•	•			•	•						•

	AT command	Packet switched data services						
		+UPSDA	+UPSND	+UREG	+UTGSINK	D*	H	
LEON	G100-06S	•	•			•	•	
	G100-07S / G100-08S	•	•			•	•	
SARA	G300-00S / G310-00S					•	•	
	G340-00S / G350-00S	•	•			•	•	
	G350-00X	•	•			•	•	
	G340-01S / G350-01S G350-01B	•	•			•	•	
	G340-02S / G350-02S G350-02A	•	•			•	•	
	G340-02X / G350-02X	•	•			•	•	
	G450-00C	•	•			•		
	U201-03A / U201-03B U201-03X	•	•	•		•	•	
	U201-63B	•	•	•		•	•	
	U201-04A / U201-04B U201-04X	•	•	•		•	•	
	U260-00S / U280-00S	•	•	•		•	•	
	U270-00S / U270-00X	•	•	•		•	•	
	U260-03S / U280-03S	•	•	•		•	•	
	U270-03A / U270-03S	•	•	•		•	•	
	U270-53S	•	•	•		•	•	
	U270-73S	•	•	•		•	•	
	U270-04B	•	•	•		•	•	
LISA	U100 / U110	•	•	•		•	•	
	U120 / U130	•	•	•		•	•	
	U200-00S	•	•	•		•	•	
	U200-01S / U260-01S U270-01S	•	•	•		•	•	
	U230-01S	•	•	•		•	•	
	U200-02S / U260-02S U270-02S	•	•	•		•	•	
	U200-52S	•	•	•		•	•	
	U200-62S	•	•	•		•	•	
	U270-62S / U270-63S U270-68S	•	•	•		•	•	
	U200-03S / U201-03S U201-03A	•	•	•		•	•	
	U200-83S / U201-83S	•	•	•		•	•	
TOBY	L4006-01A			•			•	
	L4006-51A			•			•	
	L4106-01A			•			•	
	L4106-51A			•			•	
	L4206-01A			•			•	
	L4206-51A			•			•	
	L4906-01A			•			•	
	L4906-50A			•			•	
	L4906-51A			•			•	
	L200-00S / L210-00S			•	•	•	•	
	L200-02S / L210-02S	•	•	•	•	•	•	
	L200-03S / L210-03S L280-03S	•	•	•	•	•	•	
	L201-01S	•	•	•	•	•	•	
	L201-02S	•	•	•	•	•	•	
	L210-60S			•	•	•	•	
	L210-62S	•	•	•	•	•	•	

	AT command	Packet switched data services						
		+UPSDA	+UPSND	+UREG	+UTGSINK	D*	H	
	L200-03A / L210-03A L280-03A	•	•	•	•	•	•	
	L280-02S	•	•	•	•	•	•	
	L220-02S	•	•	•	•	•	•	
	L220-62S	•	•	•	•	•		
	R200-02B / R202-02B	•	•	•		•	•	
LARA	R202-02B	•	•	•		•	•	
	R203-02B	•	•	•		•	•	
	R204-02B	•	•	•		•	•	
	R211-02B	•	•	•		•	•	
	R220-62B	•	•	•		•	•	
	R280-02B	•	•	•		•	•	
MPCI	L200-00S / L210-00S			•	•	•	•	
	L201-01S	•	•	•	•	•	•	
	L201-02S	•	•	•	•	•	•	
	L210-60S			•	•	•	•	
	L200-02S / L210-02S	•	•	•	•	•	•	
	L200-03S / L210-03S L280-03S	•	•	•	•	•	•	
	L220-02S	•	•	•	•	•	•	
	L220-62S	•	•	•	•	•		
	L280-02S	•	•	•	•	•	•	

	AT command	Phonebook					
		+CPBF	+CPBR	+CPBS	+CPBW	+UPBGR	
LEON	G100-06S	•	•	•	•		
	G100-07S / G100-08S	•	•	•	•		
SARA	G300-00S / G310-00S						
	G340-00S / G350-00S	•	•	•	•		
	G350-00X	•	•	•	•		
	G340-01S / G350-01S G350-01B	•	•	•	•		
	G340-02S / G350-02S G350-02A	•	•	•	•		
	G340-02X / G350-02X	•	•	•	•		
	G450-00C	•	•	•	•		
	U201-03A / U201-03B U201-03X	•	•	•	•		
	U201-63B	•	•	•	•		
	U201-04A / U201-04B U201-04X	•	•	•	•		
	U260-00S / U280-00S	•	•	•	•		
	U270-00S / U270-00X	•	•	•	•		
	U260-03S / U280-03S	•	•	•	•		
	U270-03A / U270-03S	•	•	•	•		
	U270-53S	•	•	•	•		
	U270-73S	•	•	•	•	•	
	U270-04B	•	•	•	•		
LISA	U100 / U110	•	•	•	•		
	U120 / U130	•	•	•	•		
	U200-00S	•	•	•	•		
	U200-01S / U260-01S U270-01S	•	•	•	•		
	U230-01S	•	•	•	•		
	U200-02S / U260-02S U270-02S	•	•	•	•		
	U200-52S	•	•	•	•		
	U200-62S	•	•	•	•		
	U270-62S / U270-63S U270-68S	•	•	•	•		
	U200-03S / U201-03S U201-03A	•	•	•	•		
	U200-83S / U201-83S	•	•	•	•		
TOBY	L4006-01A	•	•	•	•		
	L4006-51A	•	•	•	•		
	L4106-01A	•	•	•	•		
	L4106-51A	•	•	•	•		
	L4206-01A	•	•	•	•		
	L4206-51A	•	•	•	•		
	L4906-01A	•	•	•	•		
	L4906-50A	•	•	•	•		
	L4906-51A	•	•	•	•		
	L200-00S / L210-00S	•	•	•	•		
	L200-02S / L210-02S	•	•	•	•		
	L200-03S / L210-03S L280-03S	•	•	•	•		
	L201-01S	•	•	•	•		
	L201-02S	•	•	•	•		
	L210-60S	•	•	•	•		
	L210-62S	•	•	•	•		

	AT command	Phonebook					
		+CPBF	+CPBR	+CPBS	+CPBW	+UPBGR	
	L200-03A / L210-03A L280-03A	•	•	•	•		
	L280-02S	•	•	•	•		
	L220-02S	•	•	•	•		
	L220-62S	•	•	•	•		
	R200-02B / R202-02B	•	•	•	•		
LARA	R202-02B	•	•	•	•		
	R203-02B	•	•	•	•		
	R204-02B	•	•	•	•		
	R211-02B	•	•	•	•		
	R220-62B	•	•	•	•		
	R280-02B	•	•	•	•		
MPCI	L200-00S / L210-00S	•	•	•	•		
	L201-01S	•	•	•	•		
	L201-02S	•	•	•	•		
	L210-60S	•	•	•	•		
	L200-02S / L210-02S	•	•	•	•		
	L200-03S / L210-03S L280-03S	•	•	•	•		
	L220-02S	•	•	•	•		
	L220-62S	•	•	•	•		
	L280-02S	•	•	•	•		

	AT command	Security					
		+CLCK	+CPIN	+CPWD	+UPINCNT	+USIMLCK	
LEON	G100-06S	•	•	•	•	•	
	G100-07S / G100-08S	•	•	•	•	•	
SARA	G300-00S / G310-00S	•	•	•	•	•	
	G340-00S / G350-00S	•	•	•	•	•	
	G350-00X	•	•	•	•	•	
	G340-01S / G350-01S G350-01B	•	•	•	•	•	
	G340-02S / G350-02S G350-02A	•	•	•	•	•	
	G340-02X / G350-02X	•	•	•	•	•	
	G450-00C	•	•	•	•	•	
	U201-03A / U201-03B U201-03X	•	•	•	•	•	
	U201-63B	•	•	•	•	•	
	U201-04A / U201-04B U201-04X	•	•	•	•	•	
	U260-00S / U280-00S	•	•	•	•	•	
	U270-00S / U270-00X	•	•	•	•	•	
	U260-03S / U280-03S	•	•	•	•	•	
	U270-03A / U270-03S	•	•	•	•	•	
	U270-53S	•	•	•	•	•	
	U270-73S	•	•	•	•	•	
	U270-04B	•	•	•	•	•	
LISA	U100 / U110	•	•	•	•	•	
	U120 / U130	•	•	•	•	•	
	U200-00S	•	•	•	•	•	
	U200-01S / U260-01S U270-01S	•	•	•	•	•	
	U230-01S	•	•	•	•	•	
	U200-02S / U260-02S U270-02S	•	•	•	•	•	
	U200-52S	•	•	•	•	•	
	U200-62S	•	•	•	•	•	
	U270-62S / U270-63S U270-68S	•	•	•	•	•	
	U200-03S / U201-03S U201-03A	•	•	•	•	•	
	U200-83S / U201-83S	•	•	•	•	•	
TOBY	L4006-01A	•	•	•	•		
	L4006-51A	•	•	•	•		
	L4106-01A	•	•	•	•		
	L4106-51A	•	•	•	•		
	L4206-01A	•	•	•	•		
	L4206-51A	•	•	•	•		
	L4906-01A	•	•	•	•		
	L4906-50A	•	•	•	•		
	L4906-51A	•	•	•	•		
	L200-00S / L210-00S	•	•	•	•		
	L200-02S / L210-02S	•	•	•	•		
	L200-03S / L210-03S L280-03S	•	•	•	•		
	L201-01S	•	•	•	•		
	L201-02S	•	•	•	•		
	L210-60S	•	•	•	•		
	L210-62S	•	•	•	•		

	AT command	Security					
		+CLCK	+CPIN	+CPWD	+UPINCNT	+USIMLCK	
	L200-03A / L210-03A L280-03A	•	•	•	•		
	L280-02S	•	•	•	•		
	L220-02S	•	•	•	•		
	L220-62S	•	•	•	•		
	R200-02B / R202-02B	•	•	•	•		
LARA	R202-02B	•	•	•	•		
	R203-02B	•	•	•	•		
	R204-02B		•	•	•		
	R211-02B	•	•	•	•		
	R220-62B	•	•	•	•		
	R280-02B	•	•	•	•		
MPCI	L200-00S / L210-00S	•	•	•	•		
	L201-01S	•	•	•	•		
	L201-02S	•	•	•	•		
	L210-60S	•	•	•	•		
	L200-02S / L210-02S	•	•	•	•		
	L200-03S / L210-03S L280-03S	•	•	•	•		
	L220-02S	•	•	•	•		
	L220-62S	•	•	•	•		
	L280-02S	•	•	•	•		

	AT command	Serial interface																						
		&C	&D	&F	&K	&S	&V	&W	&Y	+CMUX	+ICF	+IFC	+IPR	+UTPB	E	O	Q	S10	S12	S2	S3	S4	S5	S6
LEON	G100-06S	•	•	•	•	•	•	•	•	•	•	•	•		•	•	•	•	•	•	•	•	•	•
	G100-07S / G100-08S	•	•	•	•	•	•	•	•	•	•	•	•		•	•	•	•	•	•	•	•	•	•
SARA	G300-00S / G310-00S	•	•	•	•	•	•	•	•	•	•	•	•	•	•	•	•	•	•	•	•	•	•	•
	G340-00S / G350-00S	•	•	•	•	•	•	•	•	•	•	•	•	•	•	•	•	•	•	•	•	•	•	•
	G350-00X	•	•	•	•	•	•	•	•	•	•	•	•	•	•	•	•	•	•	•	•	•	•	•
	G340-01S / G350-01S G350-01B	•	•	•	•	•	•	•	•	•	•	•	•	•	•	•	•	•	•	•	•	•	•	•
	G340-02S / G350-02S G350-02A	•	•	•	•	•	•	•	•	•	•	•	•	•	•	•	•	•	•	•	•	•	•	•
	G340-02X / G350-02X	•	•	•	•	•	•	•	•	•	•	•	•	•	•	•	•	•	•	•	•	•	•	•
	G450-00C	•	•	•	•	•	•	•	•	•	•	•	•		•	•	•	•	•	•	•	•	•	•
	U201-03A / U201-03B U201-03X	•	•	•	•	•	•	•	•	•	•	•	•	•	•	•	•	•	•	•	•	•	•	•
	U201-63B	•	•	•	•	•	•	•	•	•	•	•	•	•	•	•	•	•	•	•	•	•	•	•
	U201-04A / U201-04B U201-04X	•	•	•	•	•	•	•	•	•	•	•	•	•	•	•	•	•	•	•	•	•	•	•
	U260-00S / U280-00S	•	•	•	•	•	•	•	•	•	•	•	•	•	•	•	•	•	•	•	•	•	•	•
	U270-00S / U270-00X	•	•	•	•	•	•	•	•	•	•	•	•	•	•	•	•	•	•	•	•	•	•	•
	U260-03S / U280-03S	•	•	•	•	•	•	•	•	•	•	•	•	•	•	•	•	•	•	•	•	•	•	•
	U270-03A / U270-03S	•	•	•	•	•	•	•	•	•	•	•	•	•	•	•	•	•	•	•	•	•	•	•
	U270-53S	•	•	•	•	•	•	•	•	•	•	•	•	•	•	•	•	•	•	•	•	•	•	•
	U270-73S	•	•	•	•	•	•	•	•	•	•	•	•	•	•	•	•	•	•	•	•	•	•	•
	U270-04B	•	•	•	•	•	•	•	•	•	•	•	•	•	•	•	•	•	•	•	•	•	•	•
LISA	U100 / U110	•	•	•	•	•	•	•	•	•	•	•	•		•	•	•	•	•	•	•	•	•	•
	U120 / U130	•	•	•	•	•	•	•	•	•	•	•	•		•	•	•	•	•	•	•	•	•	•
	U200-00S	•	•	•	•	•	•	•	•	•	•	•	•		•	•	•	•	•	•	•	•	•	•
	U200-01S / U260-01S U270-01S	•	•	•	•	•	•	•	•	•	•	•	•		•	•	•	•	•	•	•	•	•	•
	U230-01S	•	•	•	•	•	•	•	•	•	•	•	•		•	•	•	•	•	•	•	•	•	•
	U200-02S / U260-02S U270-02S	•	•	•	•	•	•	•	•	•	•	•	•	•	•	•	•	•	•	•	•	•	•	•
	U200-52S	•	•	•	•	•	•	•	•	•	•	•	•	•	•	•	•	•	•	•	•	•	•	•
	U200-62S	•	•	•	•	•	•	•	•	•	•	•	•	•	•	•	•	•	•	•	•	•	•	•
	U270-62S / U270-63S U270-68S	•	•	•	•	•	•	•	•	•	•	•	•	•	•	•	•	•	•	•	•	•	•	•
	U200-03S / U201-03S U201-03A	•	•	•	•	•	•	•	•	•	•	•	•	•	•	•	•	•	•	•	•	•	•	•
	U200-83S / U201-83S	•	•	•	•	•	•	•	•	•	•	•	•	•	•	•	•	•	•	•	•	•	•	•
TOBY	L4006-01A						•	•							•		•							
	L4006-51A						•	•							•		•							
	L4106-01A						•	•							•		•							
	L4106-51A						•	•							•		•							
	L4206-01A						•	•							•		•							
	L4206-51A						•	•							•		•							
	L4906-01A						•	•							•		•							
	L4906-50A														•		•							
	L4906-51A						•	•							•		•							
	L200-00S / L210-00S	•	•	•			•	•	•		•	•	•		•	•	•	•	•	•	•	•	•	•
	L200-02S / L210-02S	•	•	•	•	•	•	•	•	•	•	•	•		•	•	•	•	•	•	•	•	•	•
	L200-03S / L210-03S L280-03S	•	•	•	•	•	•	•	•	•	•	•	•		•	•	•	•	•	•	•	•	•	•
	L201-01S	•	•	•	•	•	•	•	•	•	•	•	•		•	•	•	•	•	•	•	•	•	•
	L201-02S	•	•	•	•	•	•	•	•	•	•	•	•		•	•	•	•	•	•	•	•	•	•
	L210-60S	•	•	•	•	•	•	•	•	•	•	•	•		•	•	•	•	•	•	•	•	•	•
	L210-62S	•	•	•	•	•	•	•	•	•	•	•	•		•	•	•	•	•	•	•	•	•	•

	AT command	Serial interface																						
		&C	&D	&F	&K	&S	&V	&W	&Y	+CMUX	+ICF	+IFC	+IPR	+UTPB	E	O	Q	S10	S12	S2	S3	S4	S5	S6
	L200-03A / L210-03A L280-03A	•	•	•	•	•	•	•	•	•	•	•	•		•	•	•	•	•	•	•	•	•	•
	L280-02S	•	•	•	•	•	•	•	•	•	•	•	•		•	•	•	•	•	•	•	•	•	•
	L220-02S	•	•	•	•	•	•	•	•	•	•	•	•		•	•	•	•	•	•	•	•	•	•
	L220-62S	•	•	•	•	•	•	•	•	•	•	•	•		•	•	•	•	•	•	•	•	•	•
	R200-02B / R202-02B	•	•	•	•	•	•	•	•	•	•	•	•	•	•	•	•	•	•	•	•	•	•	•
LARA	R202-02B	•	•	•	•	•	•	•	•	•	•	•	•	•	•	•	•	•	•	•	•	•	•	•
	R203-02B	•	•	•	•	•	•	•	•	•	•	•	•	•	•	•	•	•	•	•	•	•	•	•
	R204-02B	•	•	•	•	•	•	•	•	•	•	•	•	•	•	•	•	•	•	•	•	•	•	•
	R211-02B	•	•	•	•	•	•	•	•	•	•	•	•	•	•	•	•	•	•	•	•	•	•	•
	R220-62B	•	•	•	•	•	•	•	•	•	•	•	•	•	•	•	•	•	•	•	•	•	•	•
	R280-02B	•	•	•	•	•	•	•	•	•	•	•	•	•	•	•	•	•	•	•	•	•	•	•
MPCI	L200-00S / L210-00S	•	•	•			•	•	•		•	•	•		•	•	•	•	•	•	•	•	•	•
	L201-01S	•	•	•	•	•	•	•	•		•	•	•		•	•	•	•	•	•	•	•	•	•
	L201-02S	•	•	•	•	•	•	•	•		•	•	•		•	•	•	•	•	•	•	•	•	•
	L210-60S	•	•	•	•	•	•	•	•		•	•	•		•	•	•	•	•	•	•	•	•	•
	L200-02S / L210-02S	•	•	•	•	•	•	•	•		•	•	•		•	•	•	•	•	•	•	•	•	•
	L200-03S / L210-03S L280-03S	•	•	•	•	•	•	•	•		•	•	•		•	•	•	•	•	•	•	•	•	•
	L220-02S	•	•	•	•	•	•	•	•		•	•	•		•	•	•	•	•	•	•	•	•	•
	L220-62S	•	•	•	•	•	•	•	•		•	•	•		•	•	•	•	•	•	•	•	•	•
	L280-02S	•	•	•	•	•	•	•	•		•	•	•		•	•	•	•	•	•	•	•	•	•

	AT command	Serial interface						
		S7	S8	V	X	Z	\Q	
LEON	G100-06S	•	•	•	•	•	•	
	G100-07S / G100-08S	•	•	•	•	•	•	
SARA	G300-00S / G310-00S	•	•	•	•	•	•	
	G340-00S / G350-00S	•	•	•	•	•	•	
	G350-00X	•	•	•	•	•	•	
	G340-01S / G350-01S G350-01B	•	•	•	•	•	•	
	G340-02S / G350-02S G350-02A	•	•	•	•	•	•	
	G340-02X / G350-02X	•	•	•	•	•	•	
	G450-00C	•	•	•		•		
	U201-03A / U201-03B U201-03X	•	•	•	•	•	•	
	U201-63B	•	•	•	•	•	•	
	U201-04A / U201-04B U201-04X	•	•	•	•	•	•	
	U260-00S / U280-00S	•	•	•	•	•	•	
	U270-00S / U270-00X	•	•	•	•	•	•	
	U260-03S / U280-03S	•	•	•	•	•	•	
	U270-03A / U270-03S	•	•	•	•	•	•	
	U270-53S	•	•	•	•	•	•	
	U270-73S	•	•	•	•	•	•	
	U270-04B	•	•	•	•	•	•	
LISA	U100 / U110	•	•	•	•	•	•	
	U120 / U130	•	•	•	•	•	•	
	U200-00S	•	•	•	•	•	•	
	U200-01S / U260-01S U270-01S	•	•	•	•	•	•	
	U230-01S	•	•	•	•	•	•	
	U200-02S / U260-02S U270-02S	•	•	•	•	•	•	
	U200-52S	•	•	•	•	•	•	
	U200-62S	•	•	•	•	•	•	
	U270-62S / U270-63S U270-68S	•	•	•	•	•	•	
	U200-03S / U201-03S U201-03A	•	•	•	•	•	•	
	U200-83S / U201-83S	•	•	•	•	•	•	
TOBY	L4006-01A			•		•		
	L4006-51A			•		•		
	L4106-01A			•		•		
	L4106-51A			•		•		
	L4206-01A			•		•		
	L4206-51A			•		•		
	L4906-01A			•		•		
	L4906-50A			•		•		
	L4906-51A			•		•		
	L200-00S / L210-00S	•	•	•		•		
	L200-02S / L210-02S	•	•	•		•	•	
	L200-03S / L210-03S L280-03S	•	•	•		•	•	
	L201-01S	•	•	•		•	•	
	L201-02S	•	•	•		•	•	
	L210-60S	•	•	•		•	•	
	L210-62S	•	•	•		•	•	

	AT command	Serial interface						
		S7	S8	V	X	Z	\Q	
	L200-03A / L210-03A L280-03A	•	•	•		•	•	
	L280-02S	•	•	•		•	•	
	L220-02S	•	•	•		•	•	
	L220-62S	•	•	•		•	•	
	R200-02B / R202-02B	•	•	•	•	•	•	
LARA	R202-02B	•	•	•	•	•	•	
	R203-02B	•	•	•	•	•	•	
	R204-02B	•	•	•	•	•	•	
	R211-02B	•	•	•	•	•	•	
	R220-62B	•	•	•	•	•	•	
	R280-02B	•	•	•	•	•	•	
MPCI	L200-00S / L210-00S	•	•	•		•		
	L201-01S	•	•	•		•	•	
	L201-02S	•	•	•		•	•	
	L210-60S	•	•	•		•	•	
	L200-02S / L210-02S	•	•	•		•	•	
	L200-03S / L210-03S L280-03S	•	•	•		•	•	
	L220-02S	•	•	•		•	•	
	L220-62S	•	•	•		•	•	
	L280-02S	•	•	•		•	•	

	AT command	Short Messages Service																						
		+CGSMS	+CMGD	+CMGF	+CMGL	+CMGR	+CMGS	+CMGW	+CMMS	+CMSS	+CNMA	+CNMI	+CPMS	+CPNER	+CRES	+CSAS	+CSCA	+CSCB	+CSDH	+CSMP	+CSMS	+UCMGL	+UCMGP	+UCMGR
LEON	G100-06S	•	•	•	•	•	•	•		•	•	•	•		•	•	•	•	•	•	•	•		•
	G100-07S / G100-08S	•	•	•	•	•	•	•		•	•	•	•		•	•	•	•	•	•	•	•		•
SARA	G300-00S / G310-00S	•	•	•	•	•	•	•		•	•	•	•		•	•	•	•	•	•	•	•		•
	G340-00S / G350-00S	•	•	•	•	•	•	•		•	•	•	•		•	•	•	•	•	•	•	•		•
	G350-00X	•	•	•	•	•	•	•		•	•	•	•		•	•	•	•	•	•	•	•		•
	G340-01S / G350-01S G350-01B	•	•	•	•	•	•	•		•	•	•	•		•	•	•	•	•	•	•	•		•
	G340-02S / G350-02S G350-02A	•	•	•	•	•	•	•		•	•	•	•		•	•	•	•	•	•	•	•		•
	G340-02X / G350-02X	•	•	•	•	•	•	•		•	•	•	•		•	•	•	•	•	•	•	•		•
	G450-00C	•	•	•	•	•	•	•		•	•	•	•		•	•	•	•	•	•	•			
	U201-03A / U201-03B U201-03X	•	•	•	•	•	•	•	•	•	•	•	•		•	•	•	•	•	•	•		•	
	U201-63B	•	•	•	•	•	•	•	•	•	•	•	•		•	•	•	•	•	•	•		•	
	U201-04A / U201-04B U201-04X	•	•	•	•	•	•	•	•	•	•	•	•		•	•	•	•	•	•	•		•	
	U260-00S / U280-00S	•	•	•	•	•	•	•	•	•	•	•	•		•	•	•	•	•	•	•		•	
	U270-00S / U270-00X	•	•	•	•	•	•	•	•	•	•	•	•		•	•	•	•	•	•	•		•	
	U260-03S / U280-03S	•	•	•	•	•	•	•	•	•	•	•	•		•	•	•	•	•	•	•		•	
	U270-03A / U270-03S	•	•	•	•	•	•	•	•	•	•	•	•		•	•	•	•	•	•	•		•	
	U270-53S	•	•	•	•	•	•	•	•	•	•	•	•		•	•	•	•	•	•	•		•	
	U270-73S	•	•	•	•	•	•	•	•	•	•	•	•		•	•	•	•	•	•	•		•	
	U270-04B	•	•	•	•	•	•	•	•	•	•	•	•		•	•	•	•	•	•	•		•	
LISA	U100 / U110	•	•	•	•	•	•	•	•	•	•	•	•		•	•	•	•	•	•	•			
	U120 / U130	•	•	•	•	•	•	•	•	•	•	•	•		•	•	•	•	•	•	•			
	U200-00S	•	•	•	•	•	•	•	•	•	•	•	•		•	•	•	•	•	•	•			
	U200-01S / U260-01S U270-01S	•	•	•	•	•	•	•	•	•	•	•	•		•	•	•	•	•	•	•		•	
	U230-01S	•	•	•	•	•	•	•	•	•	•	•	•		•	•	•	•	•	•	•		•	
	U200-02S / U260-02S U270-02S	•	•	•	•	•	•	•	•	•	•	•	•		•	•	•	•	•	•	•		•	
	U200-52S	•	•	•	•	•	•	•	•	•	•	•	•		•	•	•	•	•	•	•		•	
	U200-62S	•	•	•	•	•	•	•	•	•	•	•	•		•	•	•	•	•	•	•		•	
	U270-62S / U270-63S U270-68S	•	•	•	•	•	•	•	•	•	•	•	•		•	•	•	•	•	•	•		•	
	U200-03S / U201-03S U201-03A	•	•	•	•	•	•	•	•	•	•	•	•		•	•	•	•	•	•	•		•	
	U200-83S / U201-83S	•	•	•	•	•	•	•	•	•	•	•	•		•	•	•	•	•	•	•		•	
TOBY	L4006-01A	•	•	•	•	•	•	•	•	•	•	•	•		•	•	•	•	•	•	•			
	L4006-51A	•	•	•	•	•	•	•	•	•	•	•	•		•	•	•	•	•	•	•			
	L4106-01A	•	•	•	•	•	•	•	•	•	•	•	•		•	•	•	•	•	•	•			
	L4106-51A	•	•	•	•	•	•	•	•	•	•	•	•		•	•	•	•	•	•	•			
	L4206-01A	•	•	•	•	•	•	•	•	•	•	•	•		•	•	•	•	•	•	•			
	L4206-51A	•	•	•	•	•	•	•	•	•	•	•	•		•	•	•	•	•	•	•			
	L4906-01A	•	•	•	•	•	•	•	•	•	•	•	•		•	•	•	•	•	•	•			
	L4906-50A	•	•	•	•	•	•	•	•	•	•	•	•		•	•	•	•	•	•	•			
	L4906-51A	•	•	•	•	•	•	•	•	•	•	•	•		•	•	•	•	•	•	•			
	L200-00S / L210-00S	•	•	•	•	•	•	•		•	•	•	•	•	•	•	•	•	•	•	•			
	L200-02S / L210-02S	•	•	•	•	•	•	•	•	•	•	•	•	•	•	•	•	•	•	•	•		•	
	L200-03S / L210-03S L280-03S	•	•	•	•	•	•	•	•	•	•	•	•	•	•	•	•	•	•	•	•		•	
	L201-01S	•	•	•	•	•	•	•		•	•	•	•	•	•	•	•	•	•	•	•			
	L201-02S	•	•	•	•	•	•	•		•	•	•	•	•	•	•	•	•	•	•	•			
	L210-60S	•	•	•	•	•	•	•		•	•	•	•	•	•	•	•	•	•	•	•			
	L210-62S	•	•	•	•	•	•	•	•	•	•	•	•	•	•	•	•	•	•	•	•		•	

	AT command	Short Messages Service																						
		+CGSMS	+CMGD	+CMGF	+CMGL	+CMGR	+CMGS	+CMGW	+CMMS	+CMSS	+CNMA	+CNMI	+CPMS	+CPNER	+CRES	+CSAS	+CSCA	+CSCB	+CSDH	+CSMP	+CSMS	+UCMGL	+UCMGP	+UCMGR
	L200-03A / L210-03A L280-03A	•	•	•	•	•	•	•	•	•	•	•	•	•	•	•	•	•	•	•	•		•	
	L280-02S	•	•	•	•	•	•	•	•	•	•	•	•	•	•	•	•	•	•	•	•		•	
	L220-02S	•	•	•	•	•	•	•	•	•	•	•	•	•	•	•	•	•	•	•	•		•	
	L220-62S	•	•	•	•	•	•	•	•	•	•	•	•	•	•	•	•	•	•	•	•		•	
	R200-02B / R202-02B	•	•	•	•	•	•	•	•	•	•	•	•		•	•	•	•	•	•	•		•	
LARA	R202-02B	•	•	•	•	•	•	•	•	•	•	•	•		•	•	•	•	•	•	•		•	
	R203-02B	•	•	•	•	•	•	•	•	•	•	•	•		•	•	•	•	•	•	•		•	
	R204-02B	•	•	•	•	•	•	•	•	•	•	•	•		•	•	•	•	•	•	•		•	
	R211-02B	•	•	•	•	•	•	•	•	•	•	•	•		•	•	•	•	•	•	•		•	
	R220-62B	•	•	•	•	•	•	•	•	•	•	•	•		•	•	•	•	•	•	•		•	
	R280-02B	•	•	•	•	•	•	•	•	•	•	•	•		•	•	•	•	•	•	•		•	
MPCI	L200-00S / L210-00S	•	•	•	•	•	•	•		•	•	•	•	•	•	•	•	•	•	•	•			
	L201-01S	•	•	•	•	•	•	•		•	•	•	•	•	•	•	•	•	•	•	•			
	L201-02S	•	•	•	•	•	•	•		•	•	•	•	•	•	•	•	•	•	•	•			
	L210-60S	•	•	•	•	•	•	•		•	•	•	•	•	•	•	•	•	•	•	•			
	L200-02S / L210-02S	•	•	•	•	•	•	•	•	•	•	•	•	•	•	•	•	•	•	•	•		•	
	L200-03S / L210-03S L280-03S	•	•	•	•	•	•	•	•	•	•	•	•	•	•	•	•	•	•	•	•		•	
	L220-02S	•	•	•	•	•	•	•	•	•	•	•	•	•	•	•	•	•	•	•	•		•	
	L220-62S	•	•	•	•	•	•	•	•	•	•	•	•	•	•	•	•	•	•	•	•		•	
	L280-02S	•	•	•	•	•	•	•	•	•	•	•	•	•	•	•	•	•	•	•	•		•	

	AT command	Short Messages Service								
		+UCMGS	+UCMGW	+UDCONF=13	+UDCONF=82	+UETWCFG	+UETWNTFYSTART	+UETWNTFYSTOP	+UMWI	
LEON	G100-06S	•	•							
	G100-07S / G100-08S	•	•							
SARA	G300-00S / G310-00S	•	•							
	G340-00S / G350-00S	•	•							
	G350-00X	•	•							
	G340-01S / G350-01S G350-01B	•	•							
	G340-02S / G350-02S G350-02A	•	•							
	G340-02X / G350-02X	•	•							
	G450-00C									
	U201-03A / U201-03B U201-03X				•				•	
	U201-63B				•	•	•	•	•	
	U201-04A / U201-04B U201-04X			•	•				•	
	U260-00S / U280-00S								•	
	U270-00S / U270-00X								•	
	U260-03S / U280-03S				•				•	
	U270-03A / U270-03S				•				•	
	U270-53S				•				•	
	U270-73S				•				•	
	U270-04B			•	•				•	
LISA	U100 / U110									
	U120 / U130									
	U200-00S									
	U200-01S / U260-01S U270-01S								•	
	U230-01S								•	
	U200-02S / U260-02S U270-02S								•	
	U200-52S								•	
	U200-62S								•	
	U270-62S / U270-63S U270-68S								•	
	U200-03S / U201-03S U201-03A				•				•	
	U200-83S / U201-83S				•				•	
TOBY	L4006-01A								•	
	L4006-51A								•	
	L4106-01A									
	L4106-51A									
	L4206-01A									
	L4206-51A									
	L4906-01A									
	L4906-50A									
	L4906-51A									
	L200-00S / L210-00S									
	L200-02S / L210-02S								•	
	L200-03S / L210-03S L280-03S								•	
	L201-01S									
	L201-02S									
	L210-60S									
	L210-62S								•	

	AT command	Short Messages Service								
		+UCMGS	+UCMGW	+UDCONF=13	+UDCONF=82	+UETWCFG	+UETWNTFYSTART	+UETWNTFYSTOP	+UMWI	
	L200-03A / L210-03A L280-03A								•	
	L280-02S								•	
	L220-02S								•	
	L220-62S								•	
	R200-02B / R202-02B								•	
LARA	R202-02B								•	
	R203-02B								•	
	R204-02B								•	
	R211-02B								•	
	R220-62B					•	•	•	•	
	R280-02B								•	
MPCI	L200-00S / L210-00S									
	L201-01S									
	L201-02S									
	L210-60S									
	L200-02S / L210-02S								•	
	L200-03S / L210-03S L280-03S								•	
	L220-02S								•	
	L220-62S								•	
	L280-02S								•	

	AT command	SIM functionalities																						
		+CCHC	+CCHO	+CGLA	+CLAN	+CRLA	+CRSM	+CSIM	+CUAD	+SATD	+SATE	+SATR	+STKCTRLIND	+STKENV	+STKPRO	+STKPROF	+STKTR	+UBIP	+UBIPAPN	+UCATENV	+UCATPROF	+UCATPROI	+UCATPRON	+UCATTR
LEON	G100-06S						•	•						•	•	•	•							
	G100-07S / G100-08S						•	•						•	•	•	•							
SARA	G300-00S / G310-00S						•	•						•	•	•	•							
	G340-00S / G350-00S						•	•						•	•	•	•							
	G350-00X						•	•						•	•	•	•							
	G340-01S / G350-01S G350-01B						•	•						•	•	•	•							
	G340-02S / G350-02S G350-02A	•	•	•		•	•	•	•					•	•	•	•	•						
	G340-02X / G350-02X	•	•	•		•	•	•	•					•	•	•	•	•						
	G450-00C						•	•																
	U201-03A / U201-03B U201-03X	•	•	•	•	•	•	•	•	•	•	•	•	•	•	•	•	•	•					
	U201-63B	•	•	•	•	•	•	•	•	•	•	•	•	•	•	•	•	•	•					
	U201-04A / U201-04B U201-04X	•	•	•	•	•	•	•	•	•	•	•	•	•	•	•	•	•	•					
	U260-00S / U280-00S				•		•	•		•	•	•	•	•	•	•	•							
	U270-00S / U270-00X				•		•	•		•	•	•	•	•	•	•	•							
	U260-03S / U280-03S	•	•	•	•	•	•	•	•	•	•	•	•	•	•	•	•	•						
	U270-03A / U270-03S	•	•	•	•	•	•	•	•	•	•	•	•	•	•	•	•	•						
	U270-53S	•	•	•	•	•	•	•	•	•	•	•	•	•	•	•	•	•						
	U270-73S	•	•	•	•	•	•	•	•	•	•	•	•	•	•	•	•	•						
	U270-04B	•	•	•	•	•	•	•	•	•	•	•	•	•	•	•	•	•	•					
LISA	U100 / U110				•		•	•		•	•	•	•	•	•	•	•							
	U120 / U130				•		•	•		•	•	•	•	•	•	•	•							
	U200-00S				•		•	•		•	•	•	•	•	•	•	•							
	U200-01S / U260-01S U270-01S				•		•	•		•	•	•	•	•	•	•	•							
	U230-01S				•		•	•		•	•	•	•	•	•	•	•							
	U200-02S / U260-02S U270-02S				•		•	•		•	•	•	•	•	•	•	•							
	U200-52S				•		•	•		•	•	•	•	•	•	•	•							
	U200-62S				•		•	•		•	•	•	•	•	•	•	•							
	U270-62S / U270-63S U270-68S				•		•	•		•	•	•	•	•	•	•	•							
	U200-03S / U201-03S U201-03A	•	•	•	•	•	•	•	•	•	•	•	•	•	•	•	•	•						
	U200-83S / U201-83S	•	•	•	•	•	•	•	•	•	•	•	•	•	•	•	•	•						
TOBY	L4006-01A	•	•	•	•	•	•	•	•					•	•	•	•	•	•					
	L4006-51A	•	•	•	•	•	•	•	•					•	•	•	•	•	•					
	L4106-01A	•	•	•	•	•	•	•	•					•	•	•	•	•	•					
	L4106-51A	•	•	•	•	•	•	•	•					•	•	•	•	•	•					
	L4206-01A	•	•	•	•	•	•	•	•					•	•	•	•	•	•					
	L4206-51A	•	•	•	•	•	•	•	•					•	•	•	•	•	•					
	L4906-01A	•	•	•	•	•	•	•	•					•	•	•	•	•	•					
	L4906-50A	•	•	•	•	•	•	•	•					•	•	•	•	•	•					
	L4906-51A	•	•	•	•	•	•	•	•					•	•	•	•	•	•					
	L200-00S / L210-00S	•	•	•	•	•	•	•	•											•	•	•	•	•
	L200-02S / L210-02S	•	•	•	•	•	•	•	•									•		•	•	•	•	•
	L200-03S / L210-03S L280-03S	•	•	•	•	•	•	•	•									•		•	•	•	•	•
	L201-01S	•	•	•	•	•	•	•	•											•	•	•	•	•
	L201-02S	•	•	•	•	•	•	•	•									•		•	•	•	•	•
	L210-60S	•	•	•	•	•	•	•	•											•	•	•	•	•
	L210-62S	•	•	•	•	•	•	•	•									•		•	•	•	•	•

	AT command	SIM functionalities																						
		+CCHC	+CCHO	+CGLA	+CLAN	+CRLA	+CRSM	+CSIM	+CUAD	+SATD	+SATE	+SATR	+STKCTRLIND	+STKENV	+STKPRO	+STKPROF	+STKTR	+UBIP	+UBIPAPN	+UCATENV	+UCATPROF	+UCATPROI	+UCATPRON	+UCATTR
	L200-03A / L210-03A L280-03A	•	•	•	•	•	•	•	•									•		•	•	•	•	•
	L280-02S	•	•	•	•	•	•	•	•									•		•	•	•	•	•
	L220-02S	•	•	•	•	•	•	•	•									•		•	•	•	•	•
	L220-62S	•	•	•	•	•	•	•	•									•		•	•	•	•	•
	R200-02B / R202-02B	•	•	•	•	•	•	•	•	•	•	•	•	•	•	•	•	•	•					
LARA	R202-02B	•	•	•	•	•	•	•	•	•	•	•	•	•	•	•	•	•	•					
	R203-02B	•	•	•	•	•	•	•	•	•	•	•	•	•	•	•	•	•	•					
	R204-02B	•	•	•	•	•	•	•	•	•	•	•	•	•	•	•	•	•	•					
	R211-02B	•	•	•	•	•	•	•	•	•	•	•	•	•	•	•	•	•	•					
	R220-62B	•	•	•	•	•	•	•	•	•	•	•	•	•	•	•	•	•	•					
	R280-02B	•	•	•	•	•	•	•	•	•	•	•	•	•	•	•	•	•	•					
MPCI	L200-00S / L210-00S	•	•	•	•	•	•	•	•											•	•	•	•	•
	L201-01S	•	•	•	•	•	•	•	•											•	•	•	•	•
	L201-02S	•	•	•	•	•	•	•	•									•		•	•	•	•	•
	L210-60S	•	•	•	•	•	•	•	•											•	•	•	•	•
	L200-02S / L210-02S	•	•	•	•	•	•	•	•									•		•	•	•	•	•
	L200-03S / L210-03S L280-03S	•	•	•	•	•	•	•	•									•		•	•	•	•	•
	L220-02S	•	•	•	•	•	•	•	•									•		•	•	•	•	•
	L220-62S	•	•	•	•	•	•	•	•									•		•	•	•	•	•
	L280-02S	•	•	•	•	•	•	•	•									•		•	•	•	•	•

	AT command	SIM functionalities													
		+UCSP	+UDCONF=50	+UDCONF=54	+UDTMF	+URCATCC	+URCATE	+URCATR	+USAPIND	+USAPMODE	+USIMATR	+USIMSTAT	+UUICC	+XSIMSWITCH	
LEON	G100-06S														
	G100-07S / G100-08S														
SARA	G300-00S / G310-00S														
	G340-00S / G350-00S														
	G350-00X														
	G340-01S / G350-01S G350-01B														
	G340-02S / G350-02S G350-02A														
	G340-02X / G350-02X														
	G450-00C														
	U201-03A / U201-03B U201-03X	•	•	•	•				•	•	•	•	•		
	U201-63B	•	•	•	•				•	•	•	•	•		
	U201-04A / U201-04B U201-04X	•	•	•	•				•	•	•	•	•		
	U260-00S / U280-00S	•	•		•				•	•			•		
	U270-00S / U270-00X	•	•		•				•	•			•		
	U260-03S / U280-03S	•	•		•				•	•		•	•		
	U270-03A / U270-03S	•	•		•				•	•		•	•		
	U270-53S	•	•	•	•				•	•	•	•	•		
	U270-73S	•	•		•				•	•		•	•		
	U270-04B	•	•	•	•				•	•	•	•	•		
LISA	U100 / U110	•											•		
	U120 / U130	•			•								•		
	U200-00S	•											•		
	U200-01S / U260-01S U270-01S	•	•		•				•	•			•		
	U230-01S	•	•		•				•	•			•		
	U200-02S / U260-02S U270-02S	•	•		•				•	•			•		
	U200-52S	•	•		•				•	•			•		
	U200-62S	•	•		•				•	•			•		
	U270-62S / U270-63S U270-68S	•	•		•				•	•			•		
	U200-03S / U201-03S U201-03A	•	•		•				•	•		•	•		
	U200-83S / U201-83S	•	•		•				•	•		•	•		
TOBY	L4006-01A	•	•		•								•	•	
	L4006-51A	•	•		•								•	•	
	L4106-01A	•	•		•								•	•	
	L4106-51A	•	•		•								•	•	
	L4206-01A	•	•		•								•	•	
	L4206-51A	•	•		•								•	•	
	L4906-01A	•	•		•								•	•	
	L4906-50A	•	•		•								•	•	
	L4906-51A	•	•		•								•	•	
	L200-00S / L210-00S	•				•	•	•					•		
	L200-02S / L210-02S	•	•		•	•	•	•					•		
	L200-03S / L210-03S L280-03S	•	•		•	•	•	•	•	•			•		
	L201-01S	•				•	•	•					•		
	L201-02S	•	•			•	•	•					•		
	L210-60S	•				•	•	•					•		
	L210-62S	•	•		•	•	•	•					•		

	AT command	SIM functionalities													
		+UCSP	+UDCONF=50	+UDCONF=54	+UDTMF	+URCATCC	+URCATE	+URCATR	+USAPIND	+USAPMODE	+USIMATR	+USIMSTAT	+UUICC	+XSIMSWITCH	
	L200-03A / L210-03A L280-03A	•	•		•	•	•	•	•	•			•		
	L280-02S	•	•		•	•	•	•					•		
	L220-02S	•	•		•	•	•	•					•		
	L220-62S	•	•			•	•	•					•		
	R200-02B / R202-02B	•	•		•						•	•	•		
LARA	R202-02B	•	•		•						•	•	•		
	R203-02B	•	•		•						•	•	•		
	R204-02B	•	•								•	•	•		
	R211-02B	•	•		•						•	•	•		
	R220-62B	•	•								•	•	•		
	R280-02B	•	•		•						•	•	•		
MPCI	L200-00S / L210-00S	•				•	•	•					•		
	L201-01S	•				•	•	•					•		
	L201-02S	•	•			•	•	•					•		
	L210-60S	•				•	•	•					•		
	L200-02S / L210-02S	•	•		•	•	•	•					•		
	L200-03S / L210-03S L280-03S	•	•		•	•	•	•	•	•			•		
	L220-02S	•	•		•	•	•	•					•		
	L220-62S	•	•			•	•	•					•		
	L280-02S	•	•		•	•	•	•					•		

	AT command	Supplementary services																					
		+CAAP	+CACM	+CAEMLPP	+CAMM	+CAOC	+CCFC	+CCUG	+CCWA	+CCWE	+CHLD	+CLIP	+CLIR	+CNAP	+COLP	+COLR	+CPPS	+CPUC	+CSSN	+CTFR	+CUSD	+CUUS1	
LEON	G100-06S		•		•	•	•	•	•	•	•	•	•	•	•	•		•	•	•	•	•	
	G100-07S / G100-08S		•		•	•	•	•	•	•	•	•	•	•	•	•		•	•	•	•	•	
SARA	G300-00S / G310-00S		•		•	•	•	•	•	•	•	•	•	•	•	•		•	•	•	•	•	
	G340-00S / G350-00S		•		•	•	•	•	•	•	•	•	•	•	•	•		•	•	•	•	•	
	G350-00X		•		•	•	•	•	•	•	•	•	•	•	•	•		•	•	•	•	•	
	G340-01S / G350-01S G350-01B		•		•	•	•	•	•	•	•	•	•	•	•	•		•	•	•	•	•	
	G340-02S / G350-02S G350-02A		•		•	•	•	•	•	•	•	•	•	•	•	•		•	•	•	•	•	
	G340-02X / G350-02X		•		•	•	•	•	•	•	•	•	•	•	•	•		•	•	•	•	•	
	G450-00C																				•		
	U201-03A / U201-03B U201-03X	•	•	•	•	•	•	•	•	•	•	•	•	•	•	•	•	•	•	•	•		
	U201-63B	•	•	•	•	•	•	•	•	•	•	•	•	•	•	•	•	•	•	•	•		
	U201-04A / U201-04B U201-04X	•	•	•	•	•	•	•	•	•	•	•	•	•	•	•	•	•	•	•	•		
	U260-00S / U280-00S		•		•	•	•	•	•	•	•	•	•	•	•	•		•	•	•	•		
	U270-00S / U270-00X		•		•	•	•	•	•	•	•	•	•	•	•	•		•	•	•	•		
	U260-03S / U280-03S	•	•	•	•	•	•	•	•	•	•	•	•	•	•	•	•	•	•	•	•		
	U270-03A / U270-03S	•	•	•	•	•	•	•	•	•	•	•	•	•	•	•	•	•	•	•	•		
	U270-53S	•	•	•	•	•	•	•	•	•	•	•	•	•	•	•	•	•	•	•	•		
	U270-73S	•	•	•	•	•	•	•	•	•	•	•	•	•	•	•	•	•	•	•	•		
	U270-04B	•	•	•	•	•	•	•	•	•	•	•	•	•	•	•	•	•	•	•	•		
LISA	U100 / U110		•		•	•	•	•	•	•	•	•	•	•	•	•		•	•	•	•		
	U120 / U130		•		•	•	•	•	•	•	•	•	•	•	•	•		•	•	•	•		
	U200-00S		•		•	•	•	•	•	•	•	•	•	•	•	•		•	•	•	•		
	U200-01S / U260-01S U270-01S		•		•	•	•	•	•	•	•	•	•	•	•	•		•	•	•	•		
	U230-01S		•		•	•	•	•	•	•	•	•	•	•	•	•		•	•	•	•		
	U200-02S / U260-02S U270-02S		•		•	•	•	•	•	•	•	•	•	•	•	•		•	•	•	•		
	U200-52S		•		•	•	•	•	•	•	•	•	•	•	•	•		•	•	•	•		
	U200-62S		•		•	•	•	•	•	•	•	•	•	•	•	•		•	•	•	•		
	U270-62S / U270-63S U270-68S		•		•	•	•	•	•	•	•	•	•	•	•	•		•	•	•	•		
	U200-03S / U201-03S U201-03A	•	•	•	•	•	•	•	•	•	•	•	•	•	•	•	•	•	•	•	•		
	U200-83S / U201-83S	•	•	•	•	•	•	•	•	•	•	•	•	•	•	•	•	•	•	•	•		
TOBY	L4006-01A		•		•	•	•	•	•	•	•	•	•	•	•	•		•	•	•	•		
	L4006-51A		•		•	•	•	•	•	•	•	•	•	•	•	•		•	•	•	•		
	L4106-01A		•		•	•	•	•	•	•	•	•	•	•	•	•		•	•	•	•		
	L4106-51A		•		•	•	•	•	•	•	•	•	•	•	•	•		•	•	•	•		
	L4206-01A		•		•	•	•	•	•	•	•	•	•	•	•	•		•	•	•	•		
	L4206-51A		•		•	•	•	•	•	•	•	•	•	•	•	•		•	•	•	•		
	L4906-01A		•		•	•	•	•	•	•	•	•	•	•	•	•		•	•	•	•		
	L4906-50A		•		•	•	•	•	•	•	•	•	•	•	•	•		•	•	•	•		
	L4906-51A		•		•	•	•	•	•	•	•	•	•	•	•	•		•	•	•	•		
	L200-00S / L210-00S		•		•	•	•	•	•		•	•	•	•	•	•		•	•	•	•	•	
	L200-02S / L210-02S		•		•	•	•	•	•	•	•	•	•	•	•	•		•	•	•	•	•	
	L200-03S / L210-03S L280-03S		•		•	•	•	•	•	•	•	•	•	•	•	•		•	•	•	•	•	
	L201-01S		•		•	•	•	•	•		•	•	•	•	•	•		•	•	•	•	•	
	L201-02S		•		•	•	•	•	•		•	•	•	•	•	•		•	•	•	•	•	
	L210-60S		•		•		•	•	•		•	•	•	•	•	•		•	•	•	•	•	
	L210-62S		•		•		•	•		•	•	•	•	•	•	•		•	•	•	•	•	

	AT command	Supplementary services																					
		+CAAP	+CACM	+CAEMLPP	+CAMM	+CAOC	+CCFC	+CCUG	+CCWA	+CCWE	+CHLD	+CLIP	+CLIR	+CNAP	+COLP	+COLR	+CPPS	+CPUC	+CSSN	+CTFR	+CUSD	+CUUS1	
	L200-03A / L210-03A L280-03A		•		•	•	•	•	•	•	•	•	•	•	•	•		•	•	•	•	•	
	L280-02S		•		•	•	•	•	•	•	•	•	•	•	•	•		•	•	•	•	•	
	L220-02S		•		•	•	•	•	•	•	•	•	•	•	•	•		•	•	•	•	•	
	L220-62S					•	•	•	•			•	•	•	•	•		•	•		•	•	
	R200-02B / R202-02B		•		•	•	•	•	•	•	•	•	•	•	•	•		•	•	•	•		
LARA	R202-02B		•		•	•	•	•	•	•	•	•	•	•	•	•		•	•	•	•		
	R203-02B		•		•	•	•	•	•	•	•	•	•	•	•	•		•	•	•	•		
	R204-02B		•		•			•						•	•	•		•	•	•	•		
	R211-02B		•		•	•	•	•	•	•	•	•	•	•	•	•		•	•	•	•		
	R220-62B		•		•			•						•	•	•		•	•	•	•		
	R280-02B		•		•	•	•	•	•	•	•	•	•	•	•	•		•	•	•	•		
MPCI	L200-00S / L210-00S		•		•	•	•	•	•		•	•	•	•	•	•		•	•	•	•	•	
	L201-01S		•		•	•	•	•	•		•	•	•	•	•	•		•	•	•	•	•	
	L201-02S		•		•	•	•	•	•		•	•	•	•	•	•		•	•	•	•	•	
	L210-60S		•		•	•	•	•	•		•	•	•	•	•	•		•	•	•	•	•	
	L200-02S / L210-02S		•		•	•	•	•	•	•	•	•	•	•	•	•		•	•	•	•	•	
	L200-03S / L210-03S L280-03S		•		•	•	•	•	•	•	•	•	•	•	•	•		•	•	•	•	•	
	L220-02S		•		•	•	•	•	•	•	•	•	•	•	•	•		•	•	•	•	•	
	L220-62S					•	•	•	•			•	•	•	•	•		•	•		•	•	
	L280-02S		•		•	•	•	•	•	•	•	•	•	•	•	•		•	•	•	•	•	

	AT command	System features																						
		*KTF*OPENING	+UADC	+UANT	+UANTR	+UCEDATA	+UCTS	+UDATACHANNEL	+UDCONF=0	+UDCONF=40	+UDCONF=60	+UFACTORY	+UFWINSTALL	+UFWSINSTALL	+UFWUPD	+ULGASP	+UOMADM	+UOMADMALERT	+UOMADMREP	+UOMASTAT	+UPSV	+URING	+URXDIV	+USIO
LEON	G100-06S		•		•				•						•						•			
	G100-07S / G100-08S		•		•				•						•						•			
SARA	G300-00S / G310-00S								•						•						•			
	G340-00S / G350-00S				•				•						•						•			
	G350-00X				•				•						•						•			
	G340-01S / G350-01S G350-01B				•				•						•						•			
	G340-02S / G350-02S G350-02A				•		•		•			•			•						•			•
	G340-02X / G350-02X				•		•		•			•			•						•			•
	G450-00C				•		•		•			•			•						•			
	U201-03A / U201-03B U201-03X				•	•	•	•		•	•	•			•		•	•	•	•	•	•		
	U201-63B				•	•	•	•		•	•	•			•		•	•	•	•	•	•		
	U201-04A / U201-04B U201-04X				•	•	•	•		•	•	•	•		•	•	•	•	•	•	•	•		•
	U260-00S / U280-00S				•			•		•	•				•						•	•		
	U270-00S / U270-00X				•			•		•	•				•						•	•		
	U260-03S / U280-03S				•	•	•	•		•	•	•			•						•	•		
	U270-03A / U270-03S				•	•	•	•		•	•	•			•						•	•		
	U270-53S	•			•	•	•	•		•	•	•			•						•	•		
	U270-73S				•	•	•	•		•	•	•			•						•	•		
	U270-04B				•	•	•	•		•	•	•			•	•					•	•		•
LISA	U100 / U110				•			•							•						•			
	U120 / U130				•			•							•						•			
	U200-00S				•			•							•						•			
	U200-01S / U260-01S U270-01S				•			•		•	•				•						•			
	U230-01S				•			•		•	•				•						•		•	
	U200-02S / U260-02S U270-02S				•			•		•	•				•						•	•		
	U200-52S				•			•		•	•				•						•	•		
	U200-62S				•			•		•	•				•						•	•		
	U270-62S / U270-63S U270-68S				•			•		•	•				•						•	•		
	U200-03S / U201-03S U201-03A				•	•	•	•		•	•	•			•						•	•		
	U200-83S / U201-83S				•	•	•	•		•	•	•	•		•						•	•		
TOBY	L4006-01A			•	•					•		•	•				•	•	•	•	•	•	•	
	L4006-51A			•	•					•		•	•				•	•	•	•	•	•	•	
	L4106-01A			•	•					•		•	•								•	•	•	
	L4106-51A			•	•					•		•	•								•	•	•	
	L4206-01A			•	•					•		•	•								•	•	•	
	L4206-51A			•	•					•		•	•								•	•	•	
	L4906-01A			•	•					•		•	•								•	•	•	
	L4906-50A			•	•					•		•	•									•	•	
	L4906-51A			•	•					•		•	•								•	•	•	
	L200-00S / L210-00S										•				•						•			
	L200-02S / L210-02S			•	•					•	•	•	•		•						•	•	•	
	L200-03S / L210-03S L280-03S			•	•					•	•	•	•	•	•						•	•	•	
	L201-01S			•							•		•		•						•			
	L201-02S			•	•						•		•	•	•					•	•		•	
	L210-60S										•				•						•			
	L210-62S			•	•					•	•	•	•		•						•	•	•	

	AT command	System features																						
		*KTF*OPENING	+UADC	+UANT	+UANTR	+UCEDATA	+UCTS	+UDATACHANNEL	+UDCONF=0	+UDCONF=40	+UDCONF=60	+UFACTORY	+UFWINSTALL	+UFWSINSTALL	+UFWUPD	+ULGASP	+UOMADM	+UOMADMALERT	+UOMADMREP	+UOMASTAT	+UPSV	+URING	+URXDIV	+USIO
	L200-03A / L210-03A L280-03A			•	•					•	•	•	•	•	•						•	•	•	
	L280-02S			•	•					•	•	•	•		•						•	•	•	
	L220-02S			•	•						•	•	•		•						•	•	•	
	L220-62S			•	•						•	•	•		•						•	•	•	
	R200-02B / R202-02B			•	•		•	•		•		•	•		•		•	•	•	•	•	•	•	
LARA	R202-02B			•	•		•	•				•	•		•		•	•	•	•	•	•	•	
	R203-02B			•	•		•	•				•	•		•		•	•	•	•	•	•		
	R204-02B			•	•		•	•				•	•		•				•	•	•	•		
	R211-02B			•	•		•	•		•		•	•		•						•	•		
	R220-62B			•	•		•	•				•	•		•						•	•		
	R280-02B			•	•		•	•				•	•		•						•	•	•	
MPCI	L200-00S / L210-00S										•				•						•			
	L201-01S			•							•		•		•						•			
	L201-02S			•							•		•	•	•					•	•		•	
	L210-60S										•				•						•			
	L200-02S / L210-02S			•						•	•	•	•		•						•	•	•	
	L200-03S / L210-03S L280-03S			•						•	•	•	•		•						•	•	•	
	L220-02S			•							•	•	•		•						•	•	•	
	L220-62S			•							•	•	•		•						•	•	•	
	L280-02S			•						•	•	•	•		•						•	•	•	

	AT command	System features									
		+USTS	+UTEMP	+UTEST	+UUSBCONF	KTCFUN	KTDEVSTAT	KTUBXCONF	KTUCALLREJ	KTUUMTSENV	
LEON	G100-06S	•		•							
	G100-07S / G100-08S	•		•							
SARA	G300-00S / G310-00S			•							
	G340-00S / G350-00S	•		•							
	G350-00X	•		•							
	G340-01S / G350-01S G350-01B	•		•							
	G340-02S / G350-02S G350-02A	•		•							
	G340-02X / G350-02X	•		•							
	G450-00C										
	U201-03A / U201-03B U201-03X	•		•	•						
	U201-63B	•		•	•						
	U201-04A / U201-04B U201-04X	•		•	•						
	U260-00S / U280-00S	•		•							
	U270-00S / U270-00X	•		•							
	U260-03S / U280-03S	•		•	•						
	U270-03A / U270-03S	•		•	•						
	U270-53S	•		•	•	•	•	•	•	•	
	U270-73S	•		•	•						
	U270-04B	•		•	•						
LISA	U100 / U110	•		•							
	U120 / U130	•		•							
	U200-00S	•		•							
	U200-01S / U260-01S U270-01S	•		•							
	U230-01S	•		•							
	U200-02S / U260-02S U270-02S	•		•							
	U200-52S	•		•							
	U200-62S	•		•							
	U270-62S / U270-63S U270-68S	•		•							
	U200-03S / U201-03S U201-03A	•		•	•						
	U200-83S / U201-83S	•		•	•						
TOBY	L4006-01A	•	•	•							
	L4006-51A	•	•	•							
	L4106-01A	•	•	•							
	L4106-51A	•	•	•							
	L4206-01A	•	•	•							
	L4206-51A	•	•	•							
	L4906-01A	•	•	•							
	L4906-50A			•							
	L4906-51A	•	•	•							
	L200-00S / L210-00S			•	•						
	L200-02S / L210-02S	•		•	•						
	L200-03S / L210-03S L280-03S	•		•	•						
	L201-01S			•	•						
	L201-02S	•		•	•						
	L210-60S			•	•						
	L210-62S	•		•	•						

	AT command	System features									
		+USTS	+UTEMP	+UTEST	+UUSBCONF	KTCFUN	KTDEVSTAT	KTUBXCONF	KTUCALLREJ	KTUUMTSENV	
	L200-03A / L210-03A L280-03A	•		•	•						
	L280-02S	•		•	•						
	L220-02S	•		•	•						
	L220-62S	•		•	•						
	R200-02B / R202-02B	•		•							
LARA	R202-02B	•		•							
	R203-02B	•		•							
	R204-02B	•		•							
	R211-02B	•		•							
	R220-62B	•		•							
	R280-02B	•		•							
MPCI	L200-00S / L210-00S			•	•						
	L201-01S			•	•						
	L201-02S	•		•	•						
	L210-60S			•	•						
	L200-02S / L210-02S	•		•	•						
	L200-03S / L210-03S L280-03S	•		•	•						
	L220-02S	•		•	•						
	L220-62S	•		•	•						
	L280-02S	•		•	•						

	AT command	Internet protocol transport layer																						
		+UDCONF=1	+UDCONF=10	+UDCONF=2	+UDCONF=3	+UDCONF=5	+UDCONF=6	+UDCONF=7	+UDCONF=8	+UFRW	+UIPCHGN	+USOAO	+USOCL	+USOCO	+USOCR	+USOCTL	+USODL	+USOER	+USOGO	+USOLI	+USORD	+USORF	+USOSEC	+USOSO
LEON	G100-06S	•								•			•	•	•	•	•	•	•	•	•	•		•
	G100-07S / G100-08S	•								•			•	•	•	•	•	•	•	•	•	•		•
SARA	G300-00S / G310-00S																							
	G340-00S / G350-00S	•				•	•	•	•		•	•	•	•	•	•	•	•	•	•	•	•		•
	G350-00X	•				•	•	•	•		•	•	•	•	•	•	•	•	•	•	•	•		•
	G340-01S / G350-01S G350-01B	•				•	•	•	•		•	•	•	•	•	•	•	•	•	•	•	•		•
	G340-02S / G350-02S G350-02A	•				•	•	•	•		•	•	•	•	•	•	•	•	•	•	•	•	•	•
	G340-02X / G350-02X	•				•	•	•	•		•	•	•	•	•	•	•	•	•	•	•	•	•	•
	G450-00C	•				•	•	•	•		•	•	•	•	•	•	•	•	•	•	•	•	•	•
	U201-03A / U201-03B U201-03X	•	•			•	•	•	•		•	•	•	•	•	•	•	•	•	•	•	•	•	•
	U201-63B	•	•			•	•	•	•		•	•	•	•	•	•	•	•	•	•	•	•	•	•
	U201-04A / U201-04B U201-04X	•	•			•	•	•	•		•	•	•	•	•	•	•	•	•	•	•	•	•	•
	U260-00S / U280-00S	•				•	•	•	•		•	•	•	•	•	•	•	•	•	•	•	•		•
	U270-00S / U270-00X	•				•	•	•	•		•	•	•	•	•	•	•	•	•	•	•	•		•
	U260-03S / U280-03S	•	•			•	•	•	•		•	•	•	•	•	•	•	•	•	•	•	•	•	•
	U270-03A / U270-03S	•	•			•	•	•	•		•	•	•	•	•	•	•	•	•	•	•	•	•	•
	U270-53S	•	•			•	•	•	•		•	•	•	•	•	•	•	•	•	•	•	•	•	•
	U270-73S	•	•			•	•	•	•		•	•	•	•	•	•	•	•	•	•	•	•	•	•
	U270-04B	•	•			•	•	•	•		•	•	•	•	•	•	•	•	•	•	•	•	•	•
LISA	U100 / U110	•		•	•								•	•	•	•	•	•	•	•	•	•		•
	U120 / U130	•		•	•								•	•	•	•	•	•	•	•	•	•		•
	U200-00S	•		•	•								•	•	•	•	•	•	•	•	•	•		•
	U200-01S / U260-01S U270-01S	•		•	•								•	•	•	•	•	•	•	•	•	•		•
	U230-01S	•		•	•								•	•	•	•	•	•	•	•	•	•		•
	U200-02S / U260-02S U270-02S	•				•	•	•	•		•	•	•	•	•	•	•	•	•	•	•	•		•
	U200-52S	•				•	•	•	•		•	•	•	•	•	•	•	•	•	•	•	•		•
	U200-62S	•				•	•	•	•		•	•	•	•	•	•	•	•	•	•	•	•		•
	U270-62S / U270-63S U270-68S	•									•	•	•	•	•	•	•	•	•	•	•	•		•
	U200-03S / U201-03S U201-03A	•	•			•	•	•	•		•	•	•	•	•	•	•	•	•	•	•	•	•	•
	U200-83S / U201-83S	•	•			•	•	•	•		•	•	•	•	•	•	•	•	•	•	•	•	•	•
TOBY	L4006-01A																							
	L4006-51A																							
	L4106-01A																							
	L4106-51A																							
	L4206-01A																							
	L4206-51A																							
	L4906-01A																							
	L4906-50A																							
	L4906-51A																							
	L200-00S / L210-00S																							
	L200-02S / L210-02S	•				•	•	•	•		•		•	•	•	•	•	•	•	•	•	•	•	•
	L200-03S / L210-03S L280-03S	•				•	•	•	•		•		•	•	•	•	•	•	•	•	•	•	•	•
	L201-01S	•				•	•	•	•				•	•	•	•	•	•	•	•	•	•		•
	L201-02S	•				•	•	•	•				•	•	•	•	•	•	•	•	•	•	•	•
	L210-60S																							
	L210-62S	•				•	•	•	•		•		•	•	•	•	•	•	•	•	•	•	•	•

	AT command	Internet protocol transport layer																						
		+UDCONF=1	+UDCONF=10	+UDCONF=2	+UDCONF=3	+UDCONF=5	+UDCONF=6	+UDCONF=7	+UDCONF=8	+UFRW	+UIPCHGN	+USOAO	+USOCL	+USOCO	+USOCR	+USOCTL	+USODL	+USOER	+USOGO	+USOLI	+USORD	+USORF	+USOSEC	+USOSO
	L200-03A / L210-03A L280-03A	•				•	•	•	•		•		•	•	•	•	•	•	•	•	•	•	•	•
	L280-02S	•				•	•	•	•		•		•	•	•	•	•	•	•	•	•	•	•	•
	L220-02S	•				•	•	•	•		•		•	•	•	•	•	•	•	•	•	•	•	•
	L220-62S	•				•	•	•	•		•		•	•	•	•	•	•	•	•	•	•	•	•
	R200-02B / R202-02B	•	•			•	•	•	•		•		•	•	•	•	•	•	•	•	•	•	•	•
LARA	R202-02B	•	•			•	•	•	•		•		•	•	•	•	•	•	•	•	•	•	•	•
	R203-02B	•	•			•	•	•	•		•		•	•	•	•	•	•	•	•	•	•	•	•
	R204-02B	•	•			•	•	•	•		•		•	•	•	•	•	•	•	•	•	•	•	•
	R211-02B	•	•			•	•	•	•		•		•	•	•	•	•	•	•	•	•	•	•	•
	R220-62B	•	•			•	•	•	•		•		•	•	•	•	•	•	•	•	•	•	•	•
	R280-02B	•	•			•	•	•	•		•		•	•	•	•	•	•	•	•	•	•	•	•
MPCI	L200-00S / L210-00S																							
	L201-01S	•				•	•	•	•				•	•	•	•	•	•	•	•	•	•		•
	L201-02S	•				•	•	•	•				•	•	•	•	•	•	•	•	•	•	•	•
	L210-60S																							
	L200-02S / L210-02S	•				•	•	•	•		•		•	•	•	•	•	•	•	•	•	•	•	•
	L200-03S / L210-03S L280-03S	•				•	•	•	•		•		•	•	•	•	•	•	•	•	•	•	•	•
	L220-02S	•				•	•	•	•		•		•	•	•	•	•	•	•	•	•	•	•	•
	L220-62S	•				•	•	•	•		•		•	•	•	•	•	•	•	•	•	•	•	•
	L280-02S	•				•	•	•	•		•		•	•	•	•	•	•	•	•	•	•	•	•

	AT command	Internet protocol transport layer		
		+USOST	+USOWR	
LEON	G100-06S	•	•	
	G100-07S / G100-08S	•	•	
SARA	G300-00S / G310-00S			
	G340-00S / G350-00S	•	•	
	G350-00X	•	•	
	G340-01S / G350-01S G350-01B	•	•	
	G340-02S / G350-02S G350-02A	•	•	
	G340-02X / G350-02X	•	•	
	G450-00C	•	•	
	U201-03A / U201-03B U201-03X	•	•	
	U201-63B	•	•	
	U201-04A / U201-04B U201-04X	•	•	
	U260-00S / U280-00S	•	•	
	U270-00S / U270-00X	•	•	
	U260-03S / U280-03S	•	•	
	U270-03A / U270-03S	•	•	
	U270-53S	•	•	
	U270-73S	•	•	
	U270-04B	•	•	
LISA	U100 / U110	•	•	
	U120 / U130	•	•	
	U200-00S	•	•	
	U200-01S / U260-01S U270-01S	•	•	
	U230-01S	•	•	
	U200-02S / U260-02S U270-02S	•	•	
	U200-52S	•	•	
	U200-62S	•	•	
	U270-62S / U270-63S U270-68S	•	•	
	U200-03S / U201-03S U201-03A	•	•	
	U200-83S / U201-83S	•	•	
TOBY	L4006-01A			
	L4006-51A			
	L4106-01A			
	L4106-51A			
	L4206-01A			
	L4206-51A			
	L4906-01A			
	L4906-50A			
	L4906-51A			
	L200-00S / L210-00S			
	L200-02S / L210-02S	•	•	
	L200-03S / L210-03S L280-03S	•	•	
	L201-01S	•	•	
	L201-02S	•	•	
	L210-60S			
	L210-62S	•	•	

	AT command	Internet protocol transport layer		
		+USOST	+USOWR	
	L200-03A / L210-03A L280-03A	•	•	
	L280-02S	•	•	
	L220-02S	•	•	
	L220-62S	•	•	
	R200-02B / R202-02B	•	•	
LARA	R202-02B	•	•	
	R203-02B	•	•	
	R204-02B	•	•	
	R211-02B	•	•	
	R220-62B	•	•	
	R280-02B	•	•	
MPCI	L200-00S / L210-00S			
	L201-01S	•	•	
	L201-02S	•	•	
	L210-60S			
	L200-02S / L210-02S	•	•	
	L200-03S / L210-03S L280-03S	•	•	
	L220-02S	•	•	
	L220-62S	•	•	
	L280-02S	•	•	

	AT command	Wi-Fi interface															
		+UWAPCFG	+UWAPIPCFG	+UWAPMACADDR	+UWAPSTALIST	+UWCFG	+UWFWRESET	+UWMP	+UWREGBLOCK	+UWSCAN	+UWSTACFG	+UWSTACSQ	+UWSTAIPCFG	+UWTEST	+UWWEBUI	+UWWEBUIFTP	
LEON	G100-06S																
	G100-07S / G100-08S																
SARA	G300-00S / G310-00S																
	G340-00S / G350-00S																
	G350-00X																
	G340-01S / G350-01S G350-01B																
	G340-02S / G350-02S G350-02A																
	G340-02X / G350-02X																
	G450-00C																
	U201-03A / U201-03B U201-03X																
	U201-63B																
	U201-04A / U201-04B U201-04X																
	U260-00S / U280-00S																
	U270-00S / U270-00X																
	U260-03S / U280-03S																
	U270-03A / U270-03S																
	U270-53S																
	U270-73S																
	U270-04B																
LISA	U100 / U110																
	U120 / U130																
	U200-00S																
	U200-01S / U260-01S U270-01S																
	U230-01S																
	U200-02S / U260-02S U270-02S																
	U200-52S																
	U200-62S																
	U270-62S / U270-63S U270-68S																
	U200-03S / U201-03S U201-03A																
	U200-83S / U201-83S																
TOBY	L4006-01A																
	L4006-51A																
	L4106-01A																
	L4106-51A																
	L4206-01A																
	L4206-51A																
	L4906-01A																
	L4906-50A																
	L4906-51A																
	L200-00S / L210-00S																
	L200-02S / L210-02S	•	•	•	•	•	•	•	•	•	•		•	•	•	•	
	L200-03S / L210-03S L280-03S	•	•	•	•	•	•	•	•	•	•	•	•	•	•	•	
	L201-01S																
	L201-02S	•	•	•	•	•	•	•	•	•	•	•	•	•	•	•	
	L210-60S																
	L210-62S	•	•	•	•	•	•	•	•	•	•		•	•	•	•	

	AT command	Wi-Fi interface															
		+UWAPCFG	+UWAPIPCFG	+UWAPMACADDR	+UWAPSTALIST	+UWCFG	+UWFWRESET	+UWMP	+UWREGBLOCK	+UWSCAN	+UWSTACFG	+UWSTACSQ	+UWSTAIPCFG	+UWTEST	+UWWEBUI	+UWWEBUIFTP	
	L200-03A / L210-03A L280-03A	•	•	•	•	•	•	•	•	•	•	•	•	•	•	•	
	L280-02S	•	•	•	•	•	•	•	•	•	•		•	•	•	•	
	L220-02S	•	•	•	•	•	•	•	•	•	•		•	•	•	•	
	L220-62S	•	•	•	•	•	•	•	•	•	•		•	•	•	•	
	R200-02B / R202-02B																
LARA	R202-02B																
	R203-02B																
	R204-02B																
	R211-02B																
	R220-62B																
	R280-02B																
MPCI	L200-00S / L210-00S																
	L201-01S																
	L201-02S																
	L210-60S																
	L200-02S / L210-02S																
	L200-03S / L210-03S L280-03S																
	L220-02S																
	L220-62S																
	L280-02S																

B.1 Parameters stored in profiles

The parameter settings of some commands can be stored in the profiles available in the memory module.

☞ TOBY-L2 / MPCI-L2 / LARA-R2 / TOBY-R2 / SARA-U2 / LISA-U2 / LISA-U1 / SARA-G4 / SARA-G3 / LEON-G1
To store, partially display, activate and de-activate these profiles, see the AT&W, AT&V, AT&Y commands description. Not all the parameter setting are displayed through AT&V command.

☞ TOBY-L4
To store, display, reset to default value the available profile, see the AT&W, AT&V, and ATZ commands description.

☞ Some AT commands have a unique configuration for all the AT interfaces while for other AT commands it is possible to set a different configuration for each AT interface: the "AT interface configuration sharing" column in the next table provides this information.
Some AT command interfaces have a dynamic activation, which means they are not statically activated at boot time (MUX AT channel is activated when the MUX protocol is established, USB AT channel is activated if/when the USB cable is plugged-in, deactivated when it is removed). Since the activation reloads the AT command profile from NVM for the activated interface, the shared "AT interface configurations" could be overwritten. It is suggested to reconfigure them at the requested value if an AT command interface is dynamically activated.

☞ SARA-U201-04A / SARA-U201-04B / SARA-U201-04X / SARA-U270-04B
Due to AUX UART interface's limitations, at boot time, the parameter setting of AT+IFC command stored in the profile might be not applicable. In this case, the factory-programmed value is applied.
The same behaviour is experienced in case the ATZ or AT&F commands are issued by the DTE on the AUX UART interface.

☞ SARA-G340-02S / SARA-G340-02X / SARA-G350-02A / SARA-G350-02S / SARA-G350-02X
Due to AUX UART interface's limitations, at boot time, the parameter setting of AT+IPR, AT+ICF and AT+IFC commands stored in the profile might be not applicable. In this case, the factory-programmed value is applied.
The same behaviour is experienced in case the ATZ or AT&F commands are issued by the DTE on the AUX UART interface.

The following table lists the AT commands which setting can be stored in the profiles with their parameters as well as the factory-programmed values.

AT command	Description	AT interface configuration sharing	Factory-programmed value / Remarks
&C	DCD status	No	1 (DCD enabled)
&D	DTR status	No	1 (DTR enabled)
&K	Flow control status	No	3 (RTS/CTS DTE flow control enabled)
&S	DSR override	No	1 (DSR line set to ON in data mode and to OFF in command mode)
+CBST	Bearer service type	Yes	• LARA-R2 / TOBY-R2 / SARA-U2 / LISA-U2 / LISA-U1 - 71 (Speed: 9600 b/s (V110 or X.31 flag stuffing)), 0 (data circuit asynchronous), 1 (non-transparent) • SARA-G3 / LEON-G1 - 7 (Speed: 9600 b/s (V.32)), 0 (data circuit asynchronous), 1 (non-transparent)
+CMGF	Preferred message format	Yes	0 (format of messages in PDU mode) ☞ TOBY-L201 / MPCI-L201 The default value is 1 (text mode) if the module is configured in Verizon mode (+UMNOCONF=3).
+CNMI	New message indication	Yes	• 1 (discard indication and reject new received message URCs when MT-DTE link is reserved) • 0 (no SMS-DELIVER indications are routed to the TE) • 0 (no CBM indications to the DTE) • 0 (no SMS-STATUS-REPORTs are routed to the DTE) • 0 (MT buffer of URCs defined within this command is flushed to the DTE when >mode< 1...3 is entered)
+COPS	Operator selection	Yes	• 0 (autoregistration enabled) • 0 (operator expressed in long alphanumeric format)

AT command	Description	AT interface configuration sharing	Factory-programmed value / Remarks
			• FFFF (undefined PLMN to register when COPS=1)
+CR	Reporting control status	No	0 (reporting disabled)
+CRC	Cellular result code status	No	0 (extended format disabled)
+CRLP	Radio Link protocol settings	Yes	• LARA-R2 / TOBY-R2 / SARA-U2 / LISA-U200-03S / LISA-U200-83S / LISA-U201 / SARA-G340-01S / SARA-G340-02S / SARA-G340-02X / SARA-G350-01B / SARA-G350-01S / SARA-G350-02A / SARA-G350-02S / SARA-G350-02X / LEON-G100-07S / LEON-G100-08S o 61 (IWF to MT window size) o 61 (MT to IWF window size) o 48 (acknowledgement timer) o 7 (retransmission attempts) • LISA-U200-00S / LISA-U200-01S / LISA-U200-02S / LISA-U200-52S / LISA-U200-62S / LISA-U230 / LISA-U260 / LISA-U270 / LISA-U1 / SARA-G300 / SARA-G310 / SARA-G340-00S / SARA-G350-00S / SARA-G350-00X / LEON-G100-06S o 61 (IWF to MT window size) o 61 (MT to IWF window size) o 48 (acknowledgement timer) o 6 (retransmission attempts)
+CSNS	Single numbering scheme	Yes	0 (voice bearer service, during a mobile terminated single numbering scheme call) • LISA-U200-00S / LISA-U200-01S / LISA-U200-02S / LISA-U200-52S / LISA-U200-62S / LISA-U230 / LISA-U260 / LISA-U270 / LISA-U1 / SARA-G300 / SARA-G310 / SARA-G340-00S / SARA-G340-01S / SARA-G350-00S / SARA-G350-00X / SARA-G350-01B / SARA-G350-01S / LEON-G1 - The command setting is not stored in the profile
+ICF	DTE-DCE character framing	No	• TOBY-L2 / LARA-R2 / TOBY-R2 / SARA-U2 / LISA-U2 / LISA-U1 / SARA-G4 - 3, 1 (framing format: 8 data 1 stop, no parity) • SARA-G3 / LEON-G1 - 0, 0 (framing format autodetected)
+IFC	DTE-DCE local flow control	No	2 (<DCE_by_DTE> on circuit 106 (CTS)), 2 (<DTE_by_DCE> on circuit 105 (RTS))
+IPR	Baud rate	No	• TOBY-L2 / LARA-R2 / TOBY-R2 / SARA-U2 / LISA-U2 / SARA-G4 / SARA-G3 / LEON-G1 - 0 (autobauding enabled) • LISA-U200-00S / LISA-U1 - 115200 (115200 b/s)
+UAPT	Audio parameters tuning	Yes	See TOBY-L2 Audio Application Note [118] for the factory-programmed values stored in the profiles.
+UDBF	Downlink biquad digital filters	Yes	• LARA-R2 / TOBY-R2 / SARA-U2 / LISA-U2 / LISA-U1 / SARA-G3 - For all paths, all the filters are set to: 0 (a1), 0 (b1), 0 (a2), 0 (b2), 32767 (a0) • LEON-G1 o Path 0: - Filter1: 0 (a1), 0 (b1), 0 (a2), 0 (b2), 32767 (a0) - Filter2: 0 (a1), 0 (b1), 0 (a2), 0 (b2), 32767 (a0) o Path 1: - Filter1: -29322 (a1), -29141 (b1), 29322 (a2), 26240 (b2), 29322 (a0) - Filter2: 29322 (a1), 29141 (b1), 29322 (a2), 26240 (b2), 29322 (a0) o Path 3: - Filter1: 0 (a1), 0 (b1), 0 (a2), 0 (b2), 32767 (a0) - Filter2: 0 (a1), 0 (b1), 0 (a2), 0 (b2), 32767 (a0) o Path 4:

AT command	Description	AT interface configuration sharing	Factory-programmed value / Remarks
			- Filter1: 0 (a1), 0 (b1), 0 (a2), 0 (b2), 32767 (a0) - Filter2: 0 (a1), 0 (b1), 0 (a2), 0 (b2), 32767 (a0)
+UHFP	Hands-free parameters	Yes	• LARA-R2 / TOBY-R2 o Paths 0, 1, 2, 3: 0x0124 (HF_algorithm_init), NA (HF_Algorithm_Restart), NA (Step_Width), NA (LMS_Length), NA (LMS_Offset), NA (Block_Length), NA (RXTX_Relation), 0 (Add_Atten), 0 (Min_Atten), 480 (Max_Atten), 8192 (NR_sw_2), 7500 (NR_u_fak_0), 7500 (NR_u_fak), 2 (EC_block_length), 100 (EC_nr_coeff_real), 100 (EC_nr_coeff_complex1), 100 (EC_nr_coeff_complex2), 60 (EC_nr_coeff_complex3), 60 (EC_nr_coeff_complex4), 60 (EC_nr_coeff_complex5) o Path 4: 0x0524 (HF_algorithm_init), NA (HF_Algorithm_Restart), NA (Step_Width), NA (LMS_Length), NA (LMS_Offset), NA (Block_Length), NA (RXTX_Relation), 15 (Add_Atten), 0 (Min_Atten), 191 (Max_Atten), 6000 (NR_sw_2), 4500 (NR_u_fak_0), 5000 (NR_u_fak), 1 (EC_block_length), 100 (EC_nr_coeff_real), 100 (EC_nr_coeff_complex1), 100 (EC_nr_coeff_complex2), 100 (EC_nr_coeff_complex3), 100 (EC_nr_coeff_complex4), 100 (EC_nr_coeff_complex5) • SARA-U2 / LISA-U2 o All the paths are set to: 0x0124 (HF_algorithm_init), NA (HF_Algorithm_Restart), NA (Step_Width), NA (LMS_Length), NA (LMS_Offset), NA (Block_Length), NA (RXTX_Relation), 0 (Add_Atten), 0 (Min_Atten), 500 (Max_Atten), 8192 (NR_sw_2), 7500 (NR_u_fak_0), 7500 (NR_u_fak), 2 (EC_block_length), 100 (EC_nr_coeff_real), 100 (EC_nr_coeff_complex1), 100 (EC_nr_coeff_complex2), 60 (EC_nr_coeff_complex3), 60 (EC_nr_coeff_complex4), 60 (EC_nr_coeff_complex5) • SARA-U201-04A / SARA-U201-04B / SARA-U201-04X / SARA-U270-04B o Paths 0, 1, 2, 3: 0x0124 (HF_algorithm_init), NA (HF_Algorithm_Restart), NA (Step_Width), NA (LMS_Length), NA (LMS_Offset), NA (Block_Length), NA (RXTX_Relation), 0 (Add_Atten), 0 (Min_Atten), 500 (Max_Atten), 8192 (NR_sw_2), 7500 (NR_u_fak_0), 7500 (NR_u_fak), 2 (EC_block_length), 100 (EC_nr_coeff_real), 100 (EC_nr_coeff_complex1), 100 (EC_nr_coeff_complex2), 60 (EC_nr_coeff_complex3), 60 (EC_nr_coeff_complex4), 60 (EC_nr_coeff_complex5) o Paths 4: 0x0524 (HF_algorithm_init), NA (HF_Algorithm_Restart), NA (Step_Width), NA (LMS_Length), NA (LMS_Offset), NA (Block_Length), NA (RXTX_Relation), 15 (Add_Atten), 0 (Min_Atten), 191 (Max_Atten), 6000 (NR_sw_2), 4500 (NR_u_fak_0), 5000 (NR_u_fak), 1 (EC_block_length), 150 (EC_nr_coeff_real), 150 (EC_nr_coeff_complex1), 150 (EC_nr_coeff_complex2), 136 (EC_nr_coeff_complex3), 136 (EC_nr_coeff_complex4), 136 (EC_nr_coeff_complex5) • LISA-U120 / LISA-U130 o Paths 0, 1, 2: 0x01fd (HF_algorithm_init), NA (HF_Algorithm_Restart), NA (Step_Width), NA (LMS_Length), NA (LMS_Offset), NA (Block_Length), NA (RXTX_Relation), 0 (Add_Atten), 0 (Min_Atten), 500 (Max_Atten), 8192 (NR_sw_2), 7500 (NR_u_fak_0), 7500 (NR_u_fak), 2 (EC_block_length), 100 (EC_nr_coeff_real), 100 (EC_nr_coeff_complex1), 100 (EC_nr_coeff_complex2), 60 (EC_nr_coeff_complex3), 60 (EC_nr_coeff_complex4), 60 (EC_nr_coeff_complex5) o Path 4: 0x01fd (HF_algorithm_init), NA (HF_Algorithm_Restart), NA (Step_Width), NA (LMS_Length), NA

AT command	Description	AT interface configuration sharing	Factory-programmed value / Remarks
			(LMS_Offset), NA (Block_Length), NA (RXTX_Relation), 50 (Add_Atten), 100 (Min_Atten), 500 (Max_Atten), 8192 (NR_sw_2), 7500 (NR_u_fak_0), 7500 (NR_u_fak), 2 (EC_block_length), 220 (EC_nr_coeff_real), 220 (EC_nr_coeff_complex1), 220 (EC_nr_coeff_complex2), 60 (EC_nr_coeff_complex3), 60 (EC_nr_coeff_complex4), 60 (EC_nr_coeff_complex5) • SARA-G340 / SARA-G350 o Path 0: 0x31fd (HF_algorithm_init), NA (HF_Algorithm_Restart), NA (Step_Width), NA (LMS_Length), NA (LMS_Offset), NA (Block_Length), NA (RXTX_Relation), 0 (Add_Atten), 0 (Min_Atten), 588 (Max_Atten), 8192 (NR_sw_2), 16384 (NR_u_fak_0), 16384 (NR_u_fak), 2 (EC_block_length), 100 (EC_nr_coeff_real), 100 (EC_nr_coeff_complex1), 100 (EC_nr_coeff_complex2), 0 (EC_nr_coeff_complex3), 0 (EC_nr_coeff_complex4), 0 (EC_nr_coeff_complex5) o Path 1: 0x31fd (HF_algorithm_init), NA (HF_Algorithm_Restart), NA (Step_Width), NA (LMS_Length), NA (LMS_Offset), NA (Block_Length), NA (RXTX_Relation), 0 (Add_Atten), 0 (Min_Atten), 588 (Max_Atten), 8192 (NR_sw_2), 16384 (NR_u_fak_0), 16384 (NR_u_fak), 2 (EC_block_length), 100 (EC_nr_coeff_real), 100 (EC_nr_coeff_complex1), 100 (EC_nr_coeff_complex2),0 (EC_nr_coeff_complex3),0 (EC_nr_coeff_complex4),0 (EC_nr_coeff_complex5) o Path 2: 0x31fd (HF_algorithm_init), NA (HF_Algorithm_Restart), NA (Step_Width), NA (LMS_Length), NA (LMS_Offset), NA (Block_Length), NA (RXTX_Relation), 0 (Add_Atten), 0 (Min_Atten), 588 (Max_Atten), 8192 (NR_sw_2), 16384 (NR_u_fak_0), 16384 (NR_u_fak), 2 (EC_block_length), 100 (EC_nr_coeff_real), 100 (EC_nr_coeff_complex1), 100 (EC_nr_coeff_complex2), 0 (EC_nr_coeff_complex3),0 (EC_nr_coeff_complex4),0 (EC_nr_coeff_complex5) o Path 4: 0x31fd (HF_algorithm_init), NA (HF_Algorithm_Restart), NA (Step_Width), NA (LMS_Length), NA (LMS_Offset), NA (Block_Length), NA (RXTX_Relation), 0 (Add_Atten), 0 (Min_Atten), 588 (Max_Atten), 8192 (NR_sw_2), 16384 (NR_u_fak_0), 16384 (NR_u_fak), 2 (EC_block_length), 100 (EC_nr_coeff_real), 100 (EC_nr_coeff_complex1), 100 (EC_nr_coeff_complex2), 0 (EC_nr_coeff_complex3), 0 (EC_nr_coeff_complex4), 0 (EC_nr_coeff_complex5) • LEON-G1 o Path 0: 0x01fd (HF_algorithm_init), 0x016e (HF_Algorithm_Restart), 2200 (Step_Width), 250 (LMS_Length), 3 (LMS_Offset), 5 (Block_Length), 150 (RXTX_Relation), 0 (Add_Atten), 0 (Min_Atten), 500 (Max_Atten), 4096 (NR_sw_2), 16384 (NR_u_fak_0), 16384 (NR_u_fak) o Path 1: 0x01fd (HF_algorithm_init), 0x016e (HF_Algorithm_Restart), 2200 (Step_Width), 250 (LMS_Length), 3 (LMS_Offset), 5 (Block_Length), 150 (RXTX_Relation), 0 (Add_Atten), 0 (Min_Atten), 500 (Max_Atten), 4096 (NR_sw_2), 16384 (NR_u_fak_0), 16384 (NR_u_fak) o Path 2: 0x01fd (HF_algorithm_init), 0x016e (HF_Algorithm_Restart), 2200 (Step_Width), 250 (LMS_Length), 8 (LMS_Offset), 5 (Block_Length), 150 (RXTX_Relation), 0 (Add_Atten), 0 (Min_Atten), 500 (Max_Atten), 4096 (NR_sw_2), 16384 (NR_u_fak_0), 16384 (NR_u_fak)

AT command	Description	AT interface configuration sharing	Factory-programmed value / Remarks
+UMGC	Microphone gain control	Yes	• TOBY-L4 o The digital gain of scal_i2s_in is 88. • LARA-R2 / TOBY-R2 / SARA-U2 / LISA-U2 o All the paths are set to: NA (analog gain), 8192 (digital gain) • LISA-U120 / LISA-U130 o Path 0: 12 (analog gain), 8192 (digital gain) o Path 1: 12 (analog gain), 8192 (digital gain) o Path 2: 6 (analog gain), 8192 (digital gain) o Path 4: 13 (analog gain), 8192 (digital gain) • SARA-G340 / SARA-G350 o Path 0: 10 (analog gain),8192 (digital gain) o Path 1: 10 (analog gain),8192 (digital gain) o Path 2: 6 (analog gain),8192 (digital gain) o Path 4: 10 (analog gain),8192 (digital gain) • LEON-G1 o Path 0: 10 (analog gain), 9384 (digital gain) o Path 1: 12 (analog gain), 8192 (digital gain) o Path 2: 6 (analog gain), 8192 (digital gain)
+UPSV	Power Saving configuration	Yes	• TOBY-L4 - 1 (power saving enabled), 5000 (guard period to enter S3 state), 10000 (guard period to enter suspended state) • TOBY-L2 / MPCI-L2 / LARA-R2 / TOBY-R2 / SARA-U2 / LISA-U2 / LISA-U1 / SARA-G4 / SARA-G3 / LEON-G1 - 0 (power saving disabled)
+USGC	Speaker gain control	Yes	• TOBY-L4 o The digital gain of the scal_i2s_out is 88. • LARA-R2 / TOBY-R2 / SARA-U2 / LISA-U2 o For all the paths are set to: NA (Speaker gain), NA (Headset gain), 8192 (speech and Tone Generator gain), 16384 (Synthesizers gain), NA (Speech gain) • LISA-U120 / LISA-U130 o Path 0: NA (speaker gain), 0 (headset gain), 8192 (speech and tone Generator gain), 16384 (synthesizers gain), NA (speech gain) o Path 1: NA (speaker gain), 1 (headset gain), 8192 (speech and tone Generator gain), 16384 (synthesizers gain), NA (speech gain) o Path 3: NA (speaker gain), 0 (headset gain), 8192 (speech and tone Generator gain), 16384 (synthesizers gain), NA (speech gain) o Path 4: NA (speaker gain), 3 (headset gain), 8192 (speech and tone Generator gain), 16384 (synthesizers gain), NA (speech gain) • SARA-G340 / SARA-G350 o Path 0: 3 (speaker gain), 3 (headset gain), 8192 (speech and tone Generator gain), 16384 (synthesizers gain), 8192 (speech gain) o Path 1: 3 (speaker gain), 3 (headset gain), 8192 (speech and tone Generator gain), 16384 (synthesizers gain), 8192 (speech gain) o Path 3: 3 (speaker gain), 3 (headset gain), 8192 (speech and tone Generator gain), 16384 (synthesizers gain), 8192 (speech gain) o Path 4: 5 (speaker gain), 0 (headset gain), 8192 (speech and tone Generator gain), 16384 (synthesizers gain), 8192 (speech gain) • LEON-G1

AT command	Description	AT interface configuration sharing	Factory-programmed value / Remarks
			o Path 0: 6 (speaker gain), 1 (headset gain), 8192 (speech and tone generator gain), 16384 (synthesizers gain), 8192 (speech gain) o Path 1: 6 (speaker gain), 0 (headset gain), 8192 (speech and tone generator gain), 16384 (synthesizers gain), 10 240 (speech gain) o Path 3: 0 (speaker gain), 6 (headset gain), 8192 (speech and tone generator gain), 16384 (synthesizers gain), 8191 (speech gain) o Path 4: 6 (speaker gain), 6 (headset gain), 8192 (speech and tone generator gain), 16384 (synthesizers gain), 8191 (speech gain)
+USTN	Sidetone	Yes	• LARA-R2 / TOBY-R2 / SARA-U2 / LISA-U2 o Gain on all paths for side tone: 512 • LISA-U120 / LISA-U130 / SARA-G340 / SARA-G350 o Gain on path 0 for side tone: 512 o Gain on path 1 for side tone: 512 o Gain on path 3 for side tone: 0 o Gain on path 4 for side tone: 0 • LEON-G1 o Gain on path 0 for side tone: 2249 o Gain on path 1 for side tone: 2249 o Gain on path 3 for side tone: 0 o Gain on path 4 for side tone: 0
+USTS	Smart temperature supervisor	Yes	• TOBY-L4 - 3 (smart temperature feature enabled with no indication) • TOBY-L2 / MPCI-L2 / LARA-R2 / TOBY-R2 / SARA-U2 / LISA-U2 / LISA-U1 / SARA-G3 / LEON-G1 - 0 (smart temperature feature disabled)
+UTI	Audio parameters tuning	Yes	See product-specific Extended Audio Tuning Application Note for the factory-programmed values stored in the profiles.
+UTPB	Parity bit transmission over the air	Yes	0 (transmission of the parity bit over the air is disabled)
+UUBF	Uplink biquad digital filters	Yes	• LARA-R2 / TOBY-R2 / SARA-U2 / LISA-U2 / LISA-U1 / SARA-G340 / SARA-G350 - For all the paths, all filters are set to: 0 (a1), 0 (b1), 0 (a2), 0 (b2), 32767 (a0) • LEON-G1 o Path 0: Filter1: -13915 (a1), 2249 (b1), 4377 (a2), -325 (b2), 23450 (a0) Filter2: 21682 (a1), -2312 (b1), 17984 (a2), -15517 (b2), 32767 (a0) o Path 1: Filter1: -29322 (a1), -29141 (b1), 29322 (a2), 26240 (b2), 29322 (a0) Filter2: 29322 (a1), 29141 (b1), 29322 (a2), 26240 (b2), 29322 (a0) o Path 2: Filter1: 0 (a1), 0 (b1), 0 (a2), 0 (b2), 32767 (a0) Filter2: 0 (a1), 0 (b1), 0 (a2), 0 (b2), 32767 (a0)
+UVGC	Volume gain control	Yes	• <componentID> 0 (External codec Maxim MAX9860) • <gainID> 0: -5 (DVA: -5 dB) • <gainID> 1: OFF (DVST: OFF) • <gainID> 2: 20 (PAM: 20 dB) • <gainID> 3: 4 (PGAM: 4 dB)
E	Echo status	No	1 (echo enabled)
Q	Result code suppression	No	0 (DCE transmits result codes)
S0	Automatic answer	No	0 (automatic answering disabled)
S2	Escape character selection	No	43 (043 corresponds the '+' character)

AT command	Description	AT interface configuration sharing	Factory-programmed value / Remarks
S3	Command line termination character	No	13 (0x0d corresponds to the carriage return character)
S4	Response formatting character	No	10 (0x0a corresponds to the line feed character)
S5	Command line editing character	No	8 (008 corresponds to the backspace character)
S7	Connection completion timeout	No	60
V	DCE response format	No	1 (Verbose response text)
X	Result code selection and call progress monitoring control	No	4 (CONNECT <text> result code is given upon entering online data state; dial tone and busy detection are both enabled)

B.2 Parameters stored in non volatile memory

The following table lists the AT commands which setting can be stored in the non volatile memory with their parameters and the factory-programmed values.

AT command	Description	Factory-programmed value / Comment
&Y	Designate a default reset profile	0 (profile 0 selected)
+CALA	Alarm	No alarms are stored
+CALM	Alert sound mode	0 (mute disabled)
+CCLK	Clock	04/01/01,00:00:00+00
+CEMODE	UE modes of operation for EPS	• TOBY-L200-02S / TOBY-L200-03A / TOBY-L200-03S / TOBY-L210-02S / TOBY-L210-03A / TOBY-L210-03S / TOBY-L210-62S / TOBY-L220-02S / TOBY-L280 / MPCI-L200-02S / MPCI-L200-03S / MPCI-L210-02S / MPCI-L210-03S / MPCI-L220-02S / MPCI-L280 / LARA-R202 / LARA-R211 / LARA-R280 / TOBY-R2 - 1 (CS/PS mode 1 of operation; "voice-centric") • TOBY-L200-00S / TOBY-L201 / TOBY-L210-00S / TOBY-L210-60S / TOBY-L220-62S / MPCI-L200-00S / MPCI-L201 / MPCI-L210-00S / MPCI-L210-60S / MPCI-L220-62S / LARA-R203 / LARA-R204 / LARA-R220 - 2 (CS/PS mode 2 of operation; "data centric")
+CEVDP	UE's voice domain preference E-UTRAN	• TOBY-L2 / LARA-R202 / LARA-R211 / LARA-R280 / TOBY-R2 - 3 (IMS PS voice preferred, CS voice as secondary) • LARA-R203 - 4 (IMS PS voice only)
+CGDCONT	PDP context definition	• TOBY-L4106 / TOBY-L4206 / TOBY-L4906 / TOBY-L2 / MPCI-L2 / LARA-R2 / TOBY-R2 / SARA-U2 / LISA-U2 / LISA-U1 / SARA-G4 - all contexts are undefined • TOBY-L4006 / LARA-R202 / LARA-R203 / LARA-R220 / LARA-R280 / TOBY-R2 - For <cid>= 1: <APN>= "nxtgenphone" and <PDP_type>= "IPV4V6" • SARA-G3 / LEON-G1 - the context's setting is not permanently stored; the PDP contexts are permanently stored when they are defined or deleted
+CGSMS	Select service for MO SMS messages	• 1 (CS service selected) • TOBY-L4 / TOBY-L201 / MPCI-L201 - The command setting is not stored in NVM
+CISRVCC	IMS single radio voice call continuity	• LARA-R202 / LARA-R211 / LARA-R280 / TOBY-R2 - 1 (SRVCC supported)
+CLIR	Calling line identification restriction	• 0 (presentation indicator used according to the subscription of the CLIR service) • SARA-U2 / LISA-U2 / LISA-U1 / SARA-G4 / SARA-G3 / LEON-G1 - The command setting is not persistent
+CLVL	Loudspeaker volume level	• TOBY-L2 - 30 (loudspeaker volume level)

AT command	Description	Factory-programmed value / Comment
		• TOBY-L4 / LARA-R202 / LARA-R203 / LARA-R211 / LARA-R280 / TOBY-R2 / SARA-U2 / LISA-U2 / LISA-U1 / SARA-G3 / LEON-G1 - 80 (loudspeaker volume level)
+CMMIVT	UE's Mobility Management IMS Voice Termination	2 (Mobility Management for IMS Voice Termination enabled)
+CNEM	Network emergency bearer services support	• TOBY-L4 / LARA-R2 / TOBY-R2 - The setting is not saved in NVM
+CPMS	Preferred message storage	• TOBY-L200-02S / TOBY-L200-03A / TOBY-L200-03S / TOBY-L210-02S / TOBY-L210-03A / TOBY-L210-03S / TOBY-L210-60S / TOBY-L210-62S / TOBY-L220 / TOBY-L280 / MPCI-L200-02S / MPCI-L200-03S / MPCI-L210-02S / MPCI-L210-03S / MPCI-L220 / MPCI-L280 / SARA-U2 / LISA-U2 / LISA-U1 / SARA-G340 / SARA-G350 / LEON-G1 - <mem1>, <mem2> and <mem3> are set to "MT"="ME"+"SM" with "ME" preferred • TOBY-L200-00S / TOBY-L201 / TOBY-L210-00S / TOBY-L210-60S / MPCI-L200-00S / MPCI-L201 / MPCI-L210-00S / MPCI-L210-60S / SARA-G300 / SARA-G310 - <mem1>, <mem2> and <mem3> are set to "SM" • LARA-R2 / TOBY-R2 / SARA-G4 - <mem1>, <mem2> and <mem3> are set to "ME" • TOBY-L4 - <mem1>, <mem2> and <mem3> are set to "SM". The command setting is not stored in NVM
+CRSL	Ringer sound level	4 (ringer sound level)
+CSAS	Save settings	0 (profile 0 where to store the active message settings)
+CSGT	Set greeting text	Greeting text is empty
+CTZU	Automatic time zone update	• TOBY-L4 / TOBY-L201-02S / TOBY-L210-62S / MPCI-L201-02S / LARA-R2 / TOBY-R2 - 1 (automatic time zone via NITZ enabled) • TOBY-L200 / TOBY-L201-01S / TOBY-L210-00S / TOBY-L210-02S / TOBY-L210-03A / TOBY-L210-03S / TOBY-L210-60S / TOBY-L220 / TOBY-L280 / MPCI-L200 / MPCI-L201-01S / MPCI-L210 / MPCI-L220 / MPCI-L280 / SARA-U2 / LISA-U2 / LISA-U1 / SARA-G4 / SARA-G3 / LEON-G1 - 0 (automatic time zone via NITZ disabled) • TOBY-L201-02S / MPCI-L201-02S - In TOBY-L201-02S-00, MPCI-L201-02S-00 the factory-programmed value is 0 (automatic time zone via NITZ disabled)
+CVDP	UE's voice domain preference UTRAN	1 (CS voice only)
+UBIP	Bearer Independent Protocol status indication	0 (BIP status indication disabled)
+UBIPAPN	Default BIP APN configuration	"" (Empty string as default APN for BIP service)
+UBMCONF	Boot mode configuration	1 (router mode), 0 (bridge DHCP server disabled), 4 (CID used by DHCP server)
+UCD	Jamming detection configuration	• SARA-G340 / SARA-G350 - 0 (jamming detection disabled), 255 (number of 2G minimum disturbing carriers), 63 (number of 3G minimum disturbing carriers) • SARA-U2 / LISA-U2 / LISA-U1 / SARA-G340-00S / SARA-G340-01S / SARA-G350-00S / SARA-G350-00X / SARA-G350-01B / SARA-G350-01S / LEON-G1 - The command settings is not stored in NVM
+UCGATT	Auto attach to PS domain on power on configuration	1 (enables the auto attach at the module power on)
+UCGCLASS	Changing the startup MS class	"B" (MS class B)
+UCGDFLT	Initial PDP context configuration	"IP" (<PDP_type>), "" (<APN>), 0 (<emg_ind>), 0 (<ipcp_req>), 0 (<pcscf_v6>), 0 (<icmn_sig>), 0 (<dns_v6>), 1 (<ip_via_nas>), 0 (<ip_via_dhcp>), 0 (<pcscf_v4>), 1 (<dns_v4>), 0 (<auth_type>), NULL (<auth_user>), NULL (<auth_pass>), "" (<vendor_specific>)
+UCLASS	Device class setting	• TOBY-L2 / MPCI-L2 / SARA-U2 / LISA-U2 / LISA-U1 - 12 (GPRS class 12), 12 (EGPRS class 12), 11 (DTM GPRS class 11), 11 (DTM EGPRS class 11)

AT command	Description	Factory-programmed value / Comment
		• LARA-R202 / LARA-R203 / LARA-R204 / LARA-R220 / LARA-R280 / TOBY-R2 - 33 (GPRS class 33), 33 (EGPRS class 33), 33 (DTM GPRS class 33), 33 (DTM EGPRS class 33) • LARA-R211 - 33 (GPRS class 33), 33 (EGPRS class 33), 0, 0 • SARA-G3 / LEON-G1 - 10 (GPRS class 10) • SARA-G4 - 12 (GPRS class 12)
+UCSD	Circuit Switched Data	Empty profile
+UCTS	CTS line state in case of disabled HW flow control	0 (legacy behavior: CTS line is set to ON state if HW flow control is disabled)
+UDAMCFG	Device Aggresion Management configuration	1 (DAM enabled)
+UDCONF=9	Uplink user data plane configuration	1 (uplink user data plane enabled)
+UDCONF=12	ESM code 52 handling (additional PDP context activation)	1 (ESM code 52 handling enabled)
+UDCONF=13	Send message (+CMGS/ +CMSS) set commands conclusion configuration	0 (final result code issued before the transaction with the network takes place, UUCMSRES URC disabled)
+UDCONF=20	Steering of Roaming configuration	• LARA-R2 / SARA-U201 / SARA-U260 / SARA-U270-00S / SARA-U270-00X / SARA-U270-03A / SARA-U270-03S / SARA-U270-04B / SARA-U270-73S / SARA-U280 / LISA-U2 - 1 (SoR is enabled) • SARA-U270-53S / SARA-G3 / LEON-G1 - 0 (SoR is disabled)
+UDCONF=30	Speech codec configuration	• TOBY-L2 - 3647 • LARA-R211 - 63 • TOBY-R200 - 3647 • LARA-R202 / LARA-R203 / LARA-R280 / TOBY-R202 - 3584 • SARA-U2 / LISA-U2 - 3135 • SARA-U270-53S - 1567 • SARA-G3 / LEON-G1 - 31
+UDCONF=32	Connection type groups enable/disable	127 (UDI multimedia, UDI data, RDI, audio 3.1 kHz, all sync transparent, all async transparent, all async non transparent supported)
+UDCONF=33	Waiting call tone configuration	4 (waiting call supervisory tone volume)
+UDCONF=40	User defined power reduction	• LARA-R2 / TOBY-R2 / SARA-U2 / LISA-U2 - 2 (MSPR GPRS and EDGE profile), 2 (MSPR GMSK and EDGE profile) • TOBY-L2 / MPCI-L2 - The command settings is not stored in NVM
+UDCONF=50	SIM hot insertion detection	0 (disabled)
+UDCONF=54	Refresh delay events management	8 (ENVELOPE, SMS-PP download will delay a REFRESH command)
+UDCONF=55	PLMN search configuration in Out Of Coverage conditions	0 (<timer1> and <timer2> disabled)
+UDCONF=56	Purging of temporary mobile identities after SIM refresh	1 (<purge_identities_enabled> enabled)
+UDCONF=60	F-DPCH/enhanced F-DPCH configuration	• TOBY-L2 / MPCI-L2 / LARA-R2 / TOBY-R2 / SARA-U2 / LISA-U200-02S / LISA-U200-03S / LISA-U200-52S / LISA-U200-62S / LISA-U200-83S / LISA-U201 / LISA-U260-02S / LISA-U270-02S - 2 (F-DPCH and Enhanced F-DPCH enabled) • LISA-U200-01S / LISA-U230 / LISA-U260-01S / LISA-U270-01S - 0 (F-DPCH and Enhanced F-DPCH disabled)
+UDCONF=61	Fast Dormancy configuration	2 (all the <FD_mode> values are allowed)
+UDCONF=64	Automatic default gateway route handling mechanism control	1 (automatic default gateway route handling mechanism enabled)
+UDCONF=66	IPv6 configuration	• TOBY-L200-03S / TOBY-L201-02S / TOBY-L210-00S / TOBY-L210-02S / TOBY-L210-03A / TOBY-L210-03S / TOBY-L220 / TOBY-L280 / MPCI-L201-02S / MPCI-L210 / MPCI-L220 / MPCI-L280 - 1 (enabled)

AT command	Description	Factory-programmed value / Comment
		• TOBY-L200-00S / TOBY-L200-02S / TOBY-L210-60S / TOBY-L210-62S / MPCI-L200 / MPCI-L210-60S / SARA-U2 / LISA-U2 - 0 (disabled) • TOBY-L201-01S / MPCI-L201-01S - 0 (disabled) in AT&T, 1 in VZW (enabled) • TOBY-L201-02S / MPCI-L201-02S - On TOBY-L201-02S-00, MPCI-L201-02S-00, 0 (disabled) in AT&T, 1 in VZW (enabled) • TOBY-L200-03S - On TOBY-L200-03S, 0 (disabled)
+UDCONF=67	Router mode configuration	1 (enabled)
+UDCONF=70	LCS positioning capabilities configuration	0 (standalone, MS-Based and MS-Assisted disabled)
+UDCONF=81	Integrity check on test networks configuration	• TOBY-L4 / TOBY-L2 / MPCI-L2 / LARA-R2 / TOBY-R2 / SARA-U2 / LISA-U2 - The command setting is not stored in the NVM
+UDCONF=90	eCall and InBM test configuration	0 (type of address octet), "" (eCall test or reconfiguration number empty), 43200 (32-bit timer duration: 12 hours)
+UDTMF	User setting for proactive DTMF tone generation	1 (proactive DTMF tone generation available)
+UDYNDNS	Dynamic DNS	0 (Client disabled), 0 (TZO.com as dynamic DNS service provider), "" (Domain name empty), "" (Username empty), "" (Password empty)
+UECALLCFG	eCall configuration mode	• TOBY-L4 - 0 (analog audio path), 0 (headset profile)
+UEXTDCONF	Automatic configuration of the Maxim MAX9860 audio codec	0 (disabled),"00000000101E3F04000006330050000000 8A"(MAX9860 registers configuration)
+UFACTORY	Restore factory configuration	0 (no FS factory restore), 0 (no NVM factory restore)
+UFDAC	Fast dormancy activation	• TOBY-L2 / MPCI-L2 / LARA-R2 / TOBY-R2 / SARA-U2 / LISA-U200 / LISA-U201 / LISA-U260 / LISA-U270-02S - 3 (automatic SCRI transmission request deactivated, 5 (FD Delay Timer=5 s), 5 (FD Inhibit Timer=5 s) • LISA-U270-62S / LISA-U270-63S / LISA-U270-68S - 2 (automatic SCRI transmission request activated), 7 (FD Delay Timer=7 s), 120 (FD Inhibit Timer=120 s)
+UGAOF	AssistNow Offline configuration	"http://alp.u-blox.com/current_14d.alp" (AssistNow Offline URL file),0, 1 (One minute of timeout after a fail download), 3 (3 attempts in case of failed download)
+UGAOP	AssistNow Online configuration	"eval1-les.services.u-blox.com" (Host name server), 46434 (Server port), 1000 (Expected network latency: 1000 ms), 0 (AssistNow Online data downloaded at GPS receiver power up)
+UGGGA	Get GPS fix data	0 (NMEA $GGA messages disabled)
+UGGLL	Get geographic position	0 (NMEA $GLL messages disabled)
+UGGSA	Get satellite information	0 (NMEA $GSA messages disabled)
+UGGSV	Get number of GNSS satellites in view	0 (NMEA $GSV messages disabled)
+UGPIOC	GPIO functionality setting	• TOBY-L4 - 255 (<gpio1>), 255 (<gpio2>), 255 (<gpio3>), 255 (<gpio4>), 7 (<gpio5>), 255 (<gpio6>), 255 (<gpio7>), 0 (<gpio8>) • TOBY-L2 - 15 (<gpio1>), 15 (<gpio2>), 15 (<gpio3>), 15 (<gpio4>), 16 (<gpio5>), 255 (<gpio6>), 255 (<gpio7>), 0 (<gpio8>), 12 (<gpio9>), 12 (<gpio10>), 12 (<gpio11>), 12 (<gpio12>), 7 (<gpio13>), 14 (<gpio14>) • TOBY-R2 - 255 (<gpio1>), 3 (<gpio2>), 4 (<gpio3>), 0 (<gpio4>), 7 (<gpio5>), 12 (<gpio6>), 12 (<gpio7>), 12 (<gpio8>), 12 (<gpio9>) • LARA-R2 - 255 (<gpio1>), 3 (<gpio2>), 4 (<gpio3>), 0 (<gpio4>), 7 (<gpio5>), 12 (<gpio6>), 12 (<gpio7>), 12 (<gpio8>), 12 (<gpio9>) • SARA-U2 - 255 (<gpio1>), 3 (<gpio2>), 4 (<gpio3>), 5 (<gpio4>), 12 (<gpio5>), 12 (<gpio6>), 12 (<gpio7>), 12 (<gpio8>), 7 (<gpio9>) • LISA-U2 - 255 (<gpio1>), 3 (<gpio2>), 4 (<gpio3>), 5 (<gpio4>), 7 (<gpio5>), 12 (<gpio6>), 12 (<gpio7>), 12 (<gpio8>), 12 (<gpio9>), 13 (<gpio10>), 13 (<gpio11>), 13 (<gpio12>), 13 (<gpio13>), 13 (<gpio14>) • LISA-U200-00S - 255 (<gpio1>), 255 (<gpio2>), 255 (<gpio3>), 255 (<gpio4>), 7 (<gpio5>), 255 (<gpio6>), 255 (<gpio7>), 255 (<gpio8>), 255 (<gpio9>) • LISA-U1 - 255 (<gpio1>), 3 (<gpio2>), 4 (<gpio3>), 5 (<gpio4>), 7 (<gpio5>)

AT command	Description	Factory-programmed value / Comment
		• SARA-G340 / SARA-G350 - 255 (<gpio1>), 3 (<gpio2>), 4 (<gpio3>), 5 (<gpio4>) • SARA-G4 - 255 (<gpio1>), 255 (<gpio2>), 255 (<gpio3>), 255 (<gpio4>) • LEON-G1 - 8 (<gpio1>), 255 (<gpio2>), 3 (<gpio3>), 4 (<gpio4>), 5 (<gpio5>)
+UGPRF	GNSS profile configuration	0 (No data flow on multiplexer, file and IP address), 0 (IP port not defined), "" (Server address string not defined)
+UGRMC	Get recommended minimum GNSS data	0 (NMEA $RMC messages disabled)
+UGSRV	Aiding server configuration	"cell-live1.services.u-blox.com" (primary MGA server), "cell-live2.services.u-blox.com" (secondary MGA server), 14 (Number of days for validation of Offline data), 4 (Number of weeks for validation of Offline data), 1 (Resolution of offline data for MGA), 65 (Desired GNSS for the (offline) aiding: GPS and GLONASS), 0 (AssistNow Online data are downloaded at GNSS receiver power up), 15 (all the desired data types for the (online) aiding are set)
+UGVTG	Get course over ground and ground speed	0 (NMEA $VTG messages disabled)
+UGZDA	Get GPS time and date	0 (NMEA $ZDA messages disabled)
+UHSDUPA	HSDPA/HSUPA mode configuration	• LARA-R202 / LARA-R280 / TOBY-R2 / SARA-U2 / LISA-U2 / LISA-U1 - 1 (HSDPA on), 8 (category 8), 1 (HSUPA on), 6 (category 6) • TOBY-L200 / TOBY-L201 / MPCI-L200 / MPCI-L201 - 1 (HSDPA on), 14 (category 14), 1 (HSUPA on), 6 (category 6) • TOBY-L4 / TOBY-L210 / TOBY-L220 / TOBY-L280 / MPCI-L200 / MPCI-L220 / MPCI-L280 - 1 (HSDPA on), 24 (category 24), 1 (HSUPA on), 6 (category 6)
+UI2S	I^2S digital interface mode	• TOBY-L4 - 0 (PCM mode 0), 0 (I2S is connected to I2S_A connection point), 0 (CLK and WA active in dynamic mode), 3 (sample rate: 16 kHz), 0 (master mode) • TOBY-L2 - 21 (PCM mode 21), 1 (I2S is connected to I2Sx connection point), 0 (CLK and WA active in dynamic mode), 3 (sample rate: 16 kHz), 0 (master mode) • LARA-R2 / TOBY-R2 / SARA-U2 / LISA-U2 - 1 (PCM mode 1), 1 (I2S is connected to I2Sx connection point), 0 (CLK and WA active in dynamic mode), 3 (sample rate: 16 kHz), 0 (master mode) • LISA-U2 I2S1 settings - 1 (PCM mode 1), 3 (I2S1 is connected to I2Sx connection point), 0 (CLK and WA active in dynamic mode), 3 (sample rate: 16 kHz), 0 (master mode) • LISA-U120 / LISA-U130 - 0 (PCM mode 0), 1 (I2S is connected to I2Sx connection point), 0 (CLK and WA active in dynamic mode), 0 (sample rate: 8 kHz), 0 (master mode) • SARA-G3 - 1 (PCM mode 1), 1 (I2S is connected to I2Sx connection point), 0 (CLK and WA active in dynamic mode) • LEON-G1 - 4 (normal mode 4),2 (I2S is connected to I2Sy connection point), 1 (CLK and WA active in continuous mode)
+UICMGSMODE	MO SMS mode configuration	2 (3GPP2 mode)
+UIFCONF	Interface configuration	• TOBY-L4 o usb0: 0 (NCM interface type), 0 (interface number), 1 (interface enabled), 192.168.2.16 (interface IPv4 address), 255.255.255.0 (interface IPv4 network mask), 1 (interface IPv4 DHCP server status enabled), 192.168.2.100 (first IPv4 address of the interface DHCP server range), 192.168.2.150 (last IPv4 address of the interface DHCP server range), 50950 (TCP control port number), 50951 (TCP data port number) o eth0: 1 (ETH interface type), 0 (interface number), 1 (interface enabled), 192.168.90.60 (interface IPv4 address), 255.255.255.0 (interface IPv4 network mask), 1 (interface IPv4 DHCP server status enabled), 192.168.90.100 (first IPv4 address of the interface DHCP server range), 192.168.90.150 (last IPv4 address of the interface DHCP server range), 50960 (TCP control port number), 50961 (TCP data port number)

AT command	Description	Factory-programmed value / Comment
+UIMSCFG	IMS client configuration	• 9: 3GPP_CONFERENCE_URI o LARA-R211 - <data>= "" • 50: AUTOLOGIN_MODE o LARA-R202 / LARA-R203 / LARA-R204 / LARA-R211 / TOBY-R2 - <data>= 1 (AUTOLOGIN_ALWAYS) o LARA-R204 - <data>= 2 (AUTOLOGIN_HOME_NETWORK) (on LARA-R204-02B-00 is <data>= 1 (AUTOLOGIN_ALWAYS)) • 51: APN_NAME o LARA-R204 - "IMS". On LARA-R204-02B-00 / LARA-R204-02B-01 the factory-programmed value is "VZWIMS". o LARA-R202 / LARA-R203 / LARA-R211 / TOBY-R2 - "ims". • 53: PREFFERED_PDPTYPE (<data>= 2) • 162: IMSI_in_Contact_header o LARA-R202 / LARA-R203 - 1 (IMSI present in SIP "contact" header) • 164: aSRVCC_configuration o LARA-R202 - 1 (aSRVCC call enabled) • 200: XCAP_APN o LARA-R204 - "NONE". o LARA-R211 - "ims". o LARA-R202 / LARA-R203 / TOBY-R2 - "nxtgenphone". • 201: XCAP_ROOT_URI (<data>= empty string) • 202: XCAP_AUTH_USER_NAME (<data>= empty string) • 203: XCAP_AUTH_PASSWORD (<data>= empty string) • 204: XCAP_TRANSPORT_TYPE (<data>= 0 TRANSPORT_HTTP) • 205: XCAP_Bearer_Deactivation_Timer (<data>= 3) • 253: SIP_URI_FORMAT o LARA-R204 - 2. o LARA-R202 / LARA-R203 / LARA-R211 / TOBY-R2 - 1. • 264: VoPS_registration o LARA-R204 - 0. o LARA-R202 / LARA-R203 / LARA-R211 / TOBY-R2 - 1. • 269: VoLTE_conference (<data>= 1)
+UIMSCONF	IMS configuration setting	• "KEY_IMS_PDP_APN": "IMS" (IMS Access Point Name) • "KEY_IMS_PDP_CID": 0 (PDP context identifier) • "KEY_IMS_PDP_TYPE": "IPV4V6" (IMS PDP type) • "KEY_AUTH_TYPE_AKA": "true" (AKAv1 MD5 Digest Authentication enabled) • "KEY_AUTH_TYPE_AKAV2": "false" (AKAv2 MD5 Digest Authentication disabled) • "KEY_AUTH_TYPE_MD5": "false" (MD5 Digest Authentication disabled) • "KEY_SEC_AGREE": "true" (Security Agreement and IPsec enabled) • "KEY_XDM_URL": "" (XDM/XCAP Server Root URL empty) • "KEY_PASSWORD": "" (password for IMS MD5 Digest Authentication and XCAP Authentication empty) • "KEY_HOME_NETWORK_DOMAIN": "" (Home Domain/Realm empty string) • "KEY_PRIVATE_IDENTITY": "" (private User ID for IMS Registration and XDM Authentication (IMPI) empty) • "KEY_PUBLIC_IDENTITY": "" (public User ID empty) • "KEY_CONFIG_SOFT_SIM": "false" (Software SIM feature disabled) • "KEY_CONFIG_SOFT_SIM_K": "" (Software SIM secret K empty) • "KEY_CONFIG_SOFT_SIM_OP": "" (Software SIM secret OP empty string) • "KEY_PCSCF_SERVER_ADDRESS": "" (P-CSCF IP Address/Domain empty) • "KEY_DNS_SERVER": "" (DNS IP address empty)

AT command	Description	Factory-programmed value / Comment
		• "KEY_SIP_TIMER_T1": Timer_T1 set to 2000 if the <MNO> parameter of the +UMNOCONF command is set to 0 (regulatory MNO), 3000 if the <MNO> parameter is set to 3 (Verizon). • "KEY_SIP_TIMER_T2": 16000 (Timer_T2) • "KEY_SIP_TIMER_T4": 17000 (Timer_T4) • "KEY_SIP_TIMER_TF": 64000 (Timer_TF) • "KEY_MTU_SIZE": 1500 (Maximum Transmission Unit (MTU)) • "KEY_IMS_CLIENT_PORT": 5060 (port 5060 used by the UE's SIP application) • "KEY_REG_EXPIRES": 600000 (IMS registration expiration time set to 600000) • "KEY_MAX_REG_EXPIRES": 600000 (maximum IMS registration expiration time set to 600000) • "KEY_RETRY_BASE_TIME": 30 (Retry Base Time set to 30) • "KEY_RETRY_MAX_TIME": 1800 (Retry Max Time set to 1800) • "KEY_REG_BARRED_USER_ID": "true" (Use Barred User ID in Registration and De-Registration feature disabled) • "KEY_EXPLICIT_UNSUB_REG_EVENT": "false" (unsubscription of the Registration Event Package during deregistration disabled) • "KEY_PCSCF_BACKOFF_PREFERENCE": "LIST" (Backoff on P-CSCF change due to server failure set to "LIST") • "KEY_SMSC_NUMBER": "" (SMSC phone number empty) • "KEY_SMSC_URI": "" (SMSC URI empty) • "KEY_MO_SMS_FORMAT": "3gpp" (SMS format set to "3gpp") • "KEY_MO_SMS_ENCODING": "gsm7" (SMS encoding to be used for Mobile Originated SMS set to "gsm7") • "KEY_QOS_PREFERENCE": "AUTO" (QoS precondition during SIP call set-up set to "AUTO") • "KEY_PDP_BEARER_MODE": "AUTO" (QoS Allocation Mode set to "AUTO") • "KEY_DOMAIN_PREFERENCE": "PS_PREF" (Domain Preference for the IMS Service Continuity feature set to "PS_PREF") • "KEY_SMS_PREFERENCE": "IMS_PREF" (preferred service used for MO SMS: "IMS_PREF") • "KEY_IMS_SUPPORT": "true" (IMS support and registration enabled) • "KEY_IMS_MWI_SUPPORT": "true" (MWI Event Package Support for IMS enabled) • "KEY_IMS_SIGCOMP_SUPPORT": "false" (Signal Compression Support for IMS Signaling feature disabled) • "KEY_IMS_RAT": "lteonly" (IMS will try to register on LTE RAT only) • "KEY_IMS_SMS_SEND_OK_WRITE_UICC": "false" (SMSes correctly sent not stored) • "KEY_IMS_SMS_SEND_NOK_WRITE_UICC": "false" (SMSes not sent due to network errors not stored)
+UIPCHGN	IP change notification	0 (IP change notification disabled)
+UIPCONF	Configure the Ethernet over USB IP network	• TOBY-L4 - <ipv4_address>: "192.168.2.16", <subnet_mask>: "255.255.255.0", <dhcp_ipv4_start>: "192.168.2.100", <dhcp_ipv4_end>: "192.168.2.150", <dhcp_status>: 1 • TOBY-L2 / MPCI-L2 - <ipv4_address>: "192.168.1.1", <subnet_mask>: "255.255.255.0", <dhcp_ipv4_start>: "192.168.1.100", <dhcp_ipv4_end>: "192.168.1.100"
+UIPTABLES	IP tables configuration	IPTABLES empty • TOBY-L4 - The command setting is not stored in the NVM
+UISS	SS domain configuration	• LARA-R211 - 1 (CSFB)
+UJAD	Smart jamming detection	• TOBY-L4 - The setting is not saved in NVM
+ULGASP	Last gasp configuration	• SARA-U2 o <GPIO_mode>: 0 (disabled) o <text>: "Last Gasp" o <msg_format>: 0 (text) o <tel_number>: "" (empty)

AT command	Description	Factory-programmed value / Comment
		o <profile_id>: 0 o <IP_protocol>: 17 (UDP) o <IP_addr:PORT>: "" (empty) o <method>: 0 (send SMS) o <max_pow_red>: 0 (no power reduction) o <urc_enable>: 0 (no URC)
+ULOCCELL	Configure cellular location sensor (CellLocate®)	0 (normal mode enabled)
+ULOCGNSS	Configure GNSS sensor	• 15 (Local aiding, AssistNow online, AssistNow offline, AssistNow autonomous enabled), 0 (power saving disabled), 3 (Minimum number of satellites for navigation), 7 (Minimum satellite signal level for navigation), 0 (Disabled initial Fix must be 3D flag), 0 (Static Hold Mode), 0 (SBAS disabled), 0 (Jamming indicator disabled), 0 (Antenna settings unknown), 0 (Broadband jamming detection threshold: 0 dB), 0 (Continuous wave jamming detection threshold: 0 dB), 1 (GPS), 0, 0 • LISA-U2 / LISA-U1 / SARA-G300 / SARA-G310 / SARA-G340-00S / SARA-G350-00S / SARA-G350-00X / LEON-G1 - 0 (no GPS)
+ULTECAT	LTE category configuration	0 (factory-programmed LTE category configuration applied), 4 (LTE category)
+UMAFE	Microphone analog and digital gains	• <analog_gain>: 0 (corresponds to 0 dB gain) • <adc_gain>: 2 (corresponds to 0 dB gain)
+UMCLK	Master clock control	• 0 CODEC_CLK mode setting (<mclk_mode>): clock out pin from LISA module (input for audio codec) is set as three state with pull down resistor. • 0 Setting of dynamic of the application mode (<enabling_mode>): <mclk_mode> setting is applied to CODEC_CLK pin only when audio path is active. After audio path is disabled (i.e. a call is hang up) CODEC_CLK is disabled too
+UMNOCONF	MNO configuration	• TOBY-L201 / MPCI-L201 / TOBY-R2 - 2 (AT&T configuration), 7 (automatic power cycle) • TOBY-L280 / MPCI-L280 - 4 (Telstra configuration), 1 (automatic power cycle) • LARA-R202 / LARA-R203 - 2 (AT&T configuration) • LARA-R204 - 3 (Verizon configuration), 7 (automatic power cycle)
+UMNOPLMN	PLMN list extensions	• 2,"310.030,310.150,310.170,310.280,310.380,310.410,310.560" (for AT&T) • 3,"310.590,310.890,311.480" (for Verizon) • 4,"505.11,505.71,505.72,505.01,530.04" (for Telstra)
+UMSEL	Microphone selection	• <mic_id>: 1 (corresponds to AMIC1)
+UNFM	Network friendly mode activation	0 (Network friendly mode deactivated), 0 (+UUNFM URC disabled)
+UNFMCONF	Network friendly mode configuration	• Back-off timer configuration parameter set(+UNFMCONF=0) o 60 (Back-off timer base: 60 s) o 2 (Multiplier factor of the geometrical sequence) o 7680 (back-off timer's maximum duration: 7680 s) • Basic parameter set(+UNFMCONF=1) o 10 (maximum number of CS registration attempts per defined time interval) o 1 (time interval in hours associated to CS registration attempts: 1 h) o 10 (maximum number of PS registration attempts per defined time interval: 10) o 1 (time interval in hours associated to PS registration attempts: 1 h) o 10 (maximum number of PDP context activation attempts per defined time interval: 10) o 1 (time interval in hours associated to PDP context activation attempts: 1 h)
+UNVMMCC	MCC update table	Empty table

AT command	Description	Factory-programmed value / Comment
+UNVMPLMN	PLMN info list	Empty table
+UOMADMREP	OMA-DM repository access	The contents of the leaf (terminal) node of the DM tree for the following ODIS nodes is as follows: • ./DevDetail/Ext/HostMan: "HMAN1" • ./DevDetail/Ext/HostMod: "HMOD1" • ./DevDetail/Ext/HostSwV: "HSW1" • ./DevDetail/Ext/HostID: "HUID1" • TOBY-R200-02B-00 / TOBY-R202-02B-00 / SARA-U201-03A / SARA-U201-03B / SARA-U201-03X / SARA-U201-63B : the default value for the above nodes is an empty string; furthermore, the "HostPlasmaID" node name is used in place of "HostID"
+UPSD	Packet switched data	Empty profile
+URAT	Selection of Radio Access Technology	• TOBY-L4 - 4 (GSM / UMTS / LTE RAT), 3 (LTE as preferred RAT) • TOBY-L2 / MPCI-L2 - 4 (GSM / UMTS / LTE RAT), 3 (LTE as preferred RAT) • TOBY-L201 / TOBY-L220 / MPCI-L201 / MPCI-L220 - 6 (UMTS / LTE RAT), 3 (LTE as preferred RAT) • TOBY-R200 - 4 (GSM / UMTS / LTE RAT), 3 (LTE as preferred RAT), 2 (UTRAN as second preferred RAT) • LARA-R202 / LARA-R280 / TOBY-R202 - 6 (UMTS / LTE RAT), 3 (LTE as preferred RAT) • LARA-R203 / LARA-R204 / LARA-R220 - 3 (LTE RAT) • LARA-R211 - 5 (GSM / LTE RAT), 3 (LTE as preferred RAT) • SARA-U2 / LISA-U2 / LISA-U1 - 1 (GSM/UMTS dual mode RAT), 2 (UMTS as preferred RAT) • SARA-U270-53S / SARA-U270-73S / SARA-U280 - 2 (UMTS RAT), 2 (UMTS as preferred RAT)
+URING	RING line handling	0 (feature disabled (RING line is only asserted on incoming call and incoming SMS))
+URNG	Ringing tone selection	0 (melody 0)
+URPM	RPM activation	0 (Radio Policy Manager deactivated)
+URPMCONF	Radio Policy Manager (RPM) configuration	<PLMN> empty, i.e. no PLMNs available
+URXDIV	RX diversity	1 (3G Rx Diversity disabled), 3 (DARP Phase 2 always on)
+USAFE	Speaker analog and digital gains	• <earpiece_gain>: 4 (corresponds to 0 dB gain) • <dac_coarse_gain>: 4 (corresponds to 0 dB gain) • <dac_fine_gain>: 3 (corresponds to 0 dB gain)
+USIMSTAT	(U)SIM initialization status reporting	0 (URC +UUSIMSTAT disabled)
+USIO	Serial interfaces configuration	• SARA-U201-04A / SARA-U201-04B / SARA-U201-04X / SARA-U270-04B - 0 (AT command on UART and USB, diagnostic log on USB, no AUX UART) • SARA-G340-02S / SARA-G340-02X / SARA-G350-02A / SARA-G350-02S / SARA-G350-02X - 1 (AT command on UART, diagnostic log on AUX UART, I2S can be used for DAI) • SARA-G4 - 1 (AT command on UART, diagnostic log on FT UART, I2S can be used for DAI)
+USOAO	Socket Always On	• 0,0 (Feature disable) • 1,0 (PSD profile: 0) • 2,0 (Client Mode) • 3,"" (Empty) • 4,2000 (Default port: 2000) • 5,6 (TCP socket) • 20+i,"" (Empty)
+USPM	Audio path mode setting	• TOBY-L4 - 0 (analog audio path), 0 (handset profile) • TOBY-L2 - 1 (speech audio output path: Downlink path 1 via I2S), 1 (speech audio input path: Uplink path 1 via I2S), 0 (alert sound on main downlink path (downlink path 1 via I2S)), 0 (Headset indication: not considered), 2 (VMIC is always switched Off)

AT command	Description	Factory-programmed value / Comment
		• LARA-R2 / TOBY-R2 / SARA-U2 / LISA-U2 - 1 (speech audio output path: Downlink path 1 via I2S), 1 (speech audio input path: Uplink path 1 via I2S), 0 (alert sound on main downlink path (Downlink path 1 via I2S)), 0 (headset indication: not considered), 2 (VMIC is always switched Off) • LISA-U1 - 1 (speech audio output path: Headset microphone), 1 (speech audio input path: Mono headset earpiece), 0 (alert sound on main downlink path (mono headset earpiece)), 0 (Headset indication: not considered), 2 (VMIC is always switched Off) • SARA-G340 / SARA-G350 - 0 (speech audio output path: Handset microphone), 0 (speech audio input path: Normal earpiece), 0 (alert sound on main downlink path (mono headset earpiece)), 0 (headset indication: not considered), 0 (VMIC is switched On /Off) • LEON-G1 - 0 (speech audio output path: Handset microphone), 0 (speech audio input path: Normal earpiece), 1 (alert sound on Loudspeaker), 1 (headset indication: considered), 0 (VMIC is switched On /Off)
+UUSBCONF	USB profiles configuration	• TOBY-L2 / MPCI-L2 - 3 (High throughput), "RNDIS" (USB network function) • SARA-U2 / LISA-U2 - 0 (7 CDC-ACM)
+UWAPCFG	Wireless access point physical layer configuration	• TOBY-L200-02S / TOBY-L200-03A / TOBY-L200-03S / TOBY-L201-02S - "UBXWifi" (ESSID), 2 (WPA2 authentication type), "ubx-wifi" (security passphrase), 1 (US country code), 0 (automatic channel selection), 3 (802.11b/g/n IEEE standard) • TOBY-L210-02S / TOBY-L210-03A / TOBY-L210-03S / TOBY-L210-62S / TOBY-L280 - "UBXWifi" (ESSID), 2 (WPA2 authentication type), "ubx-wifi" (security passphrase), 0 (EU country code), 0 (automatic channel selection), 3 (802.11b/g/n IEEE standard) • TOBY-L220 - "UBXWifi" (ESSID), 2 (WPA2 authentication type), "ubx-wifi" (security passphrase), 2 (JP country code), 0 (automatic channel selection), 3 (802.11b/g/n IEEE standard)
+UWAPIPCFG	Wireless access point network layer configuration	"192.168.2.1" (access point IP address), "255.255.255.0" (access point netmask), "192.168.2.100" (start IP address of the DHCP range), "192.168.2.200" (top IP address of the DHCP range)
+UWCFG	Wi-Fi module power mode	0 (Wi-Fi module is turned off), 0 (connection manager disabled), 0 (conflict reporting URC disabled)
+UWREGBLOCK	Wi-Fi regulatory domains block configuration	60 (Timer duration when the module enters in not registered state: 60 minutes)
+UWSTACFG	Wireless station physical layer configuration	0 (station mode disabled)
+UWSTAIPCFG	Wireless station network layer configuration	1 (connectivity within an external access point enabled), 1 (internal DHCP client to associate to the external access point enabled)
+UWWEBUI	Web user interface configuration	0 (web user interface disabled)
+UWWEBUIFTP	Web user interface customization through FTP service	0 (access to the Web user interface through FTP service is not allowed)
+VZWAPNE	Edit Verizon wireless APN table	Verizon wireless APN table (APN list entry, APN class, Network identifier, APN type, APN bearer, APN status, APN inactivity timer) • 1,1,"IMS","ipv4v6","LTE","Enabled",0 • 2,2,"VZWADMIN","ipv4v6","LTE","Enabled",0 • 3,3,"VZWINTERNET","ipv4v6","LTE","Enabled",0 • 4,4,"VZWAPP","ipv4v6","LTE","Enabled",0 • 6,6,"ENTERPRISE","ipv4v6","LTE","Enabled",0 • 7,7,"THINGSPACE","ipv4v6","LTE","Enabled",0 Class 1 APN in table above may differ from the one here specified. Refer to +VZWAPNE for details.
+XSIMSWITCH	SIM slot for switch operation	• TOBY-L4 - 0 (i.e. by default sim slot 1 is active)

B.3 Saving AT commands configuration

The following procedure can be used to store the AT commands configuration for the AT commands listed in Appendix B.1:

- TOBY-L2 / MPCI-L2 / LARA-R2 / TOBY-R2 / SARA-U2 / LISA-U2 / LISA-U1 / SARA-G4 / SARA-G3 / LEON-G1 - Write the run-time configuration of the AT commands listed in Appendix B.1 to the RAM profile mirror by means of the AT&W command (e.g. AT&W0)
- TOBY-L2 / MPCI-L2 / LARA-R2 / TOBY-R2 / SARA-U2 / LISA-U2 / LISA-U1 / SARA-G4 / SARA-G3 / LEON-G1 - Confirm that the boot loading is performed with the desired parameter profile (e.g. profile 0 if the parameter save was performed with AT&W0; use AT&Y0 to select this)

The following procedure can be used to store the AT commands configuration for the AT commands listed in Appendix B.2:

- TOBY-L4 / TOBY-L2 / MPCI-L2 / LARA-R2 / TOBY-R2 / SARA-U2 / LISA-U2 / LISA-U1 / SARA-G4 / SARA-G3 / LEON-G1 - Since the permanently saving of NVM content is achieved by a low priority process, the time depends on all the other activities as network procedures, call management, and so on. To be sure to save suddenly the run-time configuration of the commands listed in Appendix B.2, it is advisable to use +CPWROFF or +CFUN=15 or +CFUN=16. If the +CPWROFF has been issued the module, perform a reboot of the device

B.4 Estimated command response time

After having sent a command to a u-blox cellular module, the time to obtain a resulting result code depends on the SIM and the network. It is possible to have an immediate response if the command does not interact with either the network or the SIM.

The following table reports the maximum time to get the result code for the AT commands. The commands are grouped by categories.

Category	Estimated maximum time to get response	Commands
Power off	< 40 s	+CPWROFF
Set module functionality	Up to 3 min	+CFUN
Call control	< 20 s	A, H, +CHUP, +CSVM
Dial	Up to 3 min	D, D>, DL
DTMF and tone generation	Up to 7 min	+VTS
Supplementary services	< 20 s	+CAEMLPP, +CHLD, +CHUP, +CNAP, +COLP, +COLR
Supplementary services	Up to 3 min	+CCFC, +CCWA, +CLIP, +CLIR, +CTFR, +CUSD
Network commands	Up to 3 min	+CGATT, +CGDATA, +COPS, +UCGOPS, +UCSDA, +UPSDA
Operator name	Up to 1 s	+UDOPN
Cell information	< 5 s	+UCELLINFO
EONS names	< 40 s	+UEONS
Security	Up to 3 min	+CLCK, +CPWD
Phonebook commands	< 35 s	+CPBF, +CPBR, +CPBS, +CPBW
Delete all SMSes	< 55 s	+CMGD
SMS acknowledgement to MT	< 150 s	+CNMA
SMS	Up to 3 min (<1 s for prompt ">")	+CPMS, +CMGL, +CMSS, +CMGS, +UCMGS, +UCMGS3GPP2, +UCMGL
SIM management	< 10 s	+CACM, +CAMM, +CAOC, +CMGW, +UCMGW, +CMGR, +UCMGP, +UCMGR, +CNUM, +CPIN, +CPOL, +CPUC, +CR, +CRES, +CRSM, +CSCA, +CSCB, +CSMP
SIM switch	< 3 min	+XSIMSWITCH
SIM toolkit	< 20 s	+SATD, +SATE, +SATR, +STKENV, +STKTR, +UCATENV, +UCATTR, +URCATE, +URCATR
PDP context activation	< 150 s	+CGACT
PDP context deactivation	< 40 s	+CGACT
ECM data connection	Up to 3 min	+UCEDATA

Category	Estimated maximum time to get response	Commands
Restore configuration	< 5 s	+UFACTORY
OMA-DM alert	~400s (depending on network connectivity)	+UOMADMALERT
Audio path testing	< 2 s	+UMAAT
Audio recording	Up to 10 s	+URECFILE
GPIO commands	< 10 s	+UGPIOC, +UGPIOR, +UGPIOW
Internet suite (socket connect)	• TOBY-L2 / MPCI-L2 / LARA-R2 / TOBY-R2 / SARA-U2 / LISA-U2 / LISA-U1 / SARA-G4 / SARA-G3 / LEON-G1 - < 120 s	+USOCO
Internet suite (socket connect with SSL)	• TOBY-L2 / MPCI-L2 / LARA-R2 / TOBY-R2 / SARA-U2 / LISA-U2 / LISA-U1 / SARA-G4 / SARA-G3 / LEON-G1 - < 20 s	+USOSEC
Internet suite (socket write)	• LEON-G1 - < 10 s • TOBY-L2 / MPCI-L2 / LARA-R2 / TOBY-R2 / SARA-U2 / LISA-U2 / LISA-U1 / SARA-G4 / SARA-G3 / LEON-G1 - < 1 s	+USOWR
Internet suite (UDP socket write)	• LEON-G1 - < 10 s • TOBY-L2 / MPCI-L2 / LARA-R2 / TOBY-R2 / SARA-U2 / LISA-U2 / LISA-U1 / SARA-G4 / SARA-G3 / LEON-G1 - < 1 s	+USOST
Internet suite (socket closure)	• LEON-G1 - < 10 s • TOBY-L2 / MPCI-L2 / LARA-R2 / TOBY-R2 / SARA-U2 / LISA-U2 / LISA-U1 / SARA-G4 / SARA-G3 / LEON-G1 - < 1 s	+USOCL
Internet suite	• LEON-G1 - < 10 s • TOBY-L2 / MPCI-L2 / LARA-R2 / TOBY-R2 / SARA-U2 / LISA-U2 / LISA-U1 / SARA-G4 / SARA-G3 / LEON-G1 - < 1 s	+USMTPC, +USMTPM, +USODL, +USOLI, +USORD, +USORF
Resolve name/IP number through DNS	< 120 s (except URC)	+UDNSRN
GNSS commands	< 10 s (except +UGPS for which timeout is according to the performed operation)	+UGAOS, +UGGGA, +UGGLL, +UGGSA, +UGGSV, +UGPS, +UGRMC, +UGTMR, +UGUBX, +UGVTG, +UGZDA, +ULOC
Time information	< 10 s	+UTIME
Wi-Fi network scan	< 15 s	+UWSCAN
Wi-Fi configuration	< 20 s	+UWAPCFG, +UWCFG, +UWSTACFG
Last gasp configuration	< 10 s	+ULGASP
MNO configuration	< 3 min	+UMNOCONF
Firmware update		+UFWUPD

B.5 Multiple AT command interfaces

u-blox cellular modules support multiple AT command interfaces, that means a certain number of virtual or physical channels that work as described in Definitions.

Each interface maintains an own run-time AT commands configuration (AT command profile); this means that the AT command profile is different among the interfaces and therefore the AT commands configuration for the commands belonging to the profile can be different among the interfaces.

At the module start-up, since there is only a set of the profiles (not one for each interface), all the interfaces are configured in the same way (AT commands configuration for the commands in the profile is the same for all the interfaces). Subsequently, each interface can change its run-time AT profile (stored in RAM). The commands AT&W, AT&V manage this run-time AT commands configuration for the interface where they are issued.

The USB interface implements multiple AT command interfaces. Unlike what happens for the other physical interfaces (e.g. UART, SPI), the AT command interfaces that run on the USB interface only exists as long as the USB interface connects the module with the DTE. As a result, if the USB connection between the module and the DTE is interrupted (e.g. by USB cable removal), all the AT command interfaces running on it are destroyed. This has two main consequences:

- Any data connection (both circuit switched and packet switched) established over an AT command interface associated to the USB interface is released.
- As already explained in Appendix B.1, whenever the USB connection between the module and the DTE is re-established, the AT command interfaces running on it are created, and for each of these interfaces the AT command profile is reloaded from NVM and applied.

☞ The reload of the AT command profile from the NVM also results in the re-application of the +UPSV setting, which is a shared "AT interface configuration". This must be kept in mind, since the change could have impacts on the communication over the UART interface.

As mentioned in Definitions, generally there is not difference in the execution of an AT command among the interfaces. But, there are some exceptions due to interface restrictions. In particular, the differences relate to AT commands that configure the DCE-DTE interface.

Table 86 provides the major differences.

AT command	UART / AUX UART (where available)	Multiplexer	USB (where available)	SPI (where available)
&K	Effective	When it returns OK (the configuration is allowed), it is effective	When it returns OK (the configuration is allowed), it is not effective (only change the value in the AT command profile)	When it returns OK (the configuration is allowed), it is not effective (only change the value in the AT command profile)
\Q	Effective	When it returns OK (the configuration is allowed), it is effective	When it returns OK (the configuration is allowed), it is not effective (only change the value in the AT command profile)	When it returns OK (the configuration is allowed), it is not effective (only change the value in the AT command profile)
+ICF	Effective	Returns OK, but it is not effective (only change the value in the AT command profile)	Returns OK, but it is not effective (only change the value in the AT command profile)	Returns OK, but it is not effective (only change the value in the AT command profile)
+IFC	Effective	When it returns OK (the configuration is allowed), it is effective	When it returns OK (the configuration is allowed), it is not effective (only change the value in the AT command profile)	When it returns OK (the configuration is allowed), it is not effective (only change the value in the AT command profile)
+IPR	Effective	Returns OK, but it is not effective (only change the value in the AT command profile)	Returns OK, but it is not effective (only change the value in the AT command profile)	Returns OK, but it is not effective (only change the value in the AT command profile)
+UPSV	Effective	Returns OK, but it changes UART setting	Returns OK, but it changes UART setting	Returns OK, but it changes UART setting

Table 86: Interface comparison

C Appendix: UDP Direct Link workflow

C.1 Data from the IP network to the external port

When a UDP data packet is received from the network, its payload is forwarded through the external port as soon as possible (according to the HW flow control, if any).

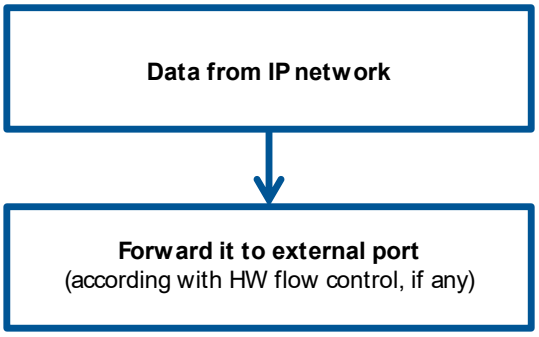

Figure 28: Workflow of data from the IP network to the external port

C.2 Data from the external port to the IP network

When some data comes from the external port, there are 2 parameters involved:

1. The UDP DL packet size (factory-programmed: 1024 bytes; valid range 100-1472)
2. The UDP DL sending timer delay (factory-programmed: 1000 ms; valid range 100-120000)

Both parameters are specific for each socket and could be modified by the user. These values are not saved into the NVM and if not specified, the factory-programmed values are used.

There are 3 different cases that may occur while receiving data from the external port in UDP DL mode:

1. The received data from the external port is equal to the UDP DL packet size: the received data is immediately sent to the network
2. The received data from the external port is more than the UDP DL packet size: the amount of data till UDP DL packet size is immediately sent to the network, the remaining data is saved into an intermediate buffer.
3. The received data from the external port is less than UDP DL packet size: the received data is saved into an intermediate buffer and sent to the network when the UDP DL sending timer expires. The timer is reset (it restarts the countdown) every time new data is received from the external port, this means that the data will be sent to the network after N ms (default 1000 ms) since the last received byte.

☞ The data sent from the serial port is not echoed to the sender.

☞ The configuration of UDP DL packet size and UDP DL sending timer are NOT saved in NVM.

The following diagram shows how the events of external data input and sending timer expire are handled.

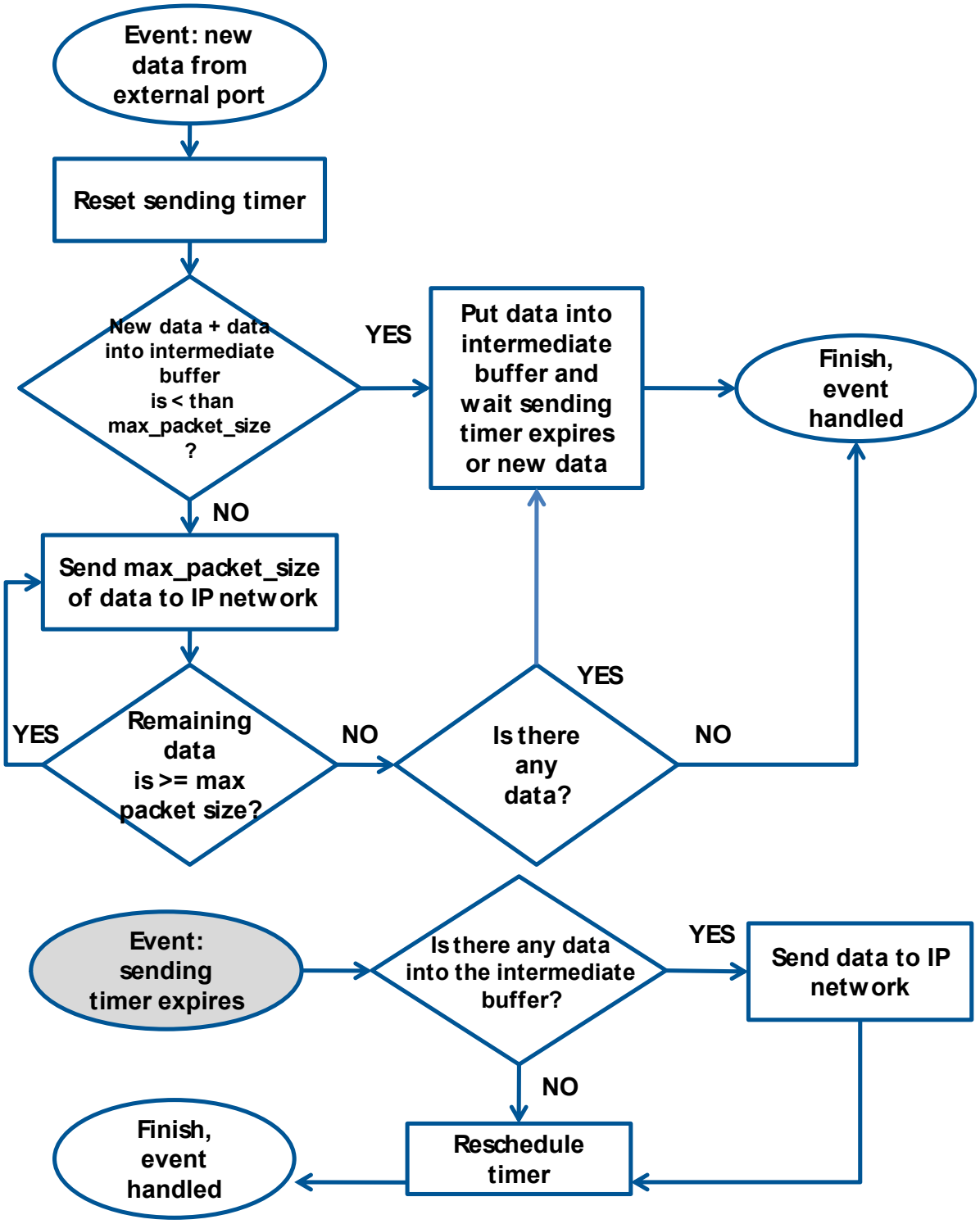

Figure 29: Workflow of data from the external port to the IP network

D Appendix: Glossary

2G	2nd Generation
3G	3rd Generation
3GPP	3rd Generation Partnership Project
ADC	Analog to Digital Converter
AIeC	Automatically Initiated eCall
ADN	Abbreviated Dialing Numbers
AMR	Adaptive Multi Rate
AP	Access Point
APN	Access Point Name
ASCII	American Standard Code for Information Interchange
AT	AT Command Interpreter Software Subsystem, or attention
BL	Black List
BSD	Berkley Standard Distribution
CB	Cell Broadcast
CBM	Cell Broadcast Message
CLI	Calling Line Identification
CLIP	Calling Line Identification Presentation
CLIR	Calling Line Identification Restriction
COLP	Connected Line Identification Presentation
COLR	Connected Line Identification Restriction
CM	Connection Management
CPHS	Common PCN Handset Specification
CR	Carriage Return
CS	Circuit Switch
CSD	Circuit-Switched Data
CSG	Closed Subscriber Group
CTS	Clear To Send
CUG	Closed User Group
DA	Destination Address
DARP	Downlink Advanced Receiver Performance
DCD	Data Carrier Detect
DCE	Data Communication Equipment
DCM	Data Connection Management
DHCP	Dynamic Host Configuration Protocol
DNS	Domain Name Server
DSR	DSC transponder response
DTE, TE	Data Terminal Equipment
DTMF	Dual Tone Multi Frequency
DTR	Data Terminal Ready
DUT	Device Under Test
EARFCN	E-UTRAN Absolute Radio Frequency Channel Number
eCall	Emergency Call
EEP	EEPROM Emulation Parameters
EF	Elementary File
EF_{CGST}	Elementary File "Closed Subscriber Group Type"
EF_{HNBN}	Elementary File "Home Node B Number"
$EF_{PLMNwAcT}$	Elementary File "User controlled PLMN Selector with Access Technology"
eIM	eCall In-band Modem
EONS	Enhanced Operator Name from SIM-files EF_{OPL} and EF_{PNN}
EPD	Escape Prompt Delay
ETSI	European Telecommunications Standards Institute
E-UTRAN/EUTRAN	Evolved UTRAN
FDN	Fixed Dialling Number

FOAT	Firmware Over AT
FOTA	Firmware Over The Air
FS	File System
FTP	File Transfer Protocol
FW	Firmware
FWINSTALL	Firmware Install
GAS	Grouping information Alpha String
GERAN	GSM/EDGE Radio Access Network
GPIO	General Purpose Input Output
GPRS	General Packet Radio Service
GPS	Global Positioning System
GSM	Global System for Mobile Communications
HDLC	High Level Data Link Control
HNB	Home Node B
HPLMN	Home PLMN
HTTP	HyperText Transfer Protocol
I	Information
I^2C	Inter-Integrated Circuit
I^2S	Inter IC Sound or Integrated Interchip Sound
ICCID	Integrated Circuit Card ID
ICMP	Internet Control Message Protocol
ICP	Inter Processor Communication
IMEI	International Mobile Equipment Identity
IMSI	International Mobile Station Identity
InBM	In-Band Modem (generic)
IP	Internet Protocol
IRA	International Reference Alphabet
IRC	Intermediate Result Code
ISDN	Integrated Services Digital Network
ISP	Internet Service Provider
IVS	In-Vehicle System (eCall related)
L3	Layer 3
LCP	Link Control Protocol
LF	Line Feed
LNS	Linux Network Subsystem
M2M	Machine-To-Machine
MCC	Mobile Country Code
ME	Mobile Equipment
MIeC	Manually Initiated eCall
MMI	Man Machine Interface
MN	Mobile Network Software Subsystem
MNC	Mobile Network Code
MNO	Mobile Network Operator
MO	Mobile Originated
MS	Mobile Station
MSD	Minimum Set of Data (eCall related)
MSIN	Mobile Subscriber Identification Number
MSISDN	Mobile Systems International Subscriber Identity Number
MSPR	Multi-Slot Power Reduction
MT	Mobile Terminated
MWI	Message Waiting Indication
NAA	Network Access Application
NAS	Non Access Stratum
NITZ	Network Identity and Time Zone
NVM	Non-Volatile Memory
ODIS	OMA-DM IMEI Sync

OLCM	On Line Commands Mode
PAD	Packet Assembler/Disassembler
P-CID	Physical Cell Id
PCN	Personal Communication Network
PDP	Packet Data Protocol
PDU	Protocol Data Unit
PIN	Personal Identification Number
PLMN	Public Land Mobile Network
PPP	Point-to-Point Protocol
PSAP	Public Safety Answering Point (eCall related)
PSD	Packet-Switched Data
PUK	Personal Unblocking Key
QoS	Quality of Service
RAM	Random Access Memory
RDI	Restricted Digital Information
RFU	Reserved for Future Use
RNDIS	Remote Network Driver Interface Specification
RI	Ring Indicator
RTC	Real Time Clock
RTP	Real-time Transport Protocol
RTS	Request To Send
Rx	Receiver
SAP	SIM Access Profile
SC	Service Centre
SI	SIM Application Part Software Subsystem
SIP	Session Initiation Protocol
SIM	Subscriber Identity Module
SMS	Short Message Service
SMSC	Short Message Service Center
SMTP	Simple Mail Transfer Protocol
SoR	Steering of Roaming
SDIO	Secure Digital Input Output
SES	Speech Enhancement System
STA	station
SSID	Service Set Identifier
TA	Terminal Adaptor
TCP	Transfer Control Protocol
TE	Terminal Equipment
TFT	Traffic Flow Template
TP	Transfer layer Protocol
Tx	Transmitter
TZ	Time Zone
UCS2	Universal Character Set
UDI	Unrestricted Digital Information
UDP	User Datagram Protocol
UI	Unnumbered Information
UICC	Universal Integrated Circuit Card
UIH	Unnumbered Information with header Check
URC	Unsolicited Result Code
USIM	UMTS Subscriber Identity Module
UTRAN	Universal Terrestrial Radio Access Network
UUS1	User-to-User Signalling Supplementary Service 1
WLAN	Wireless Local Area Network

Related documents

1. Stevens. TCP/IP Illustrated Volume1 & 2 Addison-Wesley, 1994.
2. 3GPP TS 27.007 - Technical Specification Group Core Network and Terminals; AT command set for User Equipment (UE)
3. 3GPP TS 22.004 - General on supplementary services
4. GSM 02.04 - Digital cellular telecommunication system (Phase 2+); Mobile Stations (MS) features
5. 3GPP TS 22.030 - Digital cellular telecommunications system (Phase 2+); Universal Mobile Telecommunications System (UMTS); Man-Machine Interface (MMI) of the User Equipment (UE)
6. 3GPP TS 22.090 - Unstructured Supplementary Service Data (USSD); Stage 1
7. 3GPP TS 23.038 - Alphabets and language-specific information
8. 3GPP TS 23.040 - Technical realization of Short Message Service (SMS)
9. 3GPP TS 23.041 - Technical realization of Cell Broadcast Service (CBS)
10. 3GPP TS 23.060 - Technical Specification Group Services and System Aspects; General Packet Radio Service (GPRS); Service description
11. 3GPP TS 24.007 - Mobile radio interface signalling layer 3; General aspects
12. 3GPP TS 24.008 - Mobile radio interface layer 3 specification
13. 3GPP TS 24.011 - Point-to-point (PP) Short Message Service (SMS) support on mobile radio interface
14. GSM 04.12 - Digital cellular telecommunications system (Phase 2+); Short Message Service Cell Broadcast (SMSCB) Support on Mobile Radio Interface.
15. 3GPP TS 22.030 - Digital cellular telecommunications system (Phase 2+); Universal Mobile Telecommunications System (UMTS); Man-Machine Interface (MMI) of the User Equipment (UE)
16. 3GPP TS 27.005 - Technical Specification Group Terminals; Use of Data Terminal Equipment - Data Circuit terminating Equipment (DTE-DCE) interface for Short Message Services (SMS) and Cell Broadcast Service (CBS)
17. 3GPP TS 27.060 - Technical Specification Group Core Network; Packet Domain; Mobile Station (MS) supporting Packet Switched Services
18. 3GPP TS 51.011 - Digital cellular telecommunications system (Phase 2+); Specification of the Subscriber Identity Module - Mobile Equipment (SIM - ME) interface
19. 3GPP TS 31.102 - Characteristics of the Universal Subscriber Identity Module (USIM) application
20. ITU-T Recommendation V250, 05-99.
21. ITU-T V.25ter - ITU-T V.25 ter Recommendation: Data Communications over the Telephone Network; Serial asynchronous automatic Dialling and control.
22. ITU-T T.32 - ITU-T Recommendation T.32 Asynchronous Facsimile DCE Control - Service Class 2
23. ISO 639 (1988) Code for the representation of names of languages
24. LEON-G1 series Data Sheet, Docu No UBX-13004887
25. LEON-G1 series System Integration Manual, Docu No UBX-13004888
26. ITU-T Recommendation V24, 02-2000. List of definitions for interchange circuits between Data Terminal Equipment (DTE) and Data Connection Equipment (DCE).
27. RFC 791 - Internet Protocol - http://www.ietf.org/rfc/rfc791.txt
28. 3GPP TS 05.08 - Radio subsystem link control
29. 3GPP TS 22.087 - User-to-User Signalling (UUS)
30. 3GPP TS 24.008 - Mobile radio interface layer 3 specification
31. 3GPP TS 22.022 - Personalisation of Mobile Equipment (ME)
32. 3GPP TS 22.082 - Call Forwarding (CF) supplementary services
33. 3GPP TS 22.083 - Call Waiting (CW) and Call Holding (HOLD)
34. 3GPP TS 22.081 - Line identification Supplementary Services- Stage 1
35. 3GPP TS 23.081 - Line identification supplementary services- Stage 2
36. 3GPP TS 22.086 - Advice of Charge (AoC) Supplementary Services
37. 3GPP TS 22.024 - Description of Charge Advice Information (CAI)
38. 3GPP TS 22.085 - Closed User Group (CUG) Supplementary Services
39. 3GPP TS 22.096 - Name identification supplementary services
40. 3GPP TS 04.18 - Mobile radio interface layer 3 specification; Radio Resource Control (RRC) protocol

41. GSM 04.60 - Digital cellular telecommunications system (Phase 2+); General Packet Radio Service (GPRS); Mobile Station (MS) - Base Station System (BSS) interface; Radio Link Control / Medium Access Control (RLC/MAC) protocol
42. 3GPP TS 05.02 - Multiplexing and Multiple Access on the Radio Path
43. EVK-G25H Evaluation Kit User Guide, Docu No GSM.G1-EK-09022
44. 3GPP TS 51.014 - Specification of the SIM Application Toolkit for the Subscriber Identity Module - Mobile Equipment (SIM - ME) interface
45. u-blox 5/6 Receiver Description including Protocol Specification, Docu. No GPS-SW-09017
46. 3GPP TS 27.010 V3.4.0 - Terminal Equipment to User Equipment (TE-UE) multiplexer protocol (Release 1999)
47. LEON-G1 Audio Application Note, Docu No GSM.G1-CS-10005
48. EVK-U12 EVK-U13 User Guide, Docu No 3G.G2-EK-10010
49. LISA-U1 / LISA-U2 series System Integration Manual, Docu No UBX-13001118
50. 3GPP TS 22.060 - General Packet Radio Service (GPRS); Service description; Stage 1
51. ETSI TS 102 223 - Smart cards; Card Application Toolkit (CAT)
52. GNSS Implementation Application Note, Docu No UBX-13001849
53. 3GPP TS 25.306 - UE Radio Access capabilities
54. RFC3267 - Real-Time Transport Protocol (RTP) Payload Format and File Storage Format for the Adaptive Multi-Rate (AMR) and Adaptive Multi-Rate Wideband (AMR-WB) Audio Codecs
55. EVK-G20 Evaluation Kit User Guide, Docu No GSM.G1-EK-11002
56. LISA-U1 series Data Sheet, Docu No UBX-13002048
57. RFC 792 Internet Control Message Protocol (http://tools.ietf.org/html/rfc0792)
58. 3GPP TS 22.002 - Circuit Bearer Services (BS) supported by a Public Land Mobile Network (PLMN)
59. 3GPP TS 22.067 - enhanced Multi Level Precedence and Pre-emption service (eMLPP); Stage 1
60. LISA-U2 series Data Sheet, Docu No UBX-13001734
61. AT&T: Device Requirements -- Requirements Document -- Document Number 13340 -- Revision 4.6 -- Revision Date 9/2/11
62. 3GPP TS 23.972 - Circuit switched multimedia telephony
63. 3GPP TS 24.615 Communication Waiting (CW) using IP Multimedia (IM) Core Network (CN) subsystem; Protocol Specification
64. 3GPP TS 25.101 - User Equipment (UE) radio transmission and reception (FDD)
65. 3GPP TS 45.005 - Radio transmission and reception
66. Common PCN Handset Specification v4.2
67. SIM Access Profile - Interoperability Specification - Bluetooth Specification V11r00
68. EVK-U20 EVK-U23 User Guide, Docu No UBX-13001794
69. Maxim MAX9860 16-Bit Mono Audio Voice Codec datasheet, 19-4349; Rev 1; 9/09. Available from the Maxim website (http://datasheets.maxim-ic.com/en/ds/MAX9860.pdf)
70. 3GPP TS 23.122 - NAS Functions related to Mobile Station (MS) in idle mode
71. ETSI TS 122 101 V8.7.0 (2008-01) Service aspects; Service principles (3GPP TS 22.101 version 8.7.0 Release 8)
72. BS EN 16062:2015 Intelligent transport systems - ESafety - eCall high level application requirements (HLAP) using GSM/UMTS circuit switched networks, April 2015
73. 3GPP TS 26.267 V12.0.0 (2012-12) eCall Data Transfer; In-band modem solution; General description (Release 12)
74. 3GPP TS 51.010-1 Mobile Station (MS) conformance specification; Part 1: Conformance specification
75. RFC 959 File Transfer Protocol (http://tools.ietf.org/html/rfc959)
76. RFC 2428 FTP Extensions for IPv6 and NATs (https://tools.ietf.org/html/rfc2428)
77. SARA-G3 Audio Application Note, Docu No UBX-13001793
78. LISA-U1 / LISA-U2 Audio Application Note, Docu No UBX-13001835
79. 3GPP TS 23.014 Support of Dual Tone Multi-Frequency (DTMF) signalling V11.0.0 (2012-09)
80. EVK-G35 Evaluation Kit User Guide, Docu No UBX-13001792
81. SARA-G3 Series Data Sheet, Docu No UBX-13000993
82. SARA-G3 / SARA-U2 Series System Integration Manual, Docu No UBX-13000995
83. ETSI TS 127 007 V10.3.0 (2011-04) AT command set for User Equipment (UE) (3GPP TS 27.007 version 10.3.0 Release 10)

84. 3GPP TS 51.010-2 Mobile Station (MS) conformance specification; Part 2: Protocol Implementation Conformance Statement (PICS) proforma specification

85. 3GPP TS 34.121-2 User Equipment (UE) conformance specification; Radio transmission and reception (FDD); Part 2: Implementation Conformance Statement (ICS)

86. u-blox Firmware Update Application Note, Docu No UBX-13001845

87. PCCA standard - Command set extensions for CDPD modems, Revision 2.0, March, 1998

88. 3GPP TS 24.301 Non-Access-Stratum (NAS) protocol for Evolved Packet System (EPS); Stage 3

89. 3GPP TS 44.060 General Packet Radio Service (GPRS); Mobile Station (MS) - Base Station System (BSS) interface; Radio Link Control / Medium Access Control (RLC/MAC) protocol

90. 3GPP TS 23.221 Architectural requirements

91. 3GPP TS 23.203 Policy and charging control architecture

92. 3GPP TS 31.101 UICC-terminal interface; Physical and logical characteristics

93. ETSI TS 102 221 V8.2.0 (2009-06) Smart Cards; UICC-Terminal interface; Physical and logical characteristics (Release 8)

94. RFC 4291 - IP Version 6 Addressing Architecture (http://tools.ietf.org/html/rfc4291)

95. 3GPP TS 25.305 User Equipment (UE) positioning in Universal Terrestrial Radio Access Network (UTRAN); Stage 2

96. 3GPP TS 23.032: Universal Geographical Area Description (GAD)

97. TOBY-L2 series Networking Modes Application Note, Docu No UBX-14000479

98. 3GPP TS 25.331 Radio Resource Control (RRC); Protocol specification

99. 3GPP TS 36.101 Evolved Universal Terrestrial Radio Access (E-UTRA); User Equipment (UE) radio transmission and reception

100. Wi-Fi / Cellular Integration Application Note, Docu No UBX-14003264

101. 3GPP TS 24.173 IMS Multimedia telephony communication service and supplementary services; Stage 3

102. 3GPP TS 24.341 Support of SMS over IP networks; Stage 3

103. 3GPP TS 24.229 IP multimedia call control protocol based on Session Initiation Protocol (SIP) and Session Description Protocol (SDP); Stage 3

104. 3GPP TS 36.306 Evolved Universal Terrestrial Radio Access (E-UTRA); User Equipment (UE) radio access capabilities

105. 3GPP TS 36.133 Evolved Universal Terrestrial Radio Access (E-UTRA); Requirements for support of radio resource management

106. 3GPP TS 25.133 Requirements for support of radio resource management (FDD)

107. 3GPP TS 22.071 Location Services (LCS); Service description

108. IEC 61162 Digital interfaces for navigational equipment within a ship

109. 3GPP TS 36.331 Evolved Universal Terrestrial Radio Access (E-UTRA); Radio Resource Control (RRC); Protocol specification (Release 10)

110. 3GPP TS 24.167 3GPP IMS Management Object (MO); Stage 3

111. ITU-T E.212 - Series E: Overall network operation, telephone service, service operation and human factors

112. RFC 793 - Transmission Control Protocol (TCP) Protocol Specification (https://www.rfc-editor.org/rfc/rfc793.txt)

113. 3GPP TS 26.201 Speech codec speech processing functions; Adaptive Multi-Rate - Wideband (AMR-WB) speech codec; Frame structure

114. 3GPP TS 24.216 Communication Continuity Management Object (MO)

115. 3GPP TS 36.521-2 - Evolved Universal Terrestrial Radio Access (E-UTRA); User Equipment conformance specification; Radio transmission and reception; Part 2: Implementation Conformance Statement (ICS)

116. 3GPP TS 36.523-2 - Evolved Universal Terrestrial Radio Access (E-UTRA) and Evolved Packet Core (EPC); User Equipment conformance specification; Part 2: Implementation Conformance Statement (ICS)

117. 3GPP TS 23.003 Numbering, addressing and identification

118. TOBY-L2 series Audio Application Note, Docu No UBX-15015834

119. 3GPP TS 31.111 Universal Subscriber Identity Module (USIM) Application Toolkit (USAT)

120. RFC 3969 - The Internet Assigned Number Authority (IANA) Uniform Resource Identifier (URI) Parameter Registry for the Session Initiation Protocol (SIP)

121. RFC 3261 - SIP: Session Initiation Protocol

122. RFC 5341 - The Internet Assigned Number Authority (IANA) tel Uniform Resource Identifier (URI) Parameter Registry

123. RFC 3966 - The tel URI for Telephone Numbers
124. RFC 2141 - URN Syntax
125. RFC 3406 - Uniform Resource Names (URN) Namespace Definition Mechanisms
126. RFC 5031 - A Uniform Resource Name (URN) for Emergency and Other Well-Known Services
127. 3GPP TS 22.084 MultiParty (MPTY) supplementary service; Stage 1
128. 3GPP TS 24.607 Originating Identification Presentation (OIP) and Originating Identification Restriction (OIR) using IP Multimedia (IM) Core Network (CN) subsystem; Protocol specification
129. 3GPP TS 24.608 Terminating Identification Presentation (TIP) and Terminating Identification Restriction (TIR) using IP Multimedia (IM) Core Network (CN) subsystem; Protocol specification
130. 3GPP TS 36.213 Evolved Universal Terrestrial Radio Access (E-UTRA); Physical layer procedures
131. 3GPP TS 36.212 Evolved Universal Terrestrial Radio Access (E-UTRA); Multiplexing and channel coding
132. RFC 4715 - The Integrated Services Digital Network (ISDN) Subaddress Encoding Type for tel URI
133. End User Test Application Note, Docu No UBX-13001922
134. OMA Device Management V1.2.1 (http://technical.openmobilealliance.org/Technical/technical-information/release-program/current-releases/dm-v1-2-1)
135. RFC 5626 - Managing Client-Initiated Connections in the Session Initiation Protocol (SIP)
136. 3GPP TS 24.166 - 3GPP IP Multimedia Subsystem (IMS) conferencing Management Object (MO)
137. 3GPP TS 29.061 - Interworking between the Public Land Mobile Network (PLMN) supporting packet based services and Packet Data Networks (PDN)
138. 3GPP TS 24.303 - Mobility management based on Dual-Stack Mobile IPv6; Stage 3
139. 3GPP TS 24.327 - Mobility between 3GPP Wireless Local Area Network (WLAN) interworking (I-WLAN) and 3GPP systems; General Packet Radio System (GPRS) and 3GPP I-WLAN aspects; Stage 3
140. 3GPP TS 25.367 - Mobility procedures for Home Node B (HNB); Overall description; Stage 2
141. 3GPP TS 25.304 - User Equipment (UE) procedures in idle mode and procedures for cell reselection in connected mode
142. 3GPP TS 36.304 - Evolved Universal Terrestrial Radio Access (E-UTRA); User Equipment (UE) procedures in idle mode
143. RFC 4867 - RTP Payload Format and File Storage Format for the Adaptive Multi-Rate (AMR) and Adaptive Multi-Rate Wideband (AMR-WB) Audio Codecs
144. RFC 4733 - RTP Payload for DTMF Digits, Telephony Tones, and Telephony Signals
145. 3GPP2 C.S0015-0 - Short Message Service
146. RFC 1518 - An Architecture for IP Address Allocation with CIDR (https://tools.ietf.org/html/rfc1518)
147. RFC 1519 - Classless Inter-Domain Routing (CIDR): an Address Assignment and Aggregation Strategy (https://tools.ietf.org/html/rfc1519)
148. 3GPP TS 45.008 - GSM/EDGE Radio Access Network; Radio subsystem link control
149. 3GPP TS 25.401 - Universal Mobile Telecommunications System (UMTS); UTRAN Overall Description
150. GSM 04.08 - Digital cellular telecommunications system (Phase 2+); Mobile radio interface layer 3 specification
151. 3GPP TS 24.237 - Technical Specification Group Core Network and Terminals; IP Multimedia (IM) Core Network (CN) subsystem IP Multimedia Subsystem (IMS) Service Continuity; Stage 3
152. 3GPP TS 36.211 - Evolved Universal Terrestrial Radio Access (E-UTRA); Physical channels and modulation
153. 3GPP TS 23.682 - Architecture enhancements to facilitate communications with packet data networks and applications
154. 3GPP TS 23.401 - General Packet Radio Service (GPRS) enhancements for Evolved Universal Terrestrial Radio Access Network (E-UTRAN) access
155. GSMA TS.34 - IoT Device Connection Efficiency Guidelines
156. SARA-U2 series Audio Extended Tuning Application Note, Docu No UBX-17012797
157. NB-IoT Application Development Guide, Docu No UBX-16017368
158. SARA-N2 Series Data Sheet, Docu No UBX-15025564
159. SARA-N3 Series Data Sheet, Docu No UBX-18066692
160. RFC 7252 - Constrained Application Protocol (CoAP)
161. Open Mobile Alliance (OMA) SyncML Common Specification, Version 1.2.2 (http://www.openmobilealliance.org/release/Common)
162. SARA-U2 Audio Application Note, Docu No UBX-14002981

163. MQTT Version 3.1.1 - OASIS Standard
164. MQTT-SN Protocol Specification Version 1.2
165. 3GPP TS 44.018 - Mobile radio interface layer 3 specification; GSM/EDGE Radio Resource Control (RRC) protocol
166. 3GPP TS 43.064 - General Packet Radio Service (GPRS); Overall description of the GPRS radio interface; Stage 2

☞ For regular updates to u-blox documentation and to receive product change notifications, register on our homepage.

Revision history

Revision	Date	Name	Comments
-	30-Apr-2011	tgri	Initial release
P1	06-May-2011	lpah	Changed the title, removed "2G and 3.75G"
1	11-May-2011	lpah	New commands for LEON-06x supported
2	26-May-2011	lpah	Improvement for GPS and GPIO AT commands
3	07-Jul-2011	lpah	Changed status to Preliminary; Assistnow online and offline description in +ULOCGNSS corrected
A	14-Oct-2011	lpah	Applicable to LISA-U1x0-01S and LISA-U200-00S New commands for STK raw mode and +PACSP
A1	05-Dec-2011	mtom / lpah	Changed status to Advance Information Improved the +UVTS command syntax and the primary and secondary PDP contexts description +CGDCONT setting stored in non volatile memory New settings for the FW update over AT commands Added number of allowed SIM locks
A2	03-Feb-2012	mtom / lpah	Changed status to Preliminary
B	18-May-2012	mtom / lpah	Changed status to Objective Specification status Extended audio AT commands for LISA-U200-01 and LISA-U230-01 New commands: +UCMGP, +UMCLK, +URXDIV, +UMWI I2C and SAP Extended applicability to LEON-G100-07
B1	31-Jul-2012	mtom	Changed status to Preliminary; added +UEXTDCONF command description and one shot automatic baud rate detection description
B2	10-Oct-2012	lpah	Changed status to Advance Information; applicable to LISA-U260 and LISA-U270
B3	13-Dec-2012	lpah	Changed status to Preliminary; applicable to LEON-G100-08S and LEON-G100-71S
C	26-Mar-2013	lpah	Changed status to Advance Information; applicable to SARA-G350-00S and SARA-G350-71S New AT commands: +UDYNDNS, +UAEC, +UAGC, +UIPCHGN, +USER, +USOAO, +UTPB
C1	17-Apr-2013	lpah	Changed status to Preliminary
C2	06-Jun-2013	lpah	Changed status to Objective Specification; applicability extended to SARA-G300-01S, SARA-G310-01S and LISA-U2x0-02S
C3	04-Jul-2013	lpah	Changed status to Advance Information (Last revision with old doc number, WLS-SW-11000)
D	30-Jul-2013	lpah	Changed status to Preliminary
D1	13-Sep-2013	lpah	Added LEON-G100-71S FW version for Initial Production SIM detection not supported by SARA-G300 / SARA-G31310 modules Removed +UAEC, +UAGC, +USER AT commands
R19	29-Nov-2013	lpah	Extended the document applicability to new products New commands: +UFWINSTALL Updated +UCELLLOCK applicability Improved description on +UHFP for SARA-G350 and the eCall command description Added note on +COPS command description for LISA-U1 / LISA-U2 series
R20	23-Jan-2014	lpah	Document applicable to LEON only for LEON-G100-06S-02, LEON-G100-07S-01 and LEON-G100-08S-01 New commands: +CECALL, +CECALL Modified commands: +CSQ, +COPS and +CGED
R21	10-Apr-2014	lpah	Document applicable to SARA-U260 / SARA-U270 / SARA-G340 products New layout for the command description

Revision	Date	Name	Comments
			Reviewed the contents of the sections. Introduced these new sections: SIM management, Audio interface Split the +UDCONF command description for each supported functionality New commands: +CECALL, +UDCONF=66, +UGSRV Modified commands: +UGPRF, +UDCONF=30, +USPM, +USMTP, +UHSDUPA, +UHTTPC, +UDTMFD, +UGAOF, +UGAOP, +UGAOS, +UGGGA, +UGGLL, +UGGSA, +UGGSV, +UGPS, +UGRMC, +UGTMR, +UGUBX, +UGVTG, +UGZDA, +ULOC, +ULOCCELL, +ULOCGNSS, +CGED, +CRLP, +UDCONF=40, +UDCONF=20 Updated estimated response time information for these commands: +CAOC, +CGANS, +CGCLASS, +CGCMOD, +CMGL, +CMGR, +CMGW, +CPMS, +CR, +CSCA, +CSCB, +CSMP, +CSVM, +SATD, +SATE, +SATR, +STKPRO, +UCMGL, +UCMGR, +UCMGP, +UCMGS, +UCMGW, +UDNSRN, +UDYNDNS, +UFRW, +UFTPER, +UGAOP, +UGPRF, +UIPCHGN, +ULOCCELL, +ULOCGNSS, +UPSDA, +USMTP, +USMTPER, +USOAO, +USOCO, +USOCR, +USOCTL, +USOER, +USOGO, +USOSO, +VTS, D*, D>, DL, Z, +UCELLINFO, +UEONS
R22	23-Jun-2014	Ipah	Modified commands: +UCELLLOCK, GPRS definition, +USPM, GPIO Introduction, +UDWNFILE, +UFTPC, +UFTP, +UHTTPC, +UHTTP, +CPBS, +USOGO, +USOSO, +CSVM, +CGPERMSTATE, +UFWUPD, +UI2S, +CGDCONT, +UI2CO, +UPSDA, +UEXTDCONF, +UMCLK, +USOAO, +USOAO, +UGIND, +UGIND, +UGPS, +UGAOF, +UGAOF, +UGAOP, +UGAOP, +UGAOS, +UGAOS, Multiple AT command interfaces Extended the command description: +CMUX, +UFTP, HTTP errors, +UPSD, +UDCONF=8, +D, +UPING, +UFTPC, +UCELLINFO, +USOST, +UDCONF=40, +UGPRF, I, +UGSRV, Multiple AT command interfaces, +CGDCONT, +UDCONF=30, +ICF, +IPR, +UTPB, +UPSV, +UGPIOC, +ULSTFILE, +CBST, +UUFTPCD, +UBANDSEL, +UHSDUPA, +STKTR, +CIND AT commands Review the command applicability for these commands: +UDCONF=2, +UDCONF=3, +UDCONF=20, +UDCONF=40, +UDCONF=30, +UDCONF=81, +UGPS, +UGIND, +UGPRF, +UGAOP, +UGAOF, +UGSRV, +UGAOS, +UGUBX, +UGTMR, +UGZDA, +UGGGA, +UGGLL, +UGGSV, +UGRMC, +UGVTG, +UGGSA, +ULOC, +ULOCGNSS, +ULOCCELL, +COPS, +USOAO, +UDBF, +UHFP, +UMGC, +USGC, +USTN, +UUBF, +UI2S, +UPAR, +UPLAYFILE, +USAR, +USPM, +USTOPFILE, +UTGN, +UGPIOC, +UDCONF=30
R23	21-Jul-2014	Ipah	Modified commands: CME error result codes, Multiple AT command interfaces, Audio, +UDCONF=30, +UPAR, +UTGN, H, +CHUP, +UDCONF=32, +UDCONF=31, +UDCONF=90, FTP, +CSCS, +CGCLASS, +CGREG, +UCGCLASS, +UPSD, +UGAOF, +UGAOP, +UGGSV, +UGIND, +UGPRF, +UGPS, +UGSRV, +UGTMR, +ULOCCELL, +ULOCGNSS, +CPOL, +UCD, +UCELLLOCK, +UDCONF=20, +UDCONF=61, +UDCONF=81, +WS46, PING, +UDCONF=4, +UPING, +STKPRO, +CSIM, +UDCONF=50, +CNMA, +UCMGP, +UANTR, +UDCONF=0, +UDCONF=40, +UDCONF=66, +UFWUPD, +CALM, +UDCONF=1, +UDCONF=2, +UDCONF=3, +UDCONF=5, +UDCONF=6, +UDCONF=7, +UDCONF=8, +USODL, Z Extended the command description: GPIO, +URDBLOCK, +CRC, +CRLP, +FCLASS, PPP, +UDCONF=0, +UPSD, +CGTFT, GPRS, SMS, +STKTR, SMS error result codes, +UTEST, +CGED, +CGDSCONT, +CGQMIN, +CGQREQ AT commands Updated estimated response time information for this command: +UDOPN Review the command applicability for this command: +UDCONF=90
R24	18-Sep-2014	Ipah	Extended the document applicability to TOBY-L2 / MPCI-L2 products starting from UBX-14000245-R03 New commands: +CCHC, +CCHO, +CGLA, +CRLA, +CGPIAF, +CUAD, +CESQ, +UCSDETACH, +CPNER, +UCATPROF, +UCATPROI, +UCATPRON, +UCATTR, +UCATCNF, +UCATENV, +UCATCC, +URCATI, +URCATN, +URCATR, +URCATF, +URCATCC, +UCGATT, +CEMODE,

Revision	Date	Name	Comments
			+CEREG, +CGDEL, +CGTFTRDP, +UAUTHREQ, +UTGSINK, +CGEQOS, +CGEQOSRDP, +CGSCONTRDP, +CEUS, +CGCONTRDP, +UCGDFLT, +UDCONF=9, +UCGED, +UDCONF=60, +UUSBCONF, +UIPADDR, +UIPCONF, +UIPROUTE, +UIPTABLES, +UBMCONF, +UDPDP Modified commands: +CFUN, +CALA, +CCLK, +COPS, +WS46, +CPWD, +CPBW, +CSCB, +CPMS, +CNMA, +FCLASS, +UCSP, +CUSD, +CGACT, D*, +UPSD, +CGTFT, +CGTFTRDP, +UTEST, +UI2S, +UEXTDCONF, +UHTTPC, +UFTPC Review the command applicability for these commands: +UCELLLOCK, +CGED, +UDATACHANNEL, +CGANS, +CGAUTO
R25	17-Nov-2014	Ipah	New command: +UDCONF=67 Modified commands: D, DL, D>, +CFUN, +CALA, +CIND, +CMER, +CPOL, +URAT, +UCGOPS, +CSQ, +CREG, +COPS, +CESQ, +UHOMEZR, +UCELLLOCK, +CPLS, +UCGED, +CLCK, +CPBS, SMS introduction, +CPMS, +CMGR, +CMGW, +CMGS, +CMGL, +CSMP, +UCMGR, +CUSD, &C, &D, V, &V, +CGLA, +CRLA, +CCHO, +CUAD, +CCHC, +STKCNF, +CGDCONT, <APN>, +CEMODE, +UCGATT, D*, +UCGDFLT, +CGREG, +UREG, +UTEST, +UFWUPD, +UUSBCONF, +UPSV, GPIO Introduction
R26	23-Jan-2015	Ipah	Extended the document applicability to TOBY-L200-50S / TOBY-L200-50 S products version New command: +UWAPIPCFG, +UWAPCFG, +UWCFG, +UWTEST, +UWAPSTALIST, +UWSTAIPCFG, +UWSTACFG, +UWFWRESET, +UWAPMACADDR, +UWMP, +UWSCAN, +UWWEBUI Modified commands: +CSQ, +UTEST, +CMUX, &K, +ICF, +IFC, \Q, +UPSV, +IPR, +UUSBCONF, O, S2, S12, &C, &D, +UDNSRN
R27	27-Feb-2015	Ipah	Extended the document applicability to SARA-U270-00X and SARA-U280 -00S product versions Modified commands: +CMUX, +CGSN, +CSNS, +UBANDSEL, +CGED, +URAT, +UHSDUPA, +CREG, +UCELLLOCK, +UCSDETACH, +COPS, +UDCONF=20, +UCGOPS, +CLCK, +CNMI, +CLCC, O, S2, S12, &C, &D, +IPR, +ICF, +IFC, &K, \Q, <PDP_Type>, +UPSD, +UPSDA, +UPSND, +UCGDFLT, +UAUTHREQ, +CRSM, +STKTR, +STKPRO, +STKCNF, +UFWINSTALL, +UFWUPD, +UPSV, +UTEST, +URXDIV, +UDYNDNS, +UDWNFILE, +ULSTFILE, +URDFILE, +URDBLOCK, +UDELFILE, +UI2S, +UWAPCFG, +UWCFG, +UWTEST, +UWSTAIPCFG, +UWAPMACADDR, +UWWEBUI Review the command applicability for these commands: +CMUX, +UCALLSTAT, +UCSD, +UCSDA, +UCSND, +UPSV, &K, &S, \Q, +SATF, +SATI, +SATN, +UDELFILE, +UDWNFILE, +ULSTFILE, +URDBLOCK, +URDFILE
R28	08-Jun-2015	Ipah	Extended the document applicability to TOBY-L201-01S and TOBY-L280-00S product versions New commands: +CASIMS, +CIREG, +UIMSCONF, +UIMSRCONF, +UMNOCONF, +UMNOPLMN, +ULTECAT, +UANT Modified commands: +CALA, +CTZR, +CREG, +COPS, +UBANDSEL, +UCGED, +CMGR, +IPR, +CSIM, +STKPRO, +STKTR, +STKCNF, +STKENV, +SATE, +UCATTR, +UCATPROI, <PDP_addr>, +CGREG, +UAUTHREQ, +UPSDA, +UDELFILE, +UDWNFILE, +ULSTFILE, +URDBLOCK, +URDFILE, +USOST, HTTP introduction, +UFTP, +UFTPC, +UHTTP, +UHTTPC, +UHTTPER, +UGPS, +UGSRV, +ULOCGNSS, +UDCONF=31, Wi-Fi introduction
R29	19-Jun-2015	Ipah	Extended the document applicability to LISA-U200-03S, LISA-U201-03S, SARA-U260-03S, SARA-U270-03S, SARA-U280-03S product versions New commands: +UEMC, +UEMN, +UDCONF=82, +CAEMLPP, +CPPS, +CAAP, +USIMSTAT, +UBIP, +UNFM, +UNFMCONF, +URPM, +UNVMPLMN, +UNVMMCC, +UFACTORY, +UCEDATA, +UCTS, +USOSEC, +UDCONF=10, +USECMNG, +USECPRF, +UHTTPAC, +ULOCIND, +ULOCAID, +UDCONF=70, +CMOLRE, +CMOLR, +ULCSEVT, +CMTLR, +CMTLRA

Revision	Date	Name	Comments
			Modified commands: +CGSN, +CSGT, +COPS, +UCELLINFO, +CGED, +URAT, +CSQ, +CLCK +CPBW, +UCMGP, +CNMI, +CGSMS, +CCWA, +CUSD, +UDCONF=50, D*, +UNVMPLMN, +UCEDATA, +UUSBCONF, GPIO Introduction, +UGPIOC, File System Introduction, +UEXTDCONF, +UPLAYFILE, +USOWR, +UFTPC, +ULOC, +UECALLSTAT, +UECALLVOICE, +UECALLDATA, +UDCONF=67
R30	22-Jul-2015	Ipah	Objective Specification status Extended the document applicability to TOBY-L200-02S, TOBY-L210-0 2S, MPCI-L200-02S, MPCI-L210-02S product versions New commands: +UVGC, +UAPT, +UWWEBUIFTP Modified commands: +CMUX, H, +CSNS, +CIND, +COPS, +UBANDSEL, +UDCONF=81, +CGED, +UMNOCONF, +UCELLLOCK, +UIMSCONF, +CPMS, +CMGF, +CNMI, +ICF, +IPR, +UCATENV, +UCATTR, +URCATE, +URCATR, +STKPRO, <APN>, +UCGDFLT, +URING, +UDATACHANNEL, +USOSEC, GPIO Introduction, +UGPIOC, +URDFILE, +UPAR, +UGSRV, +ULOCIND, +ULOCGNSS, LCS, +ULCSEVT, +CMOLRE, +CMOLR, +CMTLR, +CMTLRA, +UDCONF=70, +UIPROUTE, Web User Interface (WebUI), Audio interface introduction, +UAPT, +USTN, +UVGC, +UI2S, +UMCLK, +USPM, +UTGN
R31	14-Aug-2015	Ipah	Early Production Information status Extended the document applicability to LISA-U200-83S, LISA-U270-68S, SARA-U270-53S product versions Extended the document applicability to TOBY-L210-60S and MPCI-L210-60S product versions Modified commands: +CMUX, +CGSN, +CFUN, +CIND, +CSNS, +COPS, +CREG, +CGED, +CPOL, +UCELLINFO, +UDCONF=20, +UFDAC, +UMNOCONF, +USIMLCK, +CPBW, +FCLASS, \Q, &K, +ICF, +IFC, +UDCONF=50, <cid>, <PDP_addr>, <type_of_service_(tos)_(ipv4)_and_mask-traffic_class_(ipv6)_and_mask>, <flow_label (ipv6)>, <PDP_Type>, +CEUS, +UCGDFLT, D*, +UCGCLASS, +UCLASS, +UPSD, +USTS, +UPSV, +UTEST, +UUSBCONF, +UFACTORY, File tags, File System limits, GPIO Introduction, +UGPIOC, +UPAR, +USAR, +UTGN, +UDCONF=30, Audio parameters tuning introduction, IPv4/IPv6 addressing, +USOSO, +USOCO, +USOCTL, +USOLI, +UFTP, +USORF, +USOST, +UHTTP, +UHTTPC, +ULOC, +ULOCIND, +UGUBX, +CMOLR, +ULCSEVT, Wi-Fi Introduction, +UWAPCFG Review the command applicability for these commands: +UNVMMCC, +USPM, +UIPCHGN, +UDCONF=4
R32	14-Sep-2015	Ipah	Advance Information status New commands: +UFGI, KTDEVSTAT, KTCFUN, KTUBXCONF, KTUCALLREJ, *KTF*OPENING, KTUUMTSENV, +USIMATR Modified commands: AT Commands Settings, +CGSN, +GSN, +CALA, +CALM, +UPROGRESS, +COPS, +URAT, +UCELLLOCK, +CEMODE, +UFWUPD, +UANT, +UTEST, +UDCONF=40, +UFACTORY, +UDCONF=30, +UVGC, IPv4/IPv6 addressing, +USOWR, +USOST, +UDCONF=7, +USOAO, +UFTP Review the command applicability for these commands: +CSVM, +CCWE, +UPROGRESS, L, M, P, T, +UCELLLOCK, +CGED, +ULTECAT, +UMNOCONF, +UMNOPLMN, +CASIMS, +UIMSCONF, +UIMSRCONF, +CIREG, +UANT, +UI2CC, +UI2CO, +UI2CR, +UI2CW, +UI2CREGR
R33	23-Sep-2015	Ipah	New commands: +UWREGBLOCK Modified commands: +UPROGRESS, +UCELLLOCK, +FCLASS, +UCATPROI, +UCATPRON, +UCATTR, +CGDATA, +UANT, File Tags Introduction, +UDCONF=30, +UFTPC, +UDCONF=31, +UWWEBUI, +UWAPCFG Review the command applicability for these commands: +VTS, +UVTS, D*, +UDATACHANNEL, +UDCONF=40, +UDTMFD,
R34	12-Oct-2015	Ipah	Extended the document applicability to TOBY-L280-02S, MPCI-L280-02S

Revision	Date	Name	Comments
			Modified commands: Information text responses and result codes, Operational restrictions, +CMUX, +CIND, +CEER, +UCEER, D, +CSQ, +CESQ, +COPS, +UHSDUPA, +UMNOCONF, +UMNOPLMN, +URAT, +UBANDSEL, +CPLS, +CLCK, +CHLD, +ICF, +CSIM, +CRSM, +UUICC, +CCHO, +UCATPRON, +UDTMF, Introduction and common parameters definition, <cid>, <PDP_Type>, +UCGDFLT, +UAUTHREQ, +CGDSCONT, +CGDATA, +CGACT, D*, +UDCONF=9, +UFWINSTALL, +UFWUPD, +UDCONF=40, +UUSBCONF, +UI2S, +UPAR, +UPLAYFILE, +UTGN, TCP/IP UDP/IP Introduction, +USOLI, +USORF, +USODL, +USOCTL, +UHTTP, +UHTTPC, +UI2CO, +UIPROUTE, +UIPADDR, +UWCFG, Review the command applicability for these commands: +UAUTHREQ, D*,
R35	30-Nov-2015	Ipah	Early Production Information status Modified commands: AT command settings, +CMUX, +CPAS, +CIND, +CTZU, +CSTA, S0, +COPS, +UCD, +UMNOCONF, +CGED, +UCGED, +UMNOPLMN, SMS Introduction, +CPMS, &D, +CCFC, &K, +ICF, +IFC, \Q, +IPR, O, +CGSMS, +CGCLASS, D*, +CGPIAF, +CGDATA, +UPSD, +UDCONF=40, +UDCONF=66, +UPSV, +UNFMCONF, GPIO Introduction, +UGPIOC, +UMCLK, +UPLAYFILE, +UHFP, +USODL, +UFTP, +UGPRF, +ULOC, +UGSRV, +UDTMFD, +UDCONF=31, +USAPIND, +USAPMODE, +UIPADDR, Web User Interface (WebUI), +UWCFG, +UWAPCFG, +UWREGBLOCK Review the command applicability for these commands: +CASIMS, +UIMSCONF, +UIMSRCONF, +CIREG, +UDCONF=31
R36	15-Dec-2015	Ipah	Extended the document applicability to SARA-G340-02S, SARA-G350-02S, SARA-G350-02X, SARA-G350-02A, LISA-U201-83S, MPCI-L201-01S Modified commands: +CSCS, +CFUN, +CIND, +CSQ, +COPS, +URAT, +UBANDSEL, +CGED, +UCD, +UMNOCONF, +CPOL, +WS46, +UIMSCONF, +CLCK, +CPWD, +CPBS, +CPBW, +CPBR, +CPBF, +CGSMS, +CNMI, +CAOC, +CCFC, +CCUG, +CCWA, +CHLD, +CLIP, +CLIR, +CNAP, +COLP, +COLR, +CSSN, +CTFR, +CUSD, +CUUS1, &K, &S, \Q, +IFC, <PDP_Type>, +CGDCONT, D*, +UPSD, +CGEREP, +UFWUPD, +UPSV, +UFACTORY, GPIO Introduction, File System Introduction, +UDWNFILE, +UI2S, +USPM, +UVGC, +UFTPC, +ULOCAID, Web User Interface (WebUI) Review the command applicability for these commands: +CGED, +CAEMLPP, +CPPS, +CAAP, \Q, &K, &S
R37	29-Jan-2016	Ipah	Document status updated to Early Production Information Modified commands: Command line, +CMUX, +CEER, S0, +UCELLLOCK, +UCGED, +CPBS, +CPBR, +CPBF, +CPBW, SMS Introduction, +CNMI, +CMGW, &D, &K, +IFC, \Q, +IPR, O, +UTPB, +UPSD, +UPSDA, +CGACT, +CGDATA, D*, +UPSV, +UPLAYFILE, +UHFP, +USODL, +USECPRF, +UFTPC, +UPING, +UI2CR, +UI2CREGR, +UI2CC, +UIPADDR, +UWAPCFG, +UWREGBLOCK, Internal TCP/UDP/IP stack class error codes
R38	16-Feb-2016	Ipah	Document status reverted to Advance Information. Extended the document applicability to TOBY-L210-62S New commands: +CNEM, +CSSAC Modified commands: &H, +VTS, S0, +COPS, +URAT, +UHSDUPA, +UBANDSEL, +WS46, +UMNOCONF, +UIMSCONF, +UIMSRCONF, &V, <APN>, PPP, D*, +CGACT, +UCGCLASS, +UCLASS, +CEMODE, +UCGDFLT, +URXDIV, +UFACTORY, +UDCONF=40, +UDCONF=60, +UDCONF=30, +UDTMFD, +UDCONF=70 Review the command applicability for this command: +VTD
R39	31-Mar-2016	Ipah	Extended the document applicability to SARA-U260-00S-01, SARA-U270-00S-01 and TOBY-L220-02S. Removed the document applicability to SARA-U260-00S-00 Modified commands: Summary table, +CSCS, +CMOD, +UVTS, +COPS, +CGED, +ULTECAT, +UMNOCONF, +CLCK, +CPBW, &V, <PDP_Type>, <IM_CN_Signalling_Flag_Ind>, PPP LCP handshake behaviour, D*, +CGDCONT, +CGDSCONT, +CGCONTRDP, +CGSCONTRDP, +UCGDFLT, +UCGCLASS, +CGEREP, +CGCMOD, +UFWINSTALL, +UFWUPD, +UDCONF=66, KTUUMTSENV, +UAPT, +UVGC, +UTGN, +UPAR, +USECPRF, +UHTTPC, +UIPADDR, +UDPDP, Wi-Fi introduction,

Revision	Date	Name	Comments
			+UWSTAIPCFG, +UWAPCFG, +UWAPIPCFG, +UWAPMACADDR, +UWAPSTALIST, +UWCFG, +UWFWRESET, +UWMP, +UWREGBLOCK, +UWSCAN, +UWSTACFG, +UWTEST, +UWWEBUI, +UWWEBUIFTP Review the command applicability for this command: +UDTMF Updated estimated response time information for these commands: +UWCFG, +UWAPCFG, +UWSTACFG
R40	26-Apr-2016	Ipah	Extended the document applicability to TOBY-L210-60S-01, MPCI-L210-60S-01 New commands: +CISRVCC, +COPS, +UMNOCONF, +CAVIMS, +CMMIVT Modified commands: +CPOL, +CASIMS, +USIMSTAT, +UDCONF=50, +CGEREP, +UGAOP, +UGUBX
R41	18-May-2016	Ipah	Document reverted to Objective Specification status Extended the document applicability to SARA-G300-00S-01, SARA-G310-00S-01, LISA-U201-03A, LISA-U270-63S New commands: +UBIPAPN, +UDCONF=11, +UOMADM, +UOMADMALERT, +UOMADMREP Modified commands: +URAT, +CGED, +UCGED, +CLCK, +CRLP, +UCATPROF, <PDP_addr>, +CGDCONT, +UCTS, Audio interface introduction, +UMGC, +USGC, +USECMNG, +USECPRF, +UFTPC, +UDTMFD, eCall Introduction, +UECALLVOICE, +UECALLDATA, +CECALL, Networking introduction, +UDPDP, Mobile termination error result codes +CME ERROR, Internal TCP/UDP/IP stack class error codes
R42	24-Jun-2016	Ipah	Document updated to Advance Information status Modified commands: Summary table, AT Commands Settings, General Operations, +UBANDSEL, +CNEM, +UMNOCONF, +CVDP, +CEVDP, +UIMSCONF, +UIMSRCONF, +CASIMS, +CPBS, +CPMS, V, +USIMSTAT, +CGEREP, +UFGI, +CGAUTO, +USTS, File System limits, +ULSTFILE, +UDBF, +USOWR, +USOST, +USECMNG, +USECPRF, +UFTPC, +UHTTPC, +USMTPM, +UGAOP, +UWTEST Review the command applicability for these commands: +UCALLSTAT, +CGED, +CCWA, +CAEMLPP, +CPPS, +CAAP, +UNVMPLMN, +UNVMMCC
R43	05-Aug-2016	Ipah	Document status updated to Early Production Information Extended document applicability to LISA-U200-62S-02 and SARA-G340-02X Modified commands: AT Commands Settings, +CMUX, +CGSN, +CMER, +CTZR, +CISRVCC, +CMOD, S0, +COPS, +CSQ, +UBANDSEL, +CGED, +UCGED, +UHSDUPA, +UMNOCONF, +UMNOPLMN, +URAT, IMS Introduction, +UIMSCONF, +UIMSRCONF, SMS Introduction, Class 0 SMS, SMS limitations, +CMGR, +CMGD, +CNMI, O, &D, &K, +ICF, +IFC, +IPR, \Q, +CSIM, +CRSM, +UDCONF=50, +CGLA, +CRLA, <cid>, <d_comp>, <h_comp>, +CGDCONT, D*, +CEMODE, +CEUS, +CEREG, +UAUTHREQ, +UCGDFLT, +CGDATA, +CGPADDR, +CGDEL, +UCLASS, +UFWUPD, +UPSV, +UOMADM, +UOMADMALERT, +UOMADMREPGPIO Introduction, +UGPIOC, File System Introduction, +UDWNFILE, +USODL, +USECPRF, +USTN, +UHFP, +USOCR, +UFTP, +UFTPC, +UHTTP, +UGPRF, +UGSRV, +UDTMFD, Wi-Fi Introduction, Web User Interface (WebUI), +UWAPCFG, +UWAPIPCFG, +UWCFG, +UWSCAN, +UWSTACFG, +UWSTAIPCFG, Mobile termination error result codes +CME ERROR Review the command applicability for these commands: +UDCONF=11, +UDCONF=9, +UCGATT
R44	22-Sep-2016	Ipah	Document status reverted to Advance Information Extended document applicability to MPCI-L201-02S, TOBY-L201-02S, TOBY-R202-02B New commands: +UCSG, +UIMSCFG, +UIMSREG, +UPCO, +UDNS, +USPEECHINFO

Revision	Date	Name	Comments
			Modified commands: AT command line, AT Commands Settings Notes, +CSQ, +CALA, +CIND, +URAT, +IPR, +UDCONF=50, PPP LCP handshake behaviour, +UCGDFLT, +CGEQOSRDP, +UDNS, +CEMODE, +UFWUPD, +UOMADM, +URING, +UDCONF=30, +USOCR, +USOWR, +USOST, +USECMNG, +UHTTPC, +USMTPM, +UI2CO, +UIPCONF, UWSTACFG, +UWSTAIPCFG, +UWAPIPCFG
R45	21-Oct-2016	Ipah	Extended the document applicability to TOBY-L280-72S, MPCI-L220-02S, MPCI-L280-72S Modified commands: +CALA, +CFUN, +CPOL, +URAT, +UMNOCONF, +UMNOPLMN, +CLCK, SMS Introduction, +CNMI, &K, +ICF, +IFC, \Q, +UCATPRON, +UCGDFLT, +CGEREP, +UPSV, GPIO Introduction, +USECPRF, +UFTPC
R46	18-Nov-2016	Ipah	Extended the document applicability to LARA-R204-02B, TOBY-L200-00S-01, MPCI-L200-00S-01 New commands: +VZWAPNE, +VZWRSRP, +VZWRSRQ Modified commands: +CFUN, +CSGT, +CTZU, +COPS, +URAT, +CNEM, +UCELLINFO, +UDCONF=20, +WS46, +CLIP, +CLIR, +COLP, +COLR, <cid>, +CGDCONT, +CGQMIN, +CGACT, +CGPADDR, +UANT, +URXDIV, +UTEST, +UNVMPLMN, +UNVMMCC, +UOMADMALERT, +UFACTORY, GPIO Introduction, +USPM, +UEXTDCONF, +UMCLK, LARA-R2 / TOBY-R2 Audio interface, SARA-U2 Audio interface, LISA-U2 Audio interface, +UDYNDNS, +UWCFG Review the command applicability for these commands: +CSNS, +CGED, +VZWAPNE, +VZWRSRP, +VZWRSRQ, +CAEMLPP, +CPPS, +CAAP
R47	15-Dec-2016	Ipah	"Disclosure restriction" replaces "Document status" on page 2 and document footer New commands: +UDCONF=12, Modified commands: +CISRVCC, +VTS, +COPS, +UEONS, +UMNOCONF, +CPOL, +UIMSCFG, +UCMGS3GPP2, +CLCK, +CPBW, +UFGI, +UFACTORY, +UTEST, +UUSBCONF, +UOMADMREP, +UEXTDCONF Review the command applicability for these commands: +CNEM, +CSSAC, +UMNOCONF, +CISRVCC, +CAVIMS, +CASIMS, +CIREG, +UIMSCONF, +UIMSRCONF, +CVDP, +CEVDP, +CACM, +URXDIV, +UOMADMREP
R48	10-Feb-2017	Ipah	Extended the document applicability to SARA-U270-03A Modified commands: URCs presentation deferring, I, +CFUN, +CMER, +CALA, +UDOPN, +UFDAC, +UDCONF=81, +CGED, +UCGED, +WS46, +UMNOCONF, +UIMSCFG, +UIMSREG, +UCMT3GPP2, +CNMI, +CMGR, +CMGL, +UCMGR, +UCMGL, +CCHO, +CGACT, +CGEREP, +CEREG, +CGCONTRDP, +UFWINSTALL, +UANT, +UTEST, +UNVMPLMN, +UGPIOC, +UPAR, +USAR, +UTGN, +UDCONF=30, +UHFP, +USOCR, +USOSO, +USOGO, +USOCL, +USOCO, +USOWR, +USOST, +USORD, +USORF, +USOLI, +USODL, +USOCTL, +USECMNG, +USAPIND, +UWREGBLOCK, +UWTEST Review the command applicability for these commands: +CSSAC, +UFDAC, +UDCONF=61, +UDCONF=30
R49	24-Feb-2017	Ipah	Extended the document applicability to LARA-R202-02B and LARA-R203-02B New commands: +CIREP Modified commands: +VTS, +CFUN, +COPS, +URAT, +UCGOPS, +UHSDUPA, +UCGED, +WS46, +UIMSCFG, S7, <cid>, <h_comp>, +CGDCONT, +UPSDA, +CGACT, +UCLASS, +UANT, +UOMADMALERT, +UOMADMREP, +UDCONF=30, LARA-R2 / TOBY-R2 Audio interface Review the command applicability for these commands: +UOMADM, +UOMADMALERT, +UOMADMREP, +UOMASTAT
R50	19-Apr-2017	Ipah	Extended the document applicability to SARA-U270-53S-01, MPCI-L220-62S, TOBY-L220-62S Modified commands: Information text responses and result codes, +CMER, +CFUN, +CISRVCC, +UCALLSTAT, +UPROGRESS, +CSQ, +CREG,

Revision	Date	Name	Comments
			+UMNOCONF, +UIMSCFG, +CMMIVT, +CIREP, +CLCK, +UPINCNT, +USIMSTAT, +UDCONF=54, +CCFC, +CCWA, +CGDCONT, +UCGATT, +CGACT, +UCLASS, +CGREG, +UCGDFLT, +UANT, GPIO mapping, Network status indication, File System limits, +UDCONF=30, +UI2S, +UFTP, +UDTMFD, +USAPMODE Review the command applicability for these commands: +CISRVCC, +CSTA, +UCALLSTAT, +UPROGRESS, +UEMC, +CASIMS, +CAVIMS, +CLCK, +CCFC, +CCWA, +CLIR, +CLIP, +CAOC, +CCWE, +CHLD, +CLCC, +CBST, +UDCONF=32, +FCLASS, +CR, +CRC, +CRLP, +UDCONF=54, +URXDIV, +UDCONF=40,
R51	31-May-2017	Ipah	New commands: +UDAMCFG Modified commands: AT command settings, General operation, I, +CIND, +CEER, D, +COPS, +URAT, +CGED, +UIMSCFG, +CEVDP, +CLCK, +CPBS, +CPBW, SIM toolkit introduction, +UBIP, D*, +CEMODE, +CGCONTRDP, +UDNS, +UGCNTRD, +UGCNTSET, +UFWINSTALL, +URXDIV, GPIO Introduction, +USOCO, +UIPROUTE, +CEER error result codes Review the command applicability for these commands: +UDCONF=20, +UBIP, +UOMASTAT
R52	30-Jun-2017	Ipah	Extended document applicability to SARA-G350-02X, TOBY-L200-03S, TOBY-L210-03S, TOBY-L280-03S, MPCI-L200-03S, MPCI-L210-03S, MPCI-L280-03S New commands: +UDCONF=33 Modified commands: +CMUX, I, +UPROGRESS, +CPAS, +CSGT, +CTZU, +CSQ, +COPS, +URAT, +UCGOPS, +CPOL, +UCGED, +UMNOCONF, +UMNOPLMN, +VZWAPNE, +CLCK, +CPBS, +CPBW, +CHLD, SMS Introduction, +CNMI, &K, +ICF, +IFC, \Q, +CRSM, +CRLA, +UCATPRON, +CGDCONT, +UCGATT, +UCGDFLT, +UPCO, +UDNS, +CGANS, +UFWUPD, +UOMADMREP, +UPSV, GPIO Introduction, Network status indication, +UI2S, Internet protocol transport layer, +USOCO, +USECPRF, +UFTPC, +UGPRF, +ULOCCELL, Error result codes Updated estimated response time information for these commands: +UCMGR, +UCMGP, Review the command applicability for these commands: +UFGI, +UGPS, +UGIND, +UGPRF, +UGAOP, +UGAOF, +UGSRV, +UGAOS, +UGUBX, +UGTMR, +UGZDA, +UGGGA, +UGGLL, +UGGSV, +UGRMC, +UGVTG, +UGGSA, +ULOC, +ULOCIND, +ULOCAID, +ULOCGNSS, +ULOCCELL
R53	14-Jul-2017	Ipah	Extended document applicability to LARA-R220-62B Modified commands: AT Command Settings, URCs presentation deferring, +CMUX, +CGSN, +CFUN, +CEER, +CALA, D, A, +VTD, +VTS, +UVTS, +UPROGRESS, +COPS, +UNVMMCC, +UNVMPLMN, +UHSDUPA, +URAT, +WS46, +CPBS, +CPBR, +CNMI, +CMGL, +CLIP, +COLP, +COLR, &K, +IFC, Packet switched parameter definition, PPP, +CGDCONT, +UPCO, +UDNS, +CGQREQ, +CGQMIN, +CGATT, +CGACT, +CGANS, +UCLASS, +CGEREP, +CGEQREQ, +CGEQMIN, +CGEQNEG, +CGDSCONT, +CEMODE, +CGTFTRDP, +CGSCONTRDP, +CGCONTRDP, +CGEQOS, +CGEQOSRDP, +CGTFT, +UANT, GPIO introduction, +UGPIOC, +UDCONF=30, Audio parameters tuning introduction, FTP, HTTP, +UGUBX, +ULOCCELL, +UDTMFD, +USAPMODE, Error result codes, +CEER error result codes
R54	25-Sep-2017	Ipah	Extended the document applicability to SARA-U201-63B, SARA-U201-04A, SARA-U201-04B, SARA-U201-04X, LARA-R280-02B, TOBY-R200-02B-01, TOBY-R202-02B-01 Modified commands: AT Commands Settings, Concatenation of AT commands, S-parameters, +CMUX, +CFUN, +CTZR, +CLCC, +COPS, +UMNOCONF, +UCGED, +UEONS, +URPM, +UNFM, +UNFMCONF, +UIMSCFG, +CMGS, +CMGW, +CSMP, &D, &K, +IFC, \Q, O, +STKPROF, <cid>, +CGDATA, +UPSD, +CGATT, +CGDSCONT, +CGQMIN, +CGACT, +CEREG, +UCLASS, +CGTFT, +CGQREQ, +CGTFTRDP, +UREG, Multiple PDP contexts, +UFWUPD, +UPSV, +USIO, GPIO introduction, +UPLAYFILE, +USTOPFILE, +UEXTDCONF, +UHFP, +UDNSRN, Internet protocol transport layer, +USOCR, +USOCO, +USOST, +USODL,

Revision	Date	Name	Comments
			+USECPRF, USECMNG Notes, +UHTTP, Ping Introduction, +UGPS, +UGIND, +UGPRF, +UGAOP, +UGAOF, +UGSRV, +UGAOS, +UGUBX, +UGTMR, +UGZDA, +UGGGA, +UGGLL, +UGGSV, +UGRMC, +UGVTG, +UGGSA, +ULOC, +ULOCIND, +ULOCAID, +ULOCGNSS, +ULOCCELL, +UI2CO, FTP class error codes Updated estimated response time information for these commands: +CMGR, +CMSS, +UCMGP, +UCMGR, +USOSEC, +USOCL, +USOWR, +USOST, +USORD, +USORF, +USOLI, +USODL, +USMTPM, +USMTPC Review the command applicability for these commands: +CISRVCC, +UMNOCONF, +CNEM, +CSSAC, +CIREG, +CIREP, +CASIMS, +CAVIMS, +CMMIVT, +CVDP, +CEVDP, +UISMS, +UDCONF=60, +UGPS, +UGIND, +UGPRF, +UGAOP, +UGAOF, +UGSRV, +UGAOS, +UGUBX, +UGTMR, +UGZDA, +UGGGA, +UGGLL, +UGGSV, +UGRMC, +UGVTG, +UGGSA, +ULOC, +ULOCIND, +ULOCAID, +ULOCGNSS, +ULOCCELL
R55	15-Oct-2017	Ipah	Modified commands: Summary table, Information text responses and result codes, Auto-registration, +CFUN, +CEER, +COPS, +CGED, +UCELLINFO, +CPMS, Supplementary services introduction, +UDCONF=32, +UDCONF=66, +UPSD, +CGEREP, +CEMODE, +UAUTHREQ, SARA-U2 audio interface, +ULGASP, +UHFP, +UTIME, +UIPTABLES, +UWSTAIPCFG, Review the command applicability for these commands: +CSVM, +CNEM, +CSSAC, +CLCK, +USPM
R56	22-Nov-2017	Ipah	Extended document applicability to TOBY-L4 series New commands: +UJAD, +UACT, +UTI, +UMAFE, +USAFE, +UMSEL Modified commands: +CFUN, +CREG, +FCLASS, +CRC, +CGDCONT, +UDNS, +CGACT, +CGREG, +UAUTHREQ, +UFWINSTALL, +UFWUPD, +URXDIV, +UTEST, +URING, +UFACTORY, File System Introduction, +UDWNFILE, +URDFILE, +USPM, +UI2S, +UI2S, Audio interface introduction, +UTIME
R57	16-Mar-2018	Ipah	Extended document applicability to TOBY-L210-03A and new LISA-U2 / SARA-U2 type numbers New commands: +URPMCONF Modified commands: Command line, Start-up and initialization, +CFUN, +CCLK, +CRSL, +CMEE, +CTZU, +CSQ, +CESQ, +CREG, +COPS, +URAT, +UHSDUPA, +UCSDETACH, +UMNOCONF, +CPOL, +CNEM, +UDCONF=20, +UCGED, +UCELLINFO, +UNFMCONF, +UIMSCFG, +CPWD, +CPBS, SMS Introduction, +CNMI, +CGSMS, +UETWCFG, +UETWNTFYSTART, +UETWNTFYSTOP, +UDCONF=50, V24 control and V25ter introduction, &K, +ICF, +IFC, \Q, <APN>, D*, +CGDCONT, +CGREG, +UCGATT, +CGACT, +UCGDFLT, +UGCNTSET, +UDCONF=9, +STKTR, +STKCNF, +UBIP, +UCATPRON, +UFWINSTALL, +UFWUPD, +UTEST, +UDCONF=40, File System Introduction, +UDWNFILE, +URDFILE, +USPM, +UI2S, Audio interface introduction, +UMGC, +USGC, +UMAFE, +UFTPC, +UGPRF, +USAPMODE, +UIPTABLES, +UWSTACSQ, +UWMP, +UWTEST, Saving AT commands configuration Review the command applicability for these commands: DL, +UDCONF=20, +PACSP, +CGED, +UCELLINFO, +URPM, +UMGC, +USGC,
R58	30-Apr-2018	Ipah	Extended document applicability to LARA-R202-02B-01, LARA-R203-02B-01, LARA-R204-02B-01, LARA-R211-02B-01, LARA-R220-62B-01, LARA-R280-02B-01, LARA-R280-02B-02, TOBY-R200-02B-02, TOBY-R202-02B-02. New commands: +UDCONF=56, +UTEMP, +UDCONF=64. Modified commands: AT command settings, General Operations, Start up and initialization, +CGSN, +CFUN, +CIND, S0, +CSQ, +CESQ, +COPS, +URAT, +UDCONF=81, +UCGED, +UJAD, +UMNOCONF, +UIMSCFG, SMS introduction, +CSCB, +CLIR, +CRC, PPP, PDP contexts and parameter definition, <cid>, <PDP_addr>, +CGDCONT, +CGANS, +CGDATA, D*, +CGCMOD, +CGEQREQ, +CGEQMIN, +CGEQNEG, +CEREG, +UTEST, +USTS, +URING, GPIO Introduction, +UGPIOC, File System Introduction, +UDWNFILE, +URDFILE, +UDELFILE, +USPEECHINFO, DNS introduction, Internet protocol transport layer, +USOCL, +UIPCHGN, +USECMNG,

Revision	Date	Name	Comments
			+USECPRF, HTTP introduction, +UHTTP, FTP introduction, PING, +UGPS, +UGIND, +UGPRF, +UGAOP, +UGAOF, +UGSRV, +UGAOS, +UGUBX, +UGTMR, +UGZDA, +UGGGA, +UGGLL, +UGGSV, +UGRMC, +UGVTG, +UGGSA, +ULOC, +ULOCIND, +ULOCAID, +ULOCGNSS, +ULOCCELL, eCall Introduction, +UECALLDATA, +UECALLVOICE, +UECALLSTAT, +UI2CR, +UBMCONF, +UIPCONF, +UIPROUTE, +UWMP, Mobile termination error result codes +CME ERROR, Internal TCP/UDP/IP stack class error codes, FTP class error codes. Review the command applicability for these commands: +UCELLINFO, +UMNOCONF, +UDCONF=20, +UDCONF=57, +USTS, +USPEECHINFO, +UGPS, +UGIND, +UGPRF, +UGAOP, +UGAOF, +UGSRV, +UGAOS, +UGUBX, +UGTMR, +UGZDA, +UGGGA, +UGGLL, +UGGSV, +UGRMC, +UGVTG, +UGGSA, +ULOC, +ULOCIND, +ULOCAID, +ULOCGNSS, +ULOCCELL, +UDCONF=90.
R59	30-Sep-2018	lpah	Extended the document applicability to SARA-G450-00C, LISA-U200-0 1S-03, LISA-U200-03S-02, LISA-U200-52S-03, LISA-U200-62S-04, LISA-U230-01S-03, LISA-U270-63S-02. New commands: +USECCFG, +UECALLCFG, +UIFCONF. Modified commands: +CGSN, D, +CESQ, +COPN, +CHLD, +CGEREP, +UFWUPD, +USIO, +UDWNFILE, +UDCONF=30, +USPM, Audio interface introduction, +USECPRF, +UHTTPC, +UECALLDATA, +UECALLVOICE, +UECALLSTAT. Review the command applicability for these commands: +URPM, +URPMCONF, &W, &V, +USTS, +UOMADM, +UOMADMALERT, +UOMADMREP, +UOMASTAT, +UTEMP, +USPM, +USPEECHINFO, +USECMNG, +USECPRF, +UI2CO, +UI2CW, +UI2CR, +UI2CREGR, +UI2CC.
R60	15-Dec-2018	lpah	Extended the document applicability to SARA-U270-04B. New commands: +UFWSINSTALL. Modified commands: AT command settings, Profiles, +CMUX, &H, +CPAS, +CIND, +CCLK, +CALD, +CALM, +CRSL, +CTZU, +CLCC, H, +CMOD, S0, +CSVM, +CSQ, +COPS, +UNVMMCC, +COPN, +UJAD, +UMNOCONF, +UIMSCFG, +UPINCNT, +CLCK, +CPWD, +CCWA, +CLIR, +CHLD, +CNAP, +CRC, &D, &K, +IFC, \Q, +IPR, O, S2, &W, &V, +XSIMSWITCH, SIM toolkit introduction, <cid>, <PDP_Type>, +CGDCONT, +UPSD, +CGQREQ, +CGANS, +CGDATA, D*, +CGCLASS, +CGEQREQ, +CGDSCONT, +UAUTHREQ, +CGEQOS, +CGTFT, +UFGI, +UFWINSTALL, +UFWUPD, +UPSV, +UTEST, +USTS, +USIO, +UFACTORY, GPIO Introduction, +UGPIOC, +UDWNFILE, +URDFILE, File System limits, +UPLAYFILE, +URECFILE, +UAREC, +UEXTDCONF, +UMAAT, Audio parameters tuning Introduction, +UHFP, +UDNSRN, +USOSEC, +USODL, SSL/TLS Introduction, +USECMNG, +USECPRF, +USECCFG, +UFTP, +UHTTP, +UGPS, +UGPRF, +UGSRV, +UDTMFD, +UI2CO, +UBMCONF, +UIFCONF, +UIPROUTE, +UIPTABLES, +CEER error result codes, +UFWSINSTALL error result codes, Parameters stored in profiles. Updated estimated response time information for these commands: +XSIMSWITCH. Review the command applicability for these commands: A/, +CLAC, &H, +CPAS, +CALM, +CLCC, +CSTA, D, T, P, A, H, +CMOD, +CHUP, +UCALLSTAT, +VTD, +VTS, +USIMLCK, +CCFC, +CCWA, +CLIR, +CLIP, +COLP, +COLR, +CAOC, +CACM, +CAMM, +CPUC, +CHLD, +CSSN, +CNAP, +CR, +CRC, +UTPB, +USPEECHINFO, +USOSEC, +USOAO.
R61	15-Feb-2019	lpah	Extended the document applicability to SARA-U201-63B-02, TOBY-L20 0-03S-01, TOBY-L201-02S-01, TOBY-L210-03S-01, TOBY-L280-03S-01, MPCI-L201-02S-01. New commands: +UISS. Modified commands: +CFUN, +CMER, +CEER, D, +UCALLSTAT, +CSVM, +COPS, +UNVMMCC, +CREG, +PACSP, +CGED, +UMNOCONF, +VZWAPNE, +UIMSCFG, +UIMSCONF, +UICMGSMODE, +CPBS, +CPMS, +CPNER, Supplementary services introduction, &F, +UBIP, <PDP_Type>, +CGDCONT, +UDCONF=66, +CGATT, +CGDATA, +CGREG,

Revision	Date	Name	Comments
			+CGCONTRDP, +UFWSINSTALL, +UPSV, +UTEST, +USPM, +UAREC, +UEXTDCONF, +UHFP, +UMGC, +USGC, +UAPT, +UMAFE, +USAFE, +UMSEL, +USOCO, +USECMNG, +USECPRF, +UFTPC, +UHTTPC, +UECALLDATA, +UECALLCFG, +UBMCONF, Mobile termination error result codes +CME ERROR, Parameters stored in profiles. Updated estimated response time information for these commands: +UDNSRN, +USOCO. Review the command applicability for these commands: +CGDATA.

Contact

For complete contact information, visit us at www.u-blox.com.

u-blox Offices

North, Central and South America

u-blox America, Inc.
Phone: +1 703 483 3180
E-mail: info_us@u-blox.com

Regional Office West Coast:
Phone: +1 408 573 3640
E-mail: info_us@u-blox.com

Technical Support:
Phone: +1 703 483 3185
E-mail: support_us@u-blox.com

Headquarters

Europe, Middle East, Africa

u-blox AG
Phone: +41 44 722 74 44
E-mail: info@u-blox.com
Support: support@u-blox.com

Asia, Australia, Pacific

u-blox Singapore Pte. Ltd.
Phone: +65 6734 3811
E-mail: info_ap@u-blox.com
Support: support_ap@u-blox.com

Regional Office Australia:
Phone: +61 2 8448 2016
E-mail: info_anz@u-blox.com
Support: support_ap@u-blox.com

Regional Office China (Beijing):
Phone: +86 10 68 133 545
E-mail: info_cn@u-blox.com
Support: support_cn@u-blox.com

Regional Office China (Chongqing):
Phone: +86 23 6815 1588
E-mail: info_cn@u-blox.com
Support: support_cn@u-blox.com

Regional Office China (Shanghai):
Phone: +86 21 6090 4832
E-mail: info_cn@u-blox.com
Support: support_cn@u-blox.com

Regional Office China (Shenzhen):
Phone: +86 755 8627 1083
E-mail: info_cn@u-blox.com
Support: support_cn@u-blox.com

Regional Office India:
Phone: +91 80 4050 9200
E-mail: info_in@u-blox.com
Support: support_in@u-blox.com

Regional Office Japan (Osaka):
Phone: +81 6 6941 3660
E-mail: info_jp@u-blox.com
Support: support_jp@u-blox.com

Regional Office Japan (Tokyo):
Phone: +81 3 5775 3850
E-mail: info_jp@u-blox.com
Support: support_jp@u-blox.com

Regional Office Korea:
Phone: +82 2 542 0861
E-mail: info_kr@u-blox.com
Support: support_kr@u-blox.com

Regional Office Taiwan:
Phone: +886 2 2657 1090
E-mail: info_tw@u-blox.com
Support: support_tw@u-blox.com